Cat. No. W462-E1-07

SYSMAC CP Series
CP1L-L_D_
CP1L-M_D_

CP1L CPU Unit

OPERATION MANUAL

OMRON

CP1L-L10D□-□
CP1L-L14D□-□
CP1L-L20D□-□
CP1L-M30D□-□
CP1L-M40D□-□
CP1L-M60D□-□

CP1L CPU Unit

Operation Manual

Revised May 2010

Notice:

OMRON products are manufactured for use according to proper procedures by a qualified operator and only for the purposes described in this manual.

The following conventions are used to indicate and classify precautions in this manual. Always heed the information provided with them. Failure to heed precautions can result in injury to people or damage to property.

⚠DANGER Indicates an imminently hazardous situation which, if not avoided, will result in death or serious injury. Additionally, there may be severe property damage.

⚠WARNING Indicates a potentially hazardous situation which, if not avoided, could result in death or serious injury. Additionally, there may be severe property damage.

⚠Caution Indicates a potentially hazardous situation which, if not avoided, may result in minor or moderate injury, or property damage.

OMRON Product References

All OMRON products are capitalized in this manual. The word “Unit” is also capitalized when it refers to an OMRON product, regardless of whether or not it appears in the proper name of the product.

The abbreviation “Ch,” which appears in some displays and on some OMRON products, often means “word” and is abbreviated “Wd” in documentation in this sense.

The abbreviation “PLC” means Programmable Controller. “PC” is used, however, in some CX-Programmer displays to mean Programmable Controller.

Visual Aids

The following headings appear in the left column of the manual to help you locate different types of information.

Note Indicates information of particular interest for efficient and convenient operation of the product.

1,2,3... 1. Indicates lists of one sort or another, such as procedures, checklists, etc.

© OMRON, 2007

All rights reserved. No part of this publication may be reproduced, stored in a retrieval system, or transmitted, in any form, or by any means, mechanical, electronic, photocopying, recording, or otherwise, without the prior written permission of OMRON.

No patent liability is assumed with respect to the use of the information contained herein. Moreover, because OMRON is constantly striving to improve its high-quality products, the information contained in this manual is subject to change without notice. Every precaution has been taken in the preparation of this manual. Nevertheless, OMRON assumes no responsibility for errors or omissions. Neither is any liability assumed for damages resulting from the use of the information contained in this publication.

Unit Versions of CP-series CPU Units

Unit Versions

A “unit version” has been introduced to manage CPU Units in the CP Series according to differences in functionality accompanying Unit upgrades.

Notation of Unit Versions on Products

The unit version is given to the right of the lot number on the nameplate of the products for which unit versions are being managed, as shown below.

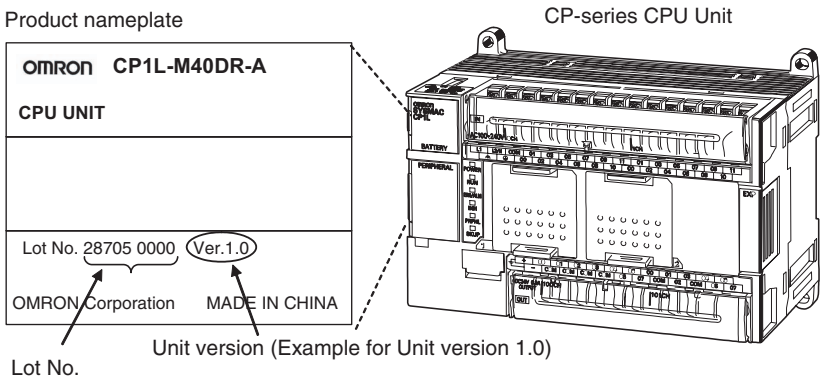

Confirming Unit Versions with Support Software

CX-Programmer version 7.3 or higher can be used to confirm the unit version of the CP1L CPU Unit with 10 I/O points.

CX-Programmer version 7.1 or higher can be used to confirm the unit version of the CP1L CPU Unit with 14, 20, 30, 40 or 60 I/O points.

Note CX-Programmer version 7.2 or lower cannot be used to confirm unit versions for CP1L CPU Units with 10 I/O points.

CX-Programmer version 7.0 or lower cannot be used to confirm unit versions for CP1L CPU Units with 14, 20, 30, 40 or 60 I/O points.

■ **Confirmation Procedure**

Procedure When the Device Type and CPU Type Are Known

1,2,3... 1. Set the *Device Type* Field in the Change PLC Dialog Box to *CP1L*.

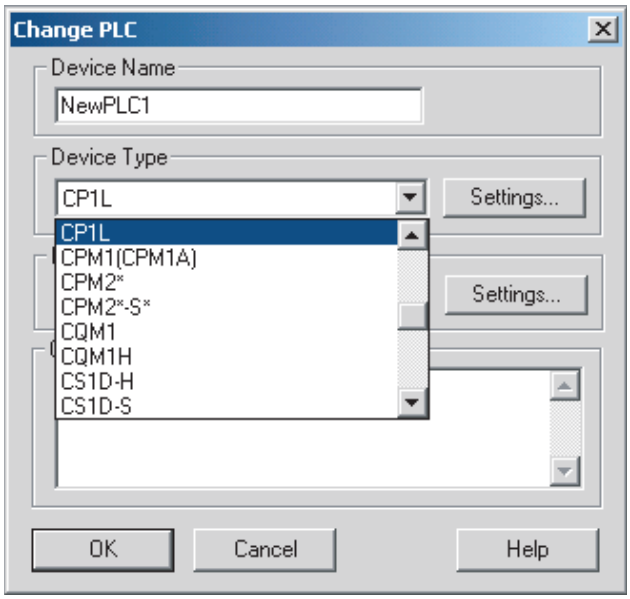

2. Click the **Settings** Button by the *Device Type* Field and, when the Device Type Settings Dialog Box is displayed, set the *CPU Type* Field to *J, L, L10* or *M*.

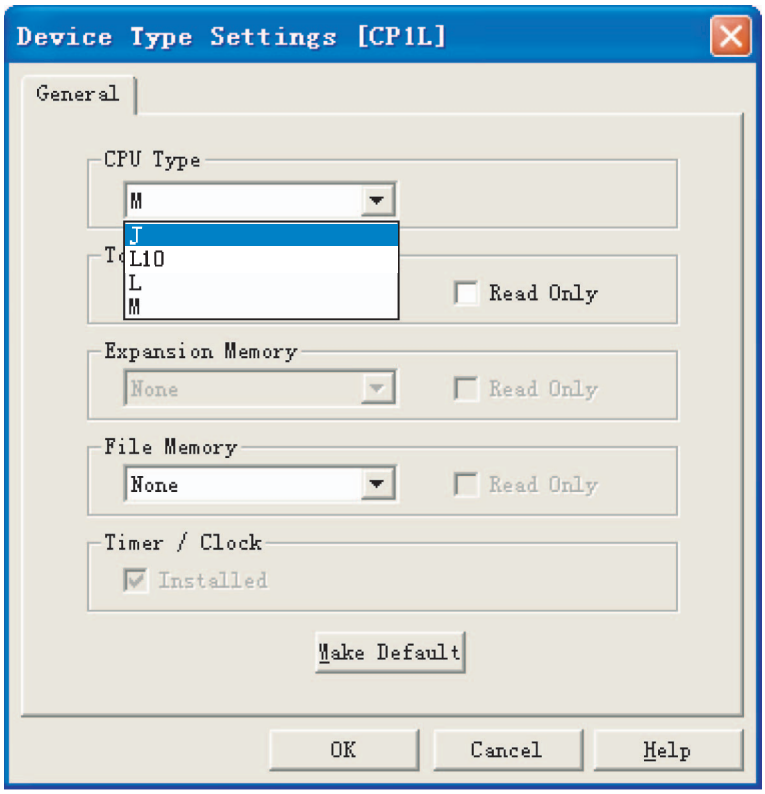

3. Go online and select ***PLC - Edit - Information***

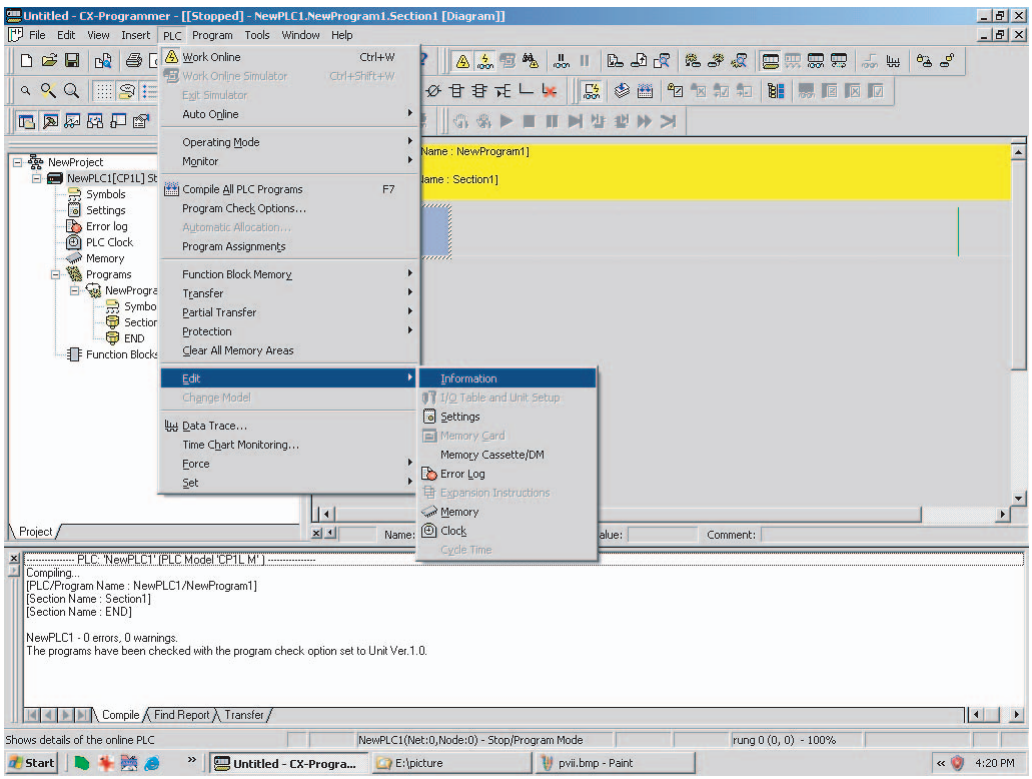

The PLC Information Dialog Box will be displayed.

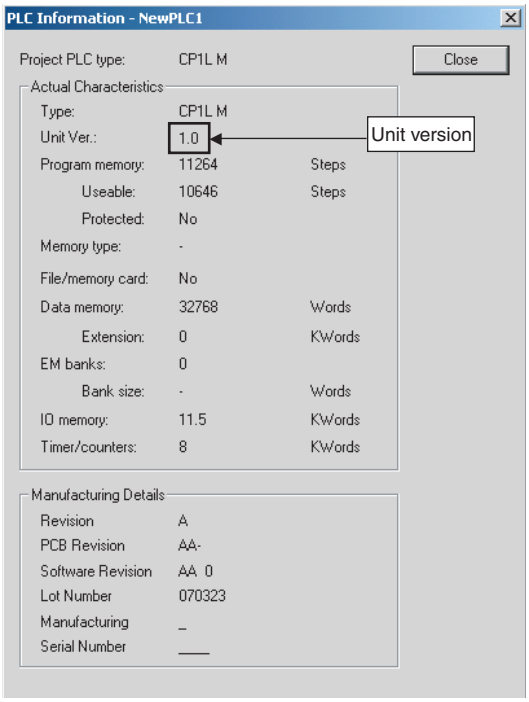

Use the above display to confirm the unit version of the CPU Unit.

Procedure When the Device Type and CPU Type Are Not Known

This procedure is possible only when connected directly to the CPU Unit with a serial connection.

If you don't know the device type and CPU type that are connected directly to the CPU Unit on a serial line, select ***PLC - Auto Online*** to go online, and then select ***PLC - Edit - Information*** from the menus.

The PLC Information Dialog Box will be displayed and can be used to confirm the unit version of the CPU Unit.

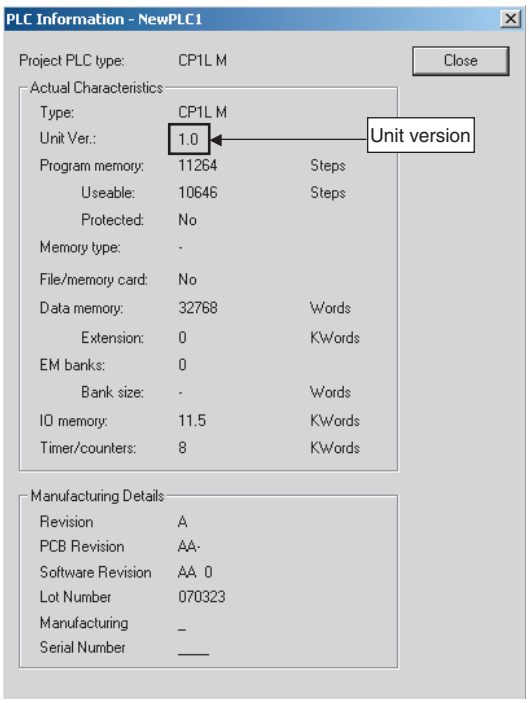

Using the Unit Version Labels

The following unit version labels are provided with the CPU Unit.

These labels can be attached to the front of previous CPU Units to differentiate between CPU Units of different unit versions.

Functions Supported by Unit Version for CP-series CPU Units

Functions Supported by Unit Version 1.0 and 1.1

Functionality is the same as that for CS/CJ-series CPU Units with unit version 3.0. The functionality added for CS/CJ-series CPU Unit unit version 4.0 is not supported.

CP1H CPU Units

- CX-Programmer version 6.11 or higher is required to use CP1H-X□□□□-□/XA□□□□-□ with unit version 1.1 or 1.0.
- CX-Programmer version 6.20 or higher is required to use CP1H-Y□□□□-□ with unit version 1.1.

CPU Unit		CP1H CPU Unit		
Model		CP1H-□□□□-□ CP1H-XA□□□□-□ (See note 1.)		CP1H-Y□□□□-□ (See note 2.)
Function \ Unit version		Ver. 1.1 or later	Ver. 1.0	Ver. 1.1
Pulse outputs	Allocated built-in I/O terminals	4 axes at 100 kHz	2 axes at 100 kHz 2 axes at 30 kHz	2 axes at 100 kHz
	Special pulse output terminals	None		2 axes at 1 MHz

Note
1. The unit version for the CP1H-X□□□□-□/XA□□□□-□ begins at 1.0.
2. The unit version for the CP1H-Y□□□□-□ begins at 1.1.
3. CX-Programmer version 7.11 or higher is required to use CP1L CPU Units with unit version 1.0.
4. CX-Programmer version 7.3 or higher is required to use CP1L CPU Units with 10 I/O points.

TABLE OF CONTENTS

PRECAUTIONS xxiii

1 Intended Audience xxiv
2 General Precautions xxiv
3 Safety Precautions xxiv
4 Operating Environment Precautions xxvi
5 Application Precautions xxvii
6 Conformance to EC Directives xxx

SECTION 1
Features and System Configuration 1

1-1 Features and Main Functions 2
1-2 System Configuration 15
1-3 Connecting the CX-Programmer 23
1-4 Function Charts 33
1-5 Function Blocks 34

SECTION 2
Nomenclature and Specifications 37

2-1 Part Names and Functions 38
2-2 Specifications 43
2-3 CP1L CPU Unit Operation 73
2-4 CPU Unit Operation 81
2-5 CPU Unit Operating Modes 85
2-6 Power OFF Operation 87
2-7 Computing the Cycle Time 89

SECTION 3
Installation and Wiring 99

3-1 Fail-safe Circuits 100
3-2 Installation Precautions 101
3-3 Mounting 103
3-4 Wiring CP1L CPU Units 110
3-5 Wiring CPU Unit I/O 118
3-6 CP/CPM1A-series Expansion I/O Unit Wiring 130

SECTION 4
I/O Memory Allocation 137

4-1 Overview of I/O Memory Area 138
4-2 I/O Area and I/O Allocations 145
4-3 1:1 Link Area 152
4-4 Serial PLC Link Area 153

TABLE OF CONTENTS

4-5 Internal Work Area 153
4-6 Holding Area (H) 154
4-7 Auxiliary Area (A) 155
4-8 TR (Temporary Relay) Area 155
4-9 Timers and Counters 156
4-10 Data Memory Area (D) 160
4-11 Index Registers 161
4-12 Data Registers 169
4-13 Task Flags 171
4-14 Condition Flags 171
4-15 Clock Pulses 173

SECTION 5
Pulse and Counter Functions 175

5-1 High-speed Counters 176
5-2 Pulse Outputs 197
5-3 Inverter Positioning 280

SECTION 6
Advanced Functions 337

6-1 Interrupt Functions 338
6-2 Quick-response Inputs 362
6-3 Serial Communications 366
6-4 Analog Adjuster and External Analog Setting Input 394
6-5 Battery-free Operation 395
6-6 Memory Cassette Functions 397
6-7 Program Protection 405
6-8 Failure Diagnosis Functions 414
6-9 Clock 418

SECTION 7
Using Expansion Units and Expansion I/O Units 421

7-1 Connecting Expansion Units and Expansion I/O Units 422
7-2 Analog Input Units 423
7-3 Analog Output Units 432
7-4 Analog I/O Units 440
7-5 Temperature Sensor Units 463
7-6 CompoBus/S I/O Link Units 478
7-7 DeviceNet I/O Link Units 484

TABLE OF CONTENTS

SECTION 8
LCD Option Board 491

8-1 Features 492
8-2 Specifications 493
8-3 Part Names 494
8-4 Installation and Removing 495
8-5 Basic Operation 496
8-6 LCD Option Board Function 501
8-7 Trouble Shooting 550

SECTION 9
Ethernet Option Board 553

9-1 Ethernet Option Board Function Guide 554
9-2 Features 557
9-3 System Configuration 558
9-4 Specifications 559
9-5 FINS Communications 560
9-6 Part Names 562
9-7 Comparison with Previous Models 563
9-8 Installation and Initial Setup 564
9-9 Memory Allocations 571
9-10 Web Browser Setup and Display 577
9-11 Trouble Shooting 588
9-12 Sample Application 592

SECTION 10
Program Transfer, Trial Operation, and Debugging 597

10-1 Program Transfer 598
10-2 Trial Operation and Debugging 598

SECTION 11
Troubleshooting 605

11-1 Error Classification and Confirmation 606
11-2 Troubleshooting 608
11-3 Error Log 617
11-4 Troubleshooting Unit Errors 618

SECTION 12
Inspection and Maintenance 621

12-1 Inspections 622
12-2 Replacing User-serviceable Parts 624

TABLE OF CONTENTS

Appendices 629

A Standard Models 629
B Dimensions Diagrams 635
C Auxiliary Area Allocations by Function 643
D Auxiliary Area Allocations by Address 665
E Memory Map 713
F Connections to Serial Communications Option Boards 715
G PLC Setup 741
H Specifications for External Power Supply Expansion 765

Index 767

Revision History 773

About this Manual:

This manual describes installation and operation of the CP-series Programmable Controllers (PLCs) and includes the sections described below. The CP Series provides advanced package-type PLCs based on OMRON's advanced control technologies and vast experience in automated control.

Please read this manual carefully and be sure you understand the information provided before attempting to install or operate a CP-series PLC. Be sure to read the precautions provided in the following section.

Definition of the CP Series

The CP Series is centered around the CP1H and CP1L CPU Units and is designed with the same basic architecture as the CS and CJ Series. Always use CP-series Expansion Units and CP-series Expansion I/O Units when expanding I/O capacity.

I/O words are allocated in the same way as the CPM1A/CPM2A PLCs, i.e., using fixed areas for inputs and outputs.

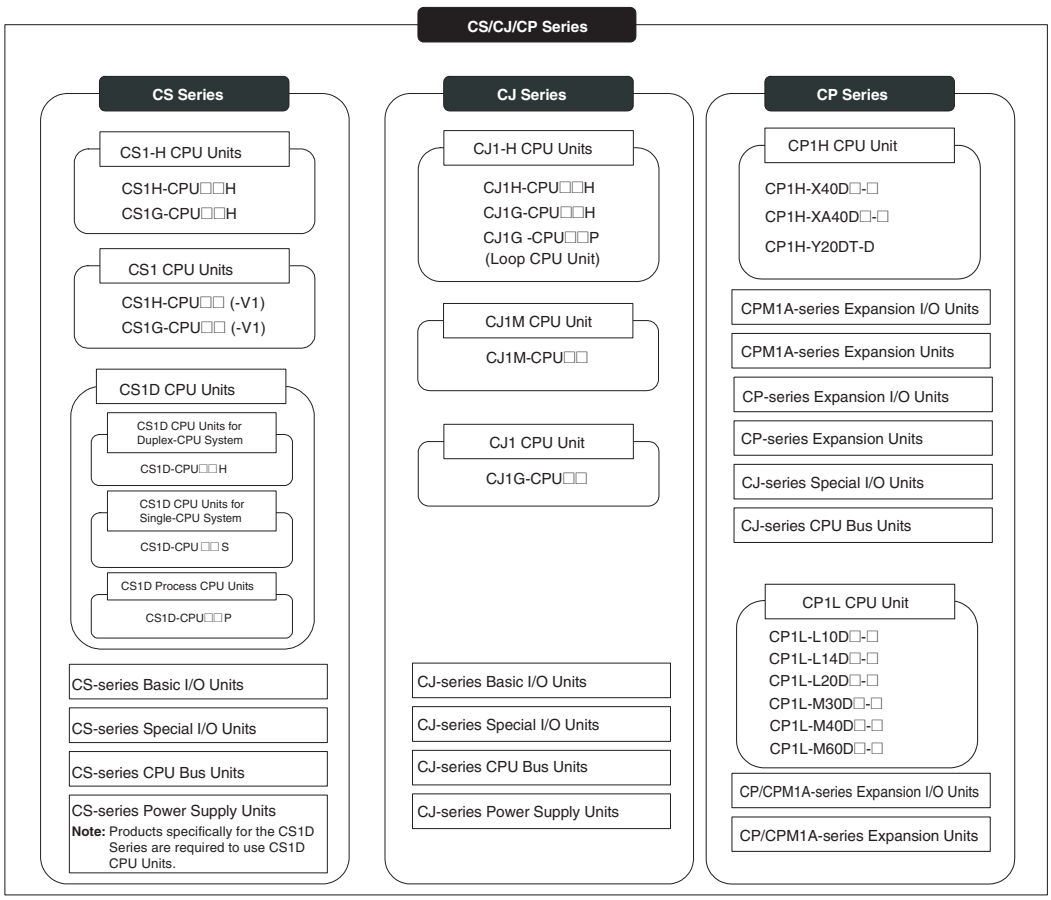

Precautions provides general precautions for using the Programmable Controller and related devices.

Section 1 introduces the features of the CP1L and describes its configuration. It also describes the Units that are available and connection methods for Programming Devices and other peripheral devices.

Section 2 describes the names and functions of CP1L parts and provides CP1L specifications.

Section 3 describes how to install and wire the CP1L.

Section 4 describes the structure and functions of the I/O Memory Areas and Parameter Areas.

Section 5 describes the CP1L's interrupt and high-speed counter functions.

Section 6 describes all of the advanced functions of the CP1L that can be used to achieve specific application needs.

Section 7 describes how to use CP-series Expansion Units and Expansion I/O Units.

Section 8 gives an outline of the LCD Option Board, explains how to install and remove the LCD Option Board, and describes the functions including how to monitor and make settings for the PLC. It also lists the errors during operation and provides probable causes and countermeasures for trouble-shooting.

Section 9 gives an outline of the Ethernet Option Board, explains how to install and remove the Ethernet Option Board, and how to monitor and make settings required for operation. It also lists the errors during operation and provides countermeasures for troubleshooting.

Section 10 describes the processes used to transfer the program to the CPU Unit and the functions that can be used to test and debug the program.

Section 11 provides information on hardware and software errors that occur during CP1L operation.

Section 12 provides inspection and maintenance information.

Appendices provide product lists, dimensions, tables of Auxiliary Area allocations, and a memory map.

Related Manuals

The following manuals are used for the CP1L CPU Units. Refer to these manuals as required.

Cat. No.	Model numbers	Manual name	Description
W462	CP1L-L10D□-□ CP1L-L14D□-□ CP1L-L20D□-□ CP1L-M30D□-□ CP1L-M40D□-□ CP1L-M60D□-□	SYSMAC CP Series CP1L CPU Unit Operation Manual	Provides the following information on the CP Series: • Overview, design, installation, maintenance, and other basic specifications • Features • System configuration • Mounting and wiring • I/O memory allocation • Troubleshooting Use this manual together with the *CP1L Programmable Controllers Programming Manual* (W451).
W451	CP1H-X40D□-□ CP1H-XA40D□-□ CP1H-Y20DT-D CP1L-L10D□-□ CP1L-L14D□-□ CP1L-L20D□-□ CP1L-M30D□-□ CP1L-M40D□-□ CP1L-M60D□-□	SYSMAC CP Series CP1H /CP1L CPU Unit Programming Manual	Provides the following information on programming the CP Series: • Programming methods • Tasks • Programming instructions
W461	CP1L-L10D□-□ CP1L-L14D□-□ CP1L-L20D□-□ CP1L-M30D□-□ CP1L-M40D□-□ CP1L-M60D□-□	SYSMAC CP Series CP1L CPU Unit Introduction Manual	Describes basic setup methods of CP1L PLCs: • Basic configuration and component names • Mounting and wiring • Programming, data transfer, and debugging using the CX-Programmer • Application program examples
W446	WS02-CXPC1-E-V73	SYSMAC CX-Programmer Ver. 7.2 Operation Manual	Provides information on installing and operating the CX-Programmer for all functions except for function blocks.
W447	WS02-CXPC1-E-V73	SYSMAC CX-Programmer Ver. 7.1 Operation Manual Function Blocks	Provides specifications and operating procedures for function blocks. Function blocks can be used with CX-Programmer Ver. 7.1 or higher and a CP1L CPU Unit. Refer to W446 for operating procedures for functions other than function blocks.
W463	CXONE-AL□□C-EV2 CXONE-AL□□D-EV2	CX-One Setup Manual	Provides an overview of and describes how to install the CX-One FA Integrated Tool Package.
W464		CX-Integrator Operation Manual	Describes operating the CX-Integrator, including operations to build networks (e.g., setting data links, routing tables, and Communications Units.

Cat. No.	Model numbers	Manual name	Description
W344	WS02-PSTC1-E	CX-Protocol Operation Manual	Provides operating procedures for creating protocol macros (i.e., communications sequences) with the CX-Protocol and other information on protocol macros. The CX-Protocol is required to create protocol macros for user-specific serial communications or to customize the standard system protocols.
W342	CS1G/H-CPU□□H CS1G/H-CPU□□-V1 CS1D-CPU□□H CS1D-CPU□□S CS1W-SCU□□-V1 CS1W-SCB□□-V1 CJ1G/H-CPU□□H CJ1G-CPU□□P CJ1M-CPU□□ CJ1G-CPU□□ CJ1W-SCU□□-V1	SYSMAC CS/CJ/CP/NSJ-series Communications Commands Reference Manual	Describes commands addressed to CS-series, CJ-series, and CP-series CPU Units, including C-mode commands and FINS commands. **Note** This manual describes on commands address to CPU Units regardless of the communications path. (CPU Unit serial ports, Serial Communications Unit/Board ports, and Communications Unit ports can be used.) Refer to the relevant operation manuals for information on commands addresses to Special I/O Units and CPU Bus Units.

Read and Understand this Manual

Please read and understand this manual before using the product. Please consult your OMRON representative if you have any questions or comments.

Warranty and Limitations of Liability

WARRANTY

OMRON's exclusive warranty is that the products are free from defects in materials and workmanship for a period of one year (or other period if specified) from date of sale by OMRON.

OMRON MAKES NO WARRANTY OR REPRESENTATION, EXPRESS OR IMPLIED, REGARDING NON-INFRINGEMENT, MERCHANTABILITY, OR FITNESS FOR PARTICULAR PURPOSE OF THE PRODUCTS. ANY BUYER OR USER ACKNOWLEDGES THAT THE BUYER OR USER ALONE HAS DETERMINED THAT THE PRODUCTS WILL SUITABLY MEET THE REQUIREMENTS OF THEIR INTENDED USE. OMRON DISCLAIMS ALL OTHER WARRANTIES, EXPRESS OR IMPLIED.

LIMITATIONS OF LIABILITY

OMRON SHALL NOT BE RESPONSIBLE FOR SPECIAL, INDIRECT, OR CONSEQUENTIAL DAMAGES, LOSS OF PROFITS OR COMMERCIAL LOSS IN ANY WAY CONNECTED WITH THE PRODUCTS, WHETHER SUCH CLAIM IS BASED ON CONTRACT, WARRANTY, NEGLIGENCE, OR STRICT LIABILITY.

In no event shall the responsibility of OMRON for any act exceed the individual price of the product on which liability is asserted.

IN NO EVENT SHALL OMRON BE RESPONSIBLE FOR WARRANTY, REPAIR, OR OTHER CLAIMS REGARDING THE PRODUCTS UNLESS OMRON'S ANALYSIS CONFIRMS THAT THE PRODUCTS WERE PROPERLY HANDLED, STORED, INSTALLED, AND MAINTAINED AND NOT SUBJECT TO CONTAMINATION, ABUSE, MISUSE, OR INAPPROPRIATE MODIFICATION OR REPAIR.

Application Considerations

SUITABILITY FOR USE

OMRON shall not be responsible for conformity with any standards, codes, or regulations that apply to the combination of products in the customer's application or use of the products.

At the customer's request, OMRON will provide applicable third party certification documents identifying ratings and limitations of use that apply to the products. This information by itself is not sufficient for a complete determination of the suitability of the products in combination with the end product, machine, system, or other application or use.

The following are some examples of applications for which particular attention must be given. This is not intended to be an exhaustive list of all possible uses of the products, nor is it intended to imply that the uses listed may be suitable for the products:

- Outdoor use, uses involving potential chemical contamination or electrical interference, or conditions or uses not described in this manual.
- Nuclear energy control systems, combustion systems, railroad systems, aviation systems, medical equipment, amusement machines, vehicles, safety equipment, and installations subject to separate industry or government regulations.
- Systems, machines, and equipment that could present a risk to life or property.

Please know and observe all prohibitions of use applicable to the products.

NEVER USE THE PRODUCTS FOR AN APPLICATION INVOLVING SERIOUS RISK TO LIFE OR PROPERTY WITHOUT ENSURING THAT THE SYSTEM AS A WHOLE HAS BEEN DESIGNED TO ADDRESS THE RISKS, AND THAT THE OMRON PRODUCTS ARE PROPERLY RATED AND INSTALLED FOR THE INTENDED USE WITHIN THE OVERALL EQUIPMENT OR SYSTEM.

PROGRAMMABLE PRODUCTS

OMRON shall not be responsible for the user's programming of a programmable product, or any consequence thereof.

Disclaimers

CHANGE IN SPECIFICATIONS

Product specifications and accessories may be changed at any time based on improvements and other reasons.

It is our practice to change model numbers when published ratings or features are changed, or when significant construction changes are made. However, some specifications of the products may be changed without any notice. When in doubt, special model numbers may be assigned to fix or establish key specifications for your application on your request. Please consult with your OMRON representative at any time to confirm actual specifications of purchased products.

DIMENSIONS AND WEIGHTS

Dimensions and weights are nominal and are not to be used for manufacturing purposes, even when tolerances are shown.

PERFORMANCE DATA

Performance data given in this manual is provided as a guide for the user in determining suitability and does not constitute a warranty. It may represent the result of OMRON's test conditions, and the users must correlate it to actual application requirements. Actual performance is subject to the OMRON Warranty and Limitations of Liability.

ERRORS AND OMISSIONS

The information in this manual has been carefully checked and is believed to be accurate; however, no responsibility is assumed for clerical, typographical, or proofreading errors, or omissions.

PRECAUTIONS

This section provides general precautions for using the CP-series Programmable Controllers (PLCs) and related devices.

The information contained in this section is important for the safe and reliable application of Programmable Controllers. You must read this section and understand the information contained before attempting to set up or operate a PLC system.

1 Intended Audience xxiv
2 General Precautions xxiv
3 Safety Precautions xxiv
4 Operating Environment Precautions xxvi
5 Application Precautions xxvii
6 Conformance to EC Directives xxx
6-1 Applicable Directives xxx
6-2 Concepts xxx
6-3 Conformance to EC Directives xxx
6-4 Relay Output Noise Reduction Methods xxx
6-5 Conditions for Meeting EMC Directives when Using CP/CPM1A Relay Expansion I/O Units xxxii

1 Intended Audience

This manual is intended for the following personnel, who must also have knowledge of electrical systems (an electrical engineer or the equivalent).

- Personnel in charge of installing FA systems.
- Personnel in charge of designing FA systems.
- Personnel in charge of managing FA systems and facilities.

2 General Precautions

The user must operate the product according to the performance specifications described in the operation manuals.

Before using the product under conditions which are not described in the manual or applying the product to nuclear control systems, railroad systems, aviation systems, vehicles, combustion systems, medical equipment, amusement machines, safety equipment, and other systems, machines, and equipment that may have a serious influence on lives and property if used improperly, consult your OMRON representative.

Make sure that the ratings and performance characteristics of the product are sufficient for the systems, machines, and equipment, and be sure to provide the systems, machines, and equipment with double safety mechanisms.

This manual provides information for programming and operating the Unit. Be sure to read this manual before attempting to use the Unit and keep this manual close at hand for reference during operation.

⚠WARNING It is extremely important that a PLC and all PLC Units be used for the specified purpose and under the specified conditions, especially in applications that can directly or indirectly affect human life. You must consult with your OMRON representative before applying a PLC System to the above-mentioned applications.

3 Safety Precautions

⚠WARNING Do not attempt to take any Unit apart while the power is being supplied. Doing so may result in electric shock.

⚠WARNING Do not touch any of the terminals or terminal blocks while the power is being supplied. Doing so may result in electric shock.

⚠WARNING Do not attempt to disassemble, repair, or modify any Units. Any attempt to do so may result in malfunction, fire, or electric shock.

⚠WARNING Provide safety measures in external circuits (i.e., not in the Programmable Controller), including the following items, to ensure safety in the system if an abnormality occurs due to malfunction of the PLC or another external factor affecting the PLC operation. Not doing so may result in serious accidents.

- Emergency stop circuits, interlock circuits, limit circuits, and similar safety measures must be provided in external control circuits.

- The PLC will turn OFF all outputs when its self-diagnosis function detects any error or when a severe failure alarm (FALS) instruction is executed. Unexpected operation, however, may still occur for errors in the I/O control section, errors in I/O memory, and errors that cannot be detected by the self-diagnosis function. As a countermeasure for all these errors, external safety measures must be provided to ensure safety in the system.
- The PLC or outputs may remain ON or OFF due to deposits on or burning of the output relays, or destruction of the output transistors. As a countermeasure for such problems, external safety measures must be provided to ensure safety in the system.
- When the 24-V DC output (service power supply to the PLC) is overloaded or short-circuited, the voltage may drop and result in the outputs being turned OFF. As a countermeasure for such problems, external safety measures must be provided to ensure safety in the system.

⚠WARNING Fail-safe measures must be taken by the customer to ensure safety in the event of incorrect, missing, or abnormal signals caused by broken signal lines, momentary power interruptions, or other causes. Not doing so may result in serious accidents.

⚠WARNING Do not apply the voltage/current outside the specified range to this unit. It may cause a malfunction or fire.

⚠Caution Execute online edit only after confirming that no adverse effects will be caused by extending the cycle time. Otherwise, the input signals may not be readable.

⚠Caution Confirm safety at the destination node before transferring a program to another node or editing the I/O area. Doing either of these without confirming safety may result in injury.

⚠Caution Tighten the screws on the terminal block of the AC power supply to the torque specified in this manual. The loose screws may result in burning or malfunction.

⚠Caution Do not touch anywhere near the power supply parts or I/O terminals while the power is ON, and immediately after turning OFF the power. The hot surface may cause burn injury.

⚠Caution Pay careful attention to the polarities (+/-) when wiring the DC power supply. A wrong connection may cause malfunction of the system.

⚠Caution When connecting the PLC to a computer or other peripheral device, either ground the 0 V side of the external power supply or do not ground the external power supply at all. Otherwise the external power supply may be shorted depending on the connection methods of the peripheral device. DO NOT ground the 24 V side of the external power supply, as shown in the following diagram.

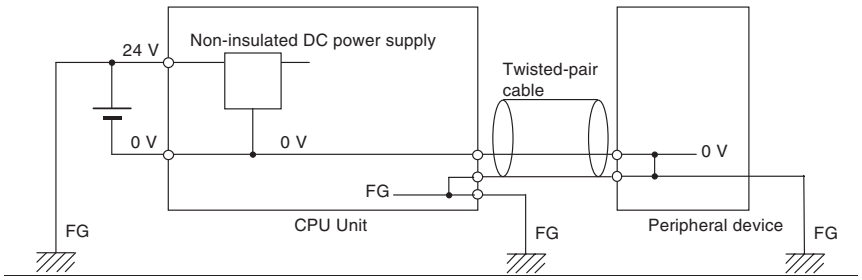

⚠**Caution** After programming (or reprogramming) using the IOWR instruction, confirm that correct operation is possible with the new ladder program and data before starting actual operation. Any irregularities may cause the product to stop operating, resulting in unexpected operation in machinery or equipment.

⚠**Caution** The CP1L CPU Units automatically back up the user program and parameter data to flash memory when these are written to the CPU Unit. I/O memory (including the DM Area, counter present values and Completion Flags, and HR Area), however, is not written to flash memory. The DM Area, counter present values and Completion Flags, and HR Area can be held during power interruptions with a battery. If there is a battery error, the contents of these areas may not be accurate after a power interruption. If the contents of the DM Area, counter present values and Completion Flags, and HR Area are used to control external outputs, prevent inappropriate outputs from being made whenever the Battery Error Flag (A402.04) is ON.

4 Operating Environment Precautions

⚠**Caution** Do not operate the control system in the following locations:

- Locations subject to direct sunlight.
- Locations subject to temperatures or humidity outside the range specified in the specifications.
- Locations subject to condensation as the result of severe changes in temperature.
- Locations subject to corrosive or flammable gases.
- Locations subject to dust (especially iron dust) or salts.
- Locations subject to exposure to water, oil, or chemicals.
- Locations subject to shock or vibration.

⚠**Caution** Take appropriate and sufficient countermeasures when installing systems in the following locations:

- Locations subject to static electricity or other forms of noise.
- Locations subject to strong electromagnetic fields.
- Locations subject to possible exposure to radioactivity.
- Locations close to power supplies.

⚠**Caution** The operating environment of the PLC System can have a large effect on the longevity and reliability of the system. Improper operating environments can lead to malfunction, failure, and other unforeseeable problems with the PLC System. Make sure that the operating environment is within the specified conditions at installation and remains within the specified conditions during the life of the system.

5 Application Precautions

Observe the following precautions when using the PLC System.

⚠WARNING Always heed these precautions. Failure to abide by the following precautions could lead to serious or possibly fatal injury.

- Always connect to 100 Ω or less when installing the Units. Not connecting to a ground of 100 Ω or less may result in electric shock.
- Always turn OFF the power supply to the PLC before attempting any of the following. Not turning OFF the power supply may result in malfunction or electric shock.
  - Mounting or dismounting Expansion Units or any other Units
  - Connecting or removing the Memory Cassette or Option Board
  - Setting DIP switches or rotary switches
  - Connecting or wiring the cables
  - Connecting or disconnecting the connectors

⚠Caution Failure to abide by the following precautions could lead to faulty operation of the PLC or the system, or could damage the PLC or PLC Units. Always heed these precautions.

- Install external breakers and take other safety measures against short-circuiting in external wiring. Insufficient safety measures against short-circuiting may result in burning.
- Mount the Unit only after checking the connectors and terminal blocks completely.
- Be sure that all the terminal screws and cable connector screws are tightened to the torque specified in the relevant manuals. Incorrect tightening torque may result in malfunction.
- Wire all connections correctly according to instructions in this manual.
- Always use the power supply voltage specified in the operation manuals. An incorrect voltage may result in malfunction or burning.
- Take appropriate measures to ensure that the specified power with the rated voltage and frequency is supplied. Be particularly careful in places where the power supply is unstable. An incorrect power supply may result in malfunction.
- Leave the label attached to the Unit when wiring. Removing the label may result in malfunction.
- Remove the label after the completion of wiring to ensure proper heat dissipation. Leaving the label attached may result in malfunction.
- Use crimp terminals for wiring. Do not connect bare stranded wires directly to terminals. Connection of bare stranded wires may result in burning.
- Do not apply voltages to the input terminals in excess of the rated input voltage. Excess voltages may result in burning.
- Do not apply voltages or connect loads to the output terminals in excess of the maximum switching capacity. Excess voltage or loads may result in burning.

- Be sure that the terminal blocks, connectors, Option Boards, and other items with locking devices are properly locked into place. Improper locking may result in malfunction.
- Disconnect the functional ground terminal when performing withstand voltage tests. Not disconnecting the functional ground terminal may result in burning.
- Wire correctly and double-check all the wiring or the setting switches before turning ON the power supply. Incorrect wiring may result in burning.
- Check that the DIP switches and data memory (DM) are properly set before starting operation.
- Check the user program for proper execution before actually running it on the Unit. Not checking the program may result in an unexpected operation.
- Resume operation only after transferring to the new CPU Unit the contents of the DM, HR, and CNT Areas required for resuming operation. Not doing so may result in an unexpected operation.
- Confirm that no adverse effect will occur in the system before attempting any of the following. Not doing so may result in an unexpected operation.
  - Changing the operating mode of the PLC (including the setting of the startup operating mode).
  - Force-setting/force-resetting any bit in memory.
  - Changing the present value of any word or any set value in memory.
- Do not pull on the cables or bend the cables beyond their natural limit. Doing either of these may break the cables.
- Do not place objects on top of the cables. Doing so may break the cables.
- When replacing parts, be sure to confirm that the rating of a new part is correct. Not doing so may result in malfunction or burning.
- Before touching the Unit, be sure to first touch a grounded metallic object in order to discharge any static buildup. Not doing so may result in malfunction or damage.
- Do not touch the Expansion I/O Unit Connecting Cable while the power is being supplied in order to prevent malfunction due to static electricity.
- Do not turn OFF the power supply to the Unit while data is being transferred.
- When transporting or storing the product, cover the PCBs and the Units or put there in the antistatic bag with electrically conductive materials to prevent LSIs and ICs from being damaged by static electricity, and also keep the product within the specified storage temperature range.
- Do not touch the mounted parts or the rear surface of PCBs because PCBs have sharp edges such as electrical leads.
- Double-check the pin numbers when assembling and wiring the connectors.
- Wire correctly according to specified procedures.
- Do not connect pin 6 (+5V) on the RS-232C Option Board (CP1W-CIF01) on the CPU Unit to any external device other than the NT-AL001 or CJ1W-CIF11 Conversion Adapter. The external device and the CPU Unit may be damaged.

- Use the dedicated connecting cables specified in this manual to connect the Units. Using commercially available RS-232C computer cables may cause failures in external devices or the CPU Unit.
- The user program and parameter area data in the CPU Unit is backed up in the built-in flash memory. The BKUP indicator will light on the front of the CPU Unit when the backup operation is in progress. Do not turn OFF the power supply to the CPU Unit when the BKUP indicator is lit. The data will not be backed up if power is turned OFF.
- Do not turn OFF the power supply to the PLC while the Memory Cassette is being written. Doing so may corrupt the data in the Memory Cassette. The BKUP indicator will light while the Memory Cassette is being written. Wait for the BKUP indicator to go out before turning OFF the power supply to the PLC.
- Before replacing the battery, supply power to the CPU Unit for at least 5 minutes and then complete battery replacement within 5 minutes of turn OFF the power supply. Memory data may be corrupted if this precaution is not observed.
- Always use the following size wire when connecting I/O terminals: AWG22 to AWG18 (0.32 to 0.82 mm^2).
- Dispose of the product and batteries according to local ordinances as they apply.
  Have qualified specialists properly dispose of used batteries as industrial waste.

- UL standards required that batteries be replaced only by experienced technicians. Do not allow unqualified persons to replace batteries. Also, always follow the replacement procedure provided in the manual.
- Never short-circuit the positive and negative terminals of a battery or charge, disassemble, heat, or incinerate the battery. Do not subject the battery to strong shocks or deform the barry by applying pressure. Doing any of these may result in leakage, rupture, heat generation, or ignition of the battery. Dispose of any battery that has been dropped on the floor or otherwise subjected to excessive shock. Batteries that have been subjected to shock may leak if they are used.
- Always construct external circuits so that the power to the PLC it turned ON before the power to the control system is turned ON. If the PLC power supply is turned ON after the control power supply, temporary errors may result in control system signals because the output terminals on DC Output Units and other Units will momentarily turn ON when power is turned ON to the PLC.
- Fail-safe measures must be taken by the customer to ensure safety in the event that outputs from Output Units remain ON as a result of internal circuit failures, which can occur in relays, transistors, and other elements.
- If the I/O Hold Bit is turned ON, the outputs from the PLC will not be turned OFF and will maintain their previous status when the PLC is switched from RUN or MONITOR mode to PROGRAM mode. Make sure that the external loads will not produce dangerous conditions when this occurs. (When operation stops for a fatal error, including those produced with the FALS(007) instruction, all outputs from Output Unit will be turned OFF and only the internal output status will be maintained.)

6 Conformance to EC Directives

6-1 Applicable Directives

- EMC Directives
- Low Voltage Directive

6-2 Concepts

EMC Directives

OMRON devices that comply with EC Directives also conform to the related EMC standards so that they can be more easily built into other devices or the overall machine. The actual products have been checked for conformity to EMC standards (see the following note). Whether the products conform to the standards in the system used by the customer, however, must be checked by the customer.

EMC-related performance of the OMRON devices that comply with EC Directives will vary depending on the configuration, wiring, and other conditions of the equipment or control panel on which the OMRON devices are installed. The customer must, therefore, perform the final check to confirm that devices and the overall machine conform to EMC standards.

Note The applicable EMC (Electromagnetic Compatibility) standard is EN61131-2.

Low Voltage Directive

Always ensure that devices operating at voltages of 50 to 1,000 V AC and 75 to 1,500 V DC meet the required safety standards for the PLC (EN61131-2).

6-3 Conformance to EC Directives

The CP1L PLCs comply with EC Directives. To ensure that the machine or device in which the CP1L PLC is used complies with EC Directives, the PLC must be installed as follows:

1,2,3...

1. The CP1L PLC must be installed within a control panel.
2. You must use reinforced insulation or double insulation for the DC power supplies used for I/O Units and CPU Units requiring DC power. The output holding time must be 10 ms minimum for the DC power supply connected to the power supply terminals on Units requiring DC power.
3. CP1L PLCs complying with EC Directives also conform to EN61131-2. Radiated emission characteristics (10-m regulations) may vary depending on the configuration of the control panel used, other devices connected to the control panel, wiring, and other conditions. You must therefore confirm that the overall machine or equipment complies with EC Directives.

6-4 Relay Output Noise Reduction Methods

The CP1L PLCs conforms to the Common Emission Standards (EN61131-2) of the EMC Directives. However, noise generated by relay output switching may not satisfy these Standards. In such a case, a noise filter must be connected to the load side or other appropriate countermeasures must be provided external to the PLC.

Countermeasures taken to satisfy the standards vary depending on the devices on the load side, wiring, configuration of machines, etc. Following are examples of countermeasures for reducing the generated noise.

Countermeasures

Countermeasures are not required if the frequency of load switching for the whole system with the PLC included is less than 5 times per minute.

Countermeasures are required if the frequency of load switching for the whole system with the PLC included is more than 5 times per minute.

Note Refer to EN61131-2 for more details.

Countermeasure Examples

When switching an inductive load, connect an surge protector, diodes, etc., in parallel with the load or contact as shown below.

Circuit	Current		Characteristic	Required element
	AC	DC		
CR method 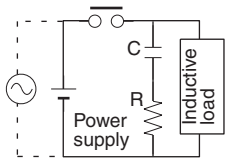	Yes	Yes	If the load is a relay or solenoid, there is a time lag between the moment the circuit is opened and the moment the load is reset. If the supply voltage is 24 or 48 V, insert the surge protector in parallel with the load. If the supply voltage is 100 to 200 V, insert the surge protector between the contacts.	The capacitance of the capacitor must be 1 to 0.5 μF per contact current of 1 A and resistance of the resistor must be 0.5 to 1 Ω per contact voltage of 1 V. These values, however, vary with the load and the characteristics of the relay. Decide these values from experiments, and take into consideration that the capacitance suppresses spark discharge when the contacts are separated and the resistance limits the current that flows into the load when the circuit is closed again. The dielectric strength of the capacitor must be 200 to 300 V. If the circuit is an AC circuit, use a capacitor with no polarity.
Diode method 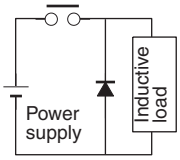	No	Yes	The diode connected in parallel with the load changes energy accumulated by the coil into a current, which then flows into the coil so that the current will be converted into Joule heat by the resistance of the inductive load. This time lag, between the moment the circuit is opened and the moment the load is reset, caused by this method is longer than that caused by the CR method.	The reversed dielectric strength value of the diode must be at least 10 times as large as the circuit voltage value. The forward current of the diode must be the same as or larger than the load current. The reversed dielectric strength value of the diode may be two to three times larger than the supply voltage if the surge protector is applied to electronic circuits with low circuit voltages.
Varistor method 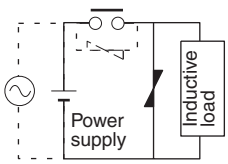	Yes	Yes	The varistor method prevents the imposition of high voltage between the contacts by using the constant voltage characteristic of the varistor. There is time lag between the moment the circuit is opened and the moment the load is reset. If the supply voltage is 24 or 48 V, insert the varistor in parallel with the load. If the supply voltage is 100 to 200 V, insert the varistor between the contacts.	---

When switching a load with a high inrush current such as an incandescent lamp, suppress the inrush current as shown below.

Countermeasure 1

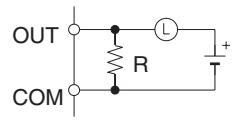

Providing a dark current of approx. one-third of the rated value through an incandescent lamp

Countermeasure 2

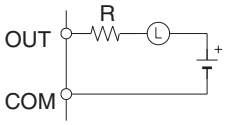

Providing a limiting resistor

6-5 Conditions for Meeting EMC Directives when Using CP/CPM1A Relay Expansion I/O Units

EN61131-2 immunity testing conditions when using the CP1W-40EDR, CPM1A-40EDR, CP1W-32ER, CP1W-16ER, or CPM1A-16ER with a CP1W-CN811 I/O Connecting Cable are given below.

Recommended Ferrite Core

Ferrite Core (Data Line Filter): 0443-164151 manufactured by Nisshin Electric

Minimum impedance: 90 Ω at 25 MHz, 160 Ω at 100 MHz

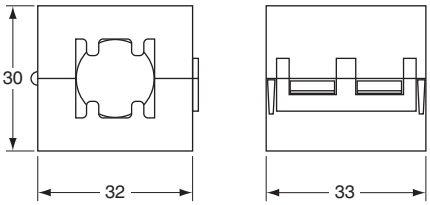

Recommended Connection Method

1,2,3... 1. Cable Connection Method

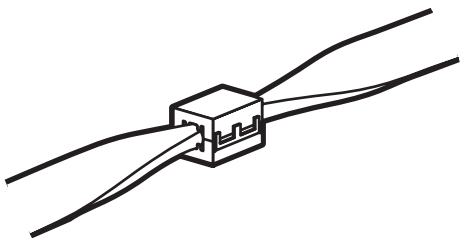

2. Connection Method
   As shown below, connect a ferrite core to each end of the CP1W-CN811 I/O Connecting Cable.

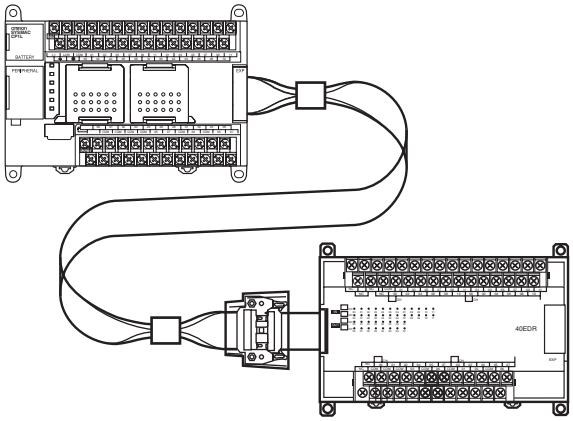

SECTION 1
Features and System Configuration

This section introduces the features of the CP1L and describes its configuration. It also describes the Units that are available and connection methods for the CX-Programmer and other peripheral devices.

1-1 Features and Main Functions 2
1-1-1 CP1L Overview 2
1-1-2 Features 7
1-2 System Configuration 15
1-2-1 Basic System 15
1-2-2 System Expansion 18
1-2-3 Restrictions on System Configuration 21
1-3 Connecting the CX-Programmer 23
1-3-1 Connecting with a Commercially Available USB Cable 24
1-3-2 Connecting to a Serial Port 31
1-4 Function Charts 33
1-5 Function Blocks 34
1-5-1 Overview of Function Blocks 34
1-5-2 Advantages of Function Blocks 34

1-1 Features and Main Functions

1-1-1 CP1L Overview

The SYSMAC CP1L PLCs are the low end PLCs in the SYSMAC CP Series of package-type Programmable Controllers. They have the smallest program and I/O capacity. The CP1L PLCs are the same size as the CPM1A and CPM2A PLCs, but offer many more features and high performance.

CPU Units with 60 I/O Points: CP1L-M60D□-□

- The CPU Unit has 36 inputs and 24 outputs built in.
- The PLC can be expanded to a maximum total of 180 I/O points by using CP-series Expansion I/O Units.

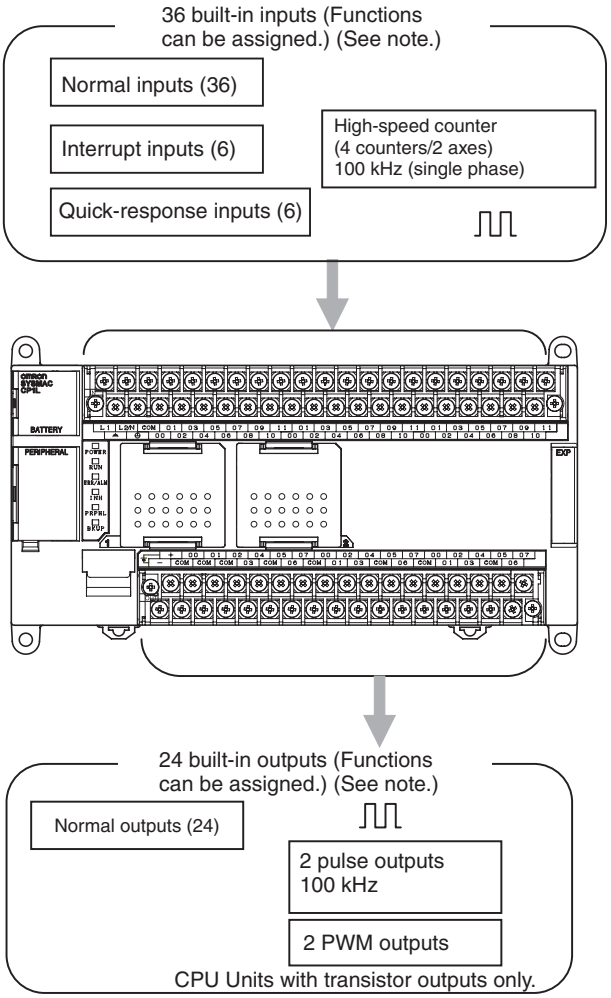

CPU Units with 40 I/O Points: CP1L-M40D□-□

- The CPU Unit has 24 inputs and 16 outputs built in.
- The PLC can be expanded to a maximum total of 160 I/O points by using CP-series Expansion I/O Units.

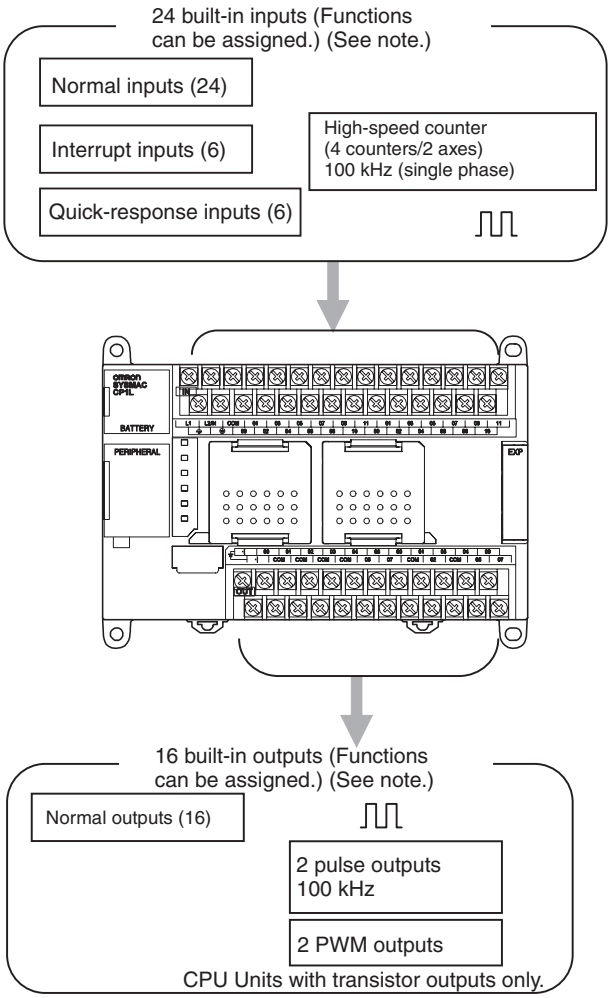

CPU Units with 30 I/O Points: CP1L-M30D□-□

- The CPU Unit has 18 inputs and 12 outputs built in.
- The PLC can be expanded to a maximum total of 150 I/O points by using CP-series Expansion I/O Units.

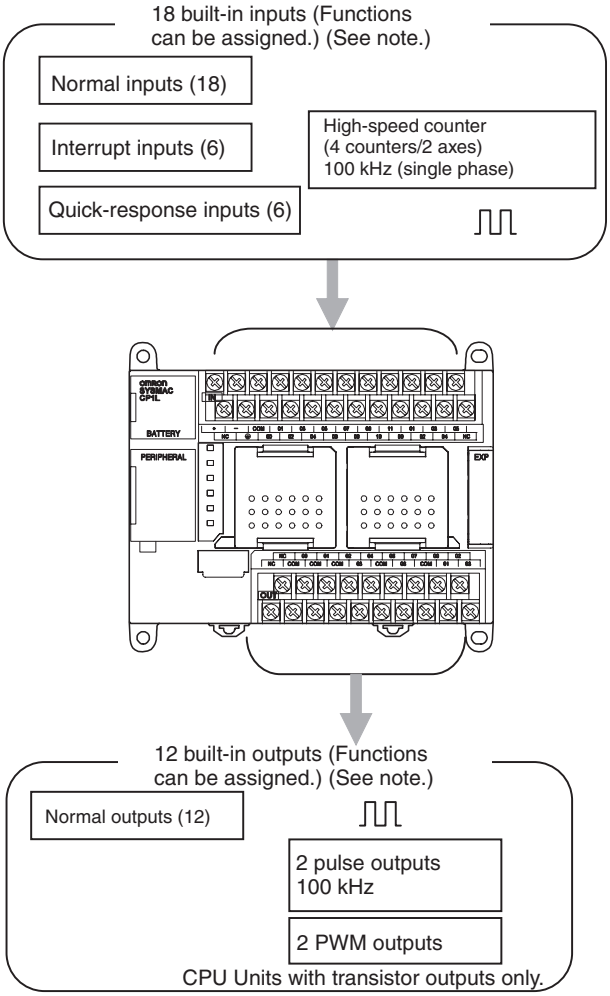

- Four high-speed counters for two axes and two pulse outputs for two axes can be used with the CPU Unit alone.
- Using CP-series Expansion Units also allows extra functions (such as temperature sensor inputs) to be added.
- Installing an Option Board enables RS-232C and RS-422A/485 communications for Programmable Terminals, Bar Code Readers, Inverters, etc.

Note Settings in the PLC Setup determine whether each input point is to be used as a normal input, interrupt input, quick-response input, or high-speed counter. The instruction used to control each output point determines whether it is used as a normal output, pulse output, or PWM output.

CPU Units with 20 I/O Points: CP1L-L20D□-□

- The CPU Unit has 12 inputs and 8 outputs built in.
- The PLC can be expanded to a maximum total of 60 I/O points by using CP-series Expansion I/O Units.

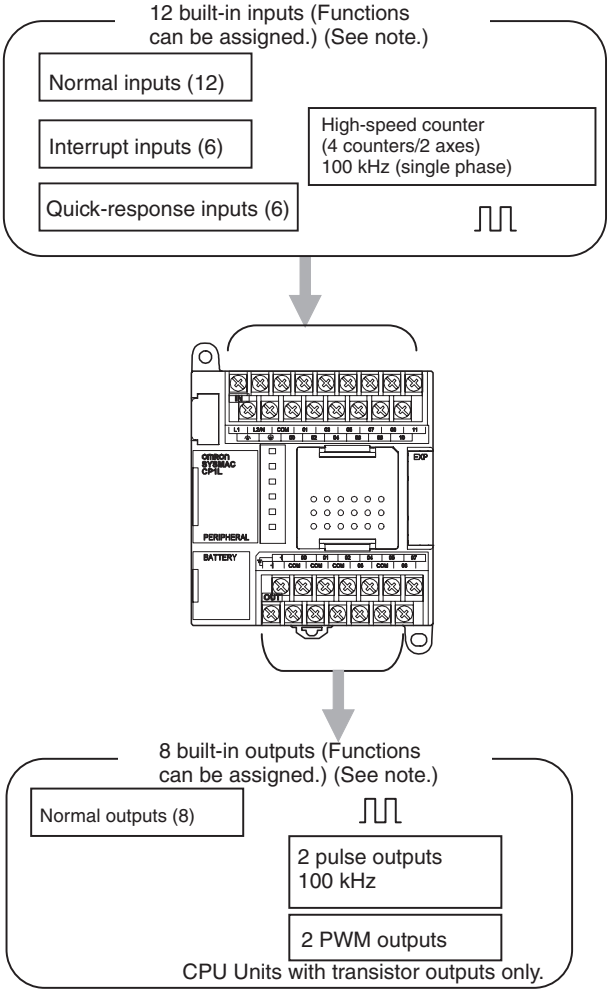

CPU Units with 14 I/O Points: CP1L-L14D□-□

- The CPU Unit has 8 inputs and 6 outputs built in.
- The PLC can be expanded to a maximum total of 54 I/O points by using CP-series Expansion I/O Units.

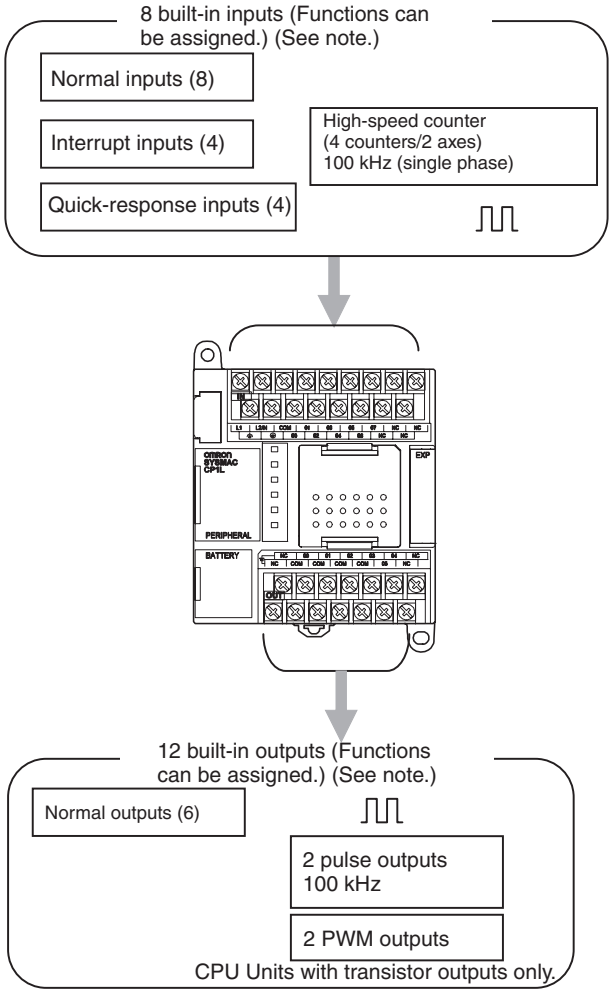

CPU Units with 10 I/O Points: CP1L-L10D□-□

- The CPU Unit has 6 inputs and 4 outputs built in.
- The PLC cannot use CP-series Expansion I/O Units to expand the maximum total of I/O points.

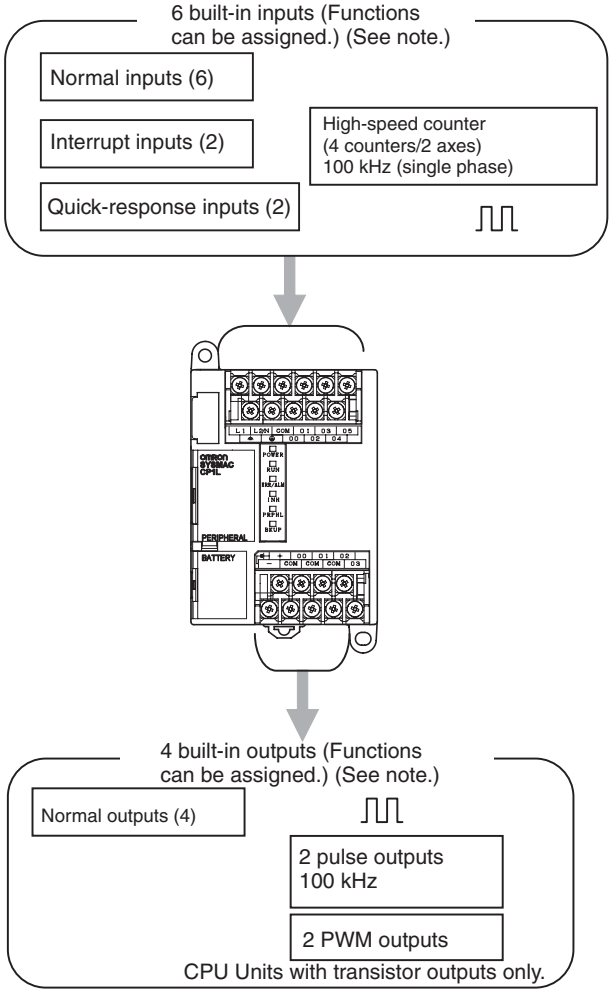

- Four high-speed counters for two axes and two pulse outputs for two axes can be used with the CPU Unit alone.
- Using CP-series Expansion Units also allows extra functions (such as temperature sensor inputs) to be added.
- Installing an Option Board enables RS-232C and RS-422A/485 communications for Programmable Terminals, Bar Code Readers, Inverters, etc.

Note Settings in the PLC Setup determine whether each input point is to be used as a normal input, interrupt input, quick-response input, or high-speed counter. The instruction used to control each output point determines whether it is used as a normal output, pulse output, or PWM output.

CP1L CPU Units

Type		M CPU Units			L CPU Units		
Model		CP1L-M60DR-A CP1L-M60DR-D CP1L-M60DT-A CP1L-M60DT-D CP1L-M60DT1-D	CP1L-M40DR-A CP1L-M40DR-D CP1L-M40DT-A CP1L-M40DT-D CP1L-M40DT1-D	CP1L-M30DR-A CP1L-M30DR-D CP1L-M30DT-A CP1L-M30DT-D CP1L-M30DT1-D	CP1L-L20DR-A CP1L-L20DR-D CP1L-L20DT-A CP1L-L20DT-D CP1L-L20DT1-D	CP1L-L14DR-A CP1L-L14DR-D CP1L-L14DT-A CP1L-L14DT-D CP1L-L14DT1-D	CP1L-L10DR-A CP1L-L10DR-D CP1L-L10DT-A CP1L-L10DT-D CP1L-L10DT1-D
Power supply		Models with AC power (model numbers ending in “-A”): 100 to 240 V AC, 50/60 Hz Models with DC power (model numbers ending in “-D”): 24 V DC					
Program capacity		10K steps			5K steps		
Maximum number of I/O points		180 (See note 1.)	160 (See note 1.)	150 (See note 1.)	60 (See note 2.)	54 (See note 2.)	10 (See note 3.)
Normal I/O	I/O points	60	40	30	20	14	10
	Input points	36	24	18	12	8	6
	Input specifications	24 VDC					
	Interrupt or quick-response inputs	6 max				4 max	2 max
	Output points	24	16	12	8	6	4
	Output specifications	Relay outputs: Model numbers with “R” before the final suffix Transistor outputs, sinking: Model numbers with “T” before the final suffix Transistor outputs, sourcing:Model numbers with “T1” before the final suffix					
High-speed counter inputs		4 counters/2 axes, 100 kHz (single-phase), 100 kHz for up/down pulses or pulse plus direction, 50 kHz for differential phases					
Pulse outputs		2 axes, 100 kHz (transistor outputs)					

Note (1) Three Expansion I/O Units connected to a CP-series CPU Unit with 60, 40 or 30 I/O Points.

(2) One Expansion I/O Unit connected to a CP-series CPU Unit with 20 or 14 I/O Points.

Interpreting CP1L CPU Unit Model Numbers

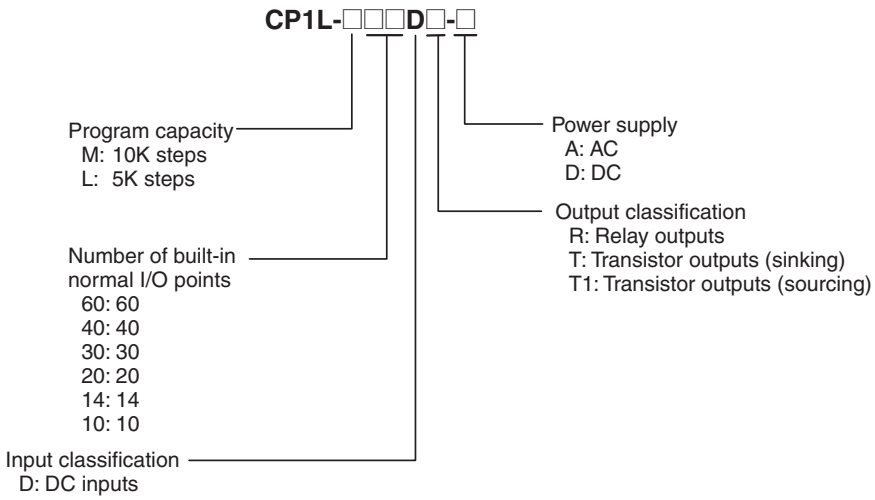

1-1-2 Features

This section describes the main features of the CP1L.

Basic CP1L Configuration

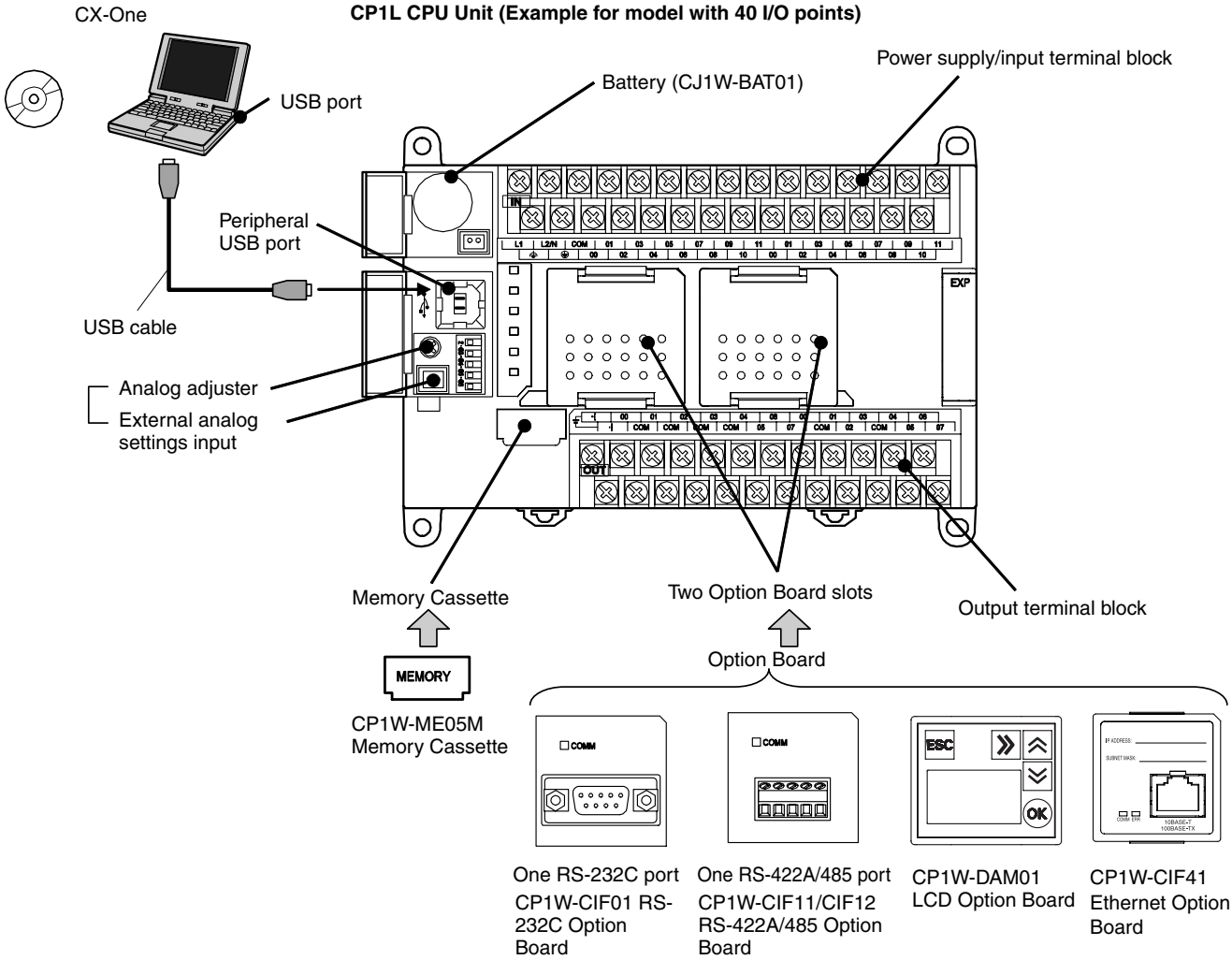

Positioning with an Inverter

Positioning can be controlled using an inverter. Previously, an internal pulse output with trapezoidal acceleration/deceleration is created using the PULSE OUTPUT instruction. The position offset is calculated using an error counter for the feedback pulse input from a rotary encoder connected to an inductive motor and the internal pulse output. The error counter is then used to output a speed command to the inverter to control positioning. This enables positioning with high-capacity motors, as well as low-cost positioning with small-capacity motors (in comparison to using a servo).

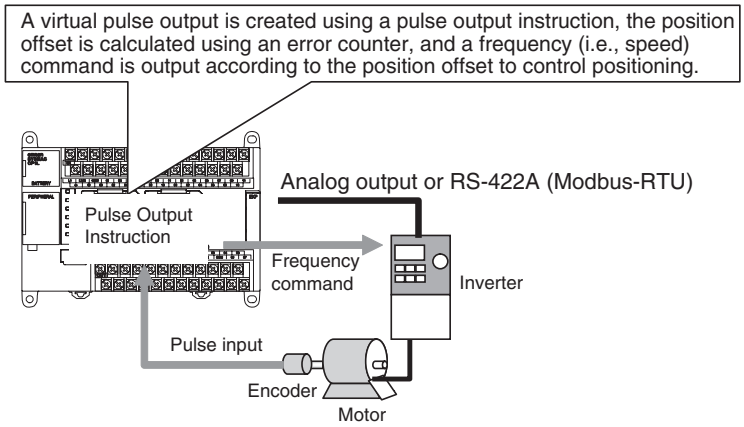

Note If high-precision positioning is required, we recommend using an inverter with vector control.

Full Complement of High-speed Counter Functions

High-speed counter inputs can be enabled by connecting rotary encoders to the built-in inputs. The ample number of high-speed counter inputs makes it possible to control a multi-axis device with a single PLC.

- Four 100-kHz (single phase)/50-kHz (differential phases) high-speed counter inputs (4 counters/2 axes) are provided as a standard feature. (See note.)

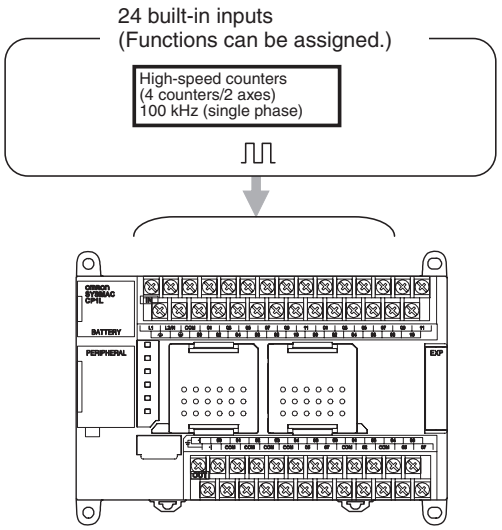

Note Settings in the PLC Setup determine whether each input point is to be used as a normal input, interrupt input, quick-response input, or high-speed counter.

Full Complement of High-speed Counter Functions

High-speed Processing for High-speed Counter Present Value (PV) Target Values or Range Comparison Interrupts

An interrupt task can be started when the count reaches a specified value or falls within a specified range.

High-speed Counter Input Frequency (Speed) Monitoring

The input pulse frequency can be monitored using the PRV instruction (one point (counter 0) only, and you must select whether to use input frequency monitoring or counter 3; you cannot use both).

High-speed Counter PV Holding/Refreshing

It is possible to toggle between holding and refreshing the high-speed counter PV by turning ON and OFF the High-speed Counter Gate Flag from the ladder program.

Versatile Pulse Control (CPU Units with Transistor Outputs Only)

Positioning and speed control by a pulse-input servo driver is enabled by outputting fixed duty ratio pulse output signals from the CPU Unit's built-in outputs.

- Pulse outputs for 2 axes at 100 kHz maximum are provided as standard features. (See note.)

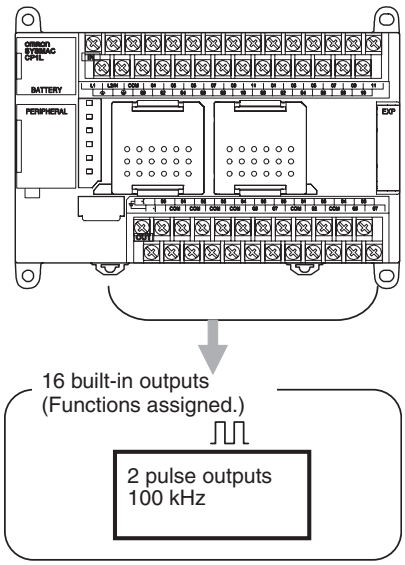

Note The instruction used to control each output point determines whether it is used as a normal output, pulse output, or PWM output.

Full Complement of Pulse Output Functions

Select CW/CCW Pulse Outputs or Pulse Plus Direction Outputs for the Pulse Outputs

The pulse outputs can be selected to match the pulse input specifications of the motor driver.

Easy Positioning with Absolute Coordinate System Using Automatic Direction Setting

For operations in an absolute coordinate system (i.e., when the origin is established or when the PV is changed by the INI instruction), the CW/CCW direction can be automatically set when PULSE OUTPUT instructions are executed according to whether the specified number of output pulses is more or less than the pulse output PV.

Triangular Control

If the amount of output pulses required for acceleration and deceleration (the target frequency times the time to reach the target frequency) exceeds the preset target number of output pulses during positioning (when the ACC instruction in independent mode or the PLS2 instruction is executed), the acceleration and deceleration will be shortened and triangular control will be executed instead of trapezoidal control. In other words, the trapezoidal pulse output will be eliminated, with no period of constant speed.

Target Position Changes during Positioning (Multiple Start)

While positioning using a PULSE OUTPUT (PLS2) instruction is in progress, the target position, target speed, acceleration rate, and deceleration rate can be changed by executing another PLS2 instruction.

Positioning Changes during Speed Control (Interrupt Feeding)

While speed control in continuous mode is in effect, it is possible to change to positioning in independent mode by executing a PULSE OUTPUT (PLS2) instruction. By this means, interrupt feeding (moving a specified amount) can be executed under specified conditions.

Target Speed, Acceleration Rate, and Deceleration Rate Changes during Acceleration or Deceleration

When a PULSE OUTPUT instruction with trapezoidal acceleration and deceleration is executed (for speed control or positioning), the target speed and acceleration and deceleration rates can be changed during acceleration or deceleration.

Lighting and Power Control by Outputting Variable Duty Ratio Pulses

Operations, such as lighting and power control, can be handled by outputting variable duty ratio pulse (PWM) output signals from the CPU Unit's built-in outputs.

Origin Searches

Origin Search and Origin Return Operations Using a Single Instruction

An accurate origin search combining all I/O signals (origin proximity input signal, origin input signal, positioning completed signal, error counter reset output, etc.) can be executed with a single instruction. It is also possible to move directly to an established origin using an origin return operation.

Input Interrupts

In direct mode, an interrupt task can be started when a built-in input turns ON or OFF. In counter mode, the rising or falling edges of built-in inputs can be counted, and an interrupt task started when the count reaches a specified value. The maximum number of interrupt input points is 6 for CPU Units with 20, 30, 40 or 60 I/O points and 4 for CPU Units with 14 I/O points and 2 for CPU Units with 10 I/O points.

Note For each input point, a selection in the PLC Setup determines whether it is to be used as a normal input, interrupt input, quick-response input, or high-speed counter. The interrupt input response frequency in counter mode must be 5 kHz or less total for all interrupts.

Quick-response Inputs

By using quick-response inputs, built-in inputs up to a minimum input signal width of 50 μs can be read regardless of the cycle time. The maximum number of quick-response input points is 6 for CPU Units with 20, 30, 40 or 60 I/O points and 4 for CPU Units with 14 I/O points and 2 for CPU Units with 10 I/O points.

Note For each input, a PLC Setup parameter determines whether it is to be used as a normal input, interrupt input, quick-response input, or high-speed counter.

Analog Settings

Changing Settings Using Analog Adjustment

By adjusting the analog adjuster with a Phillips screwdriver, the value in the Auxiliary Area can be changed to any value between 0 and 255. This makes it easy to change set values such as timers and counters without Programming Devices.

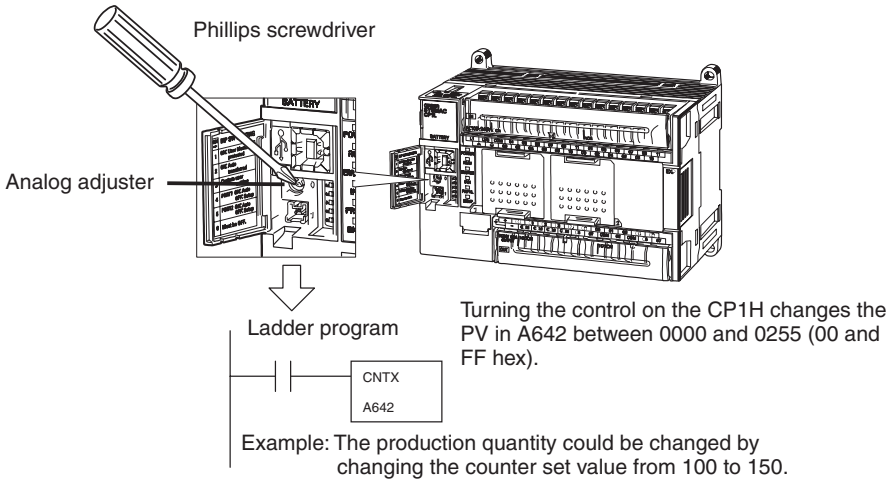

Changing Settings Using External Analog Setting Inputs

External analog values of 0 to 10 V (resolution: 256) are converted to digital values and stored in a word in the AR Area. This enables applications that require on-site adjustment of settings that do not demand a particularly high degree of accuracy, such as for example, a setting based on changes in outdoor temperatures or potentiometer inputs.

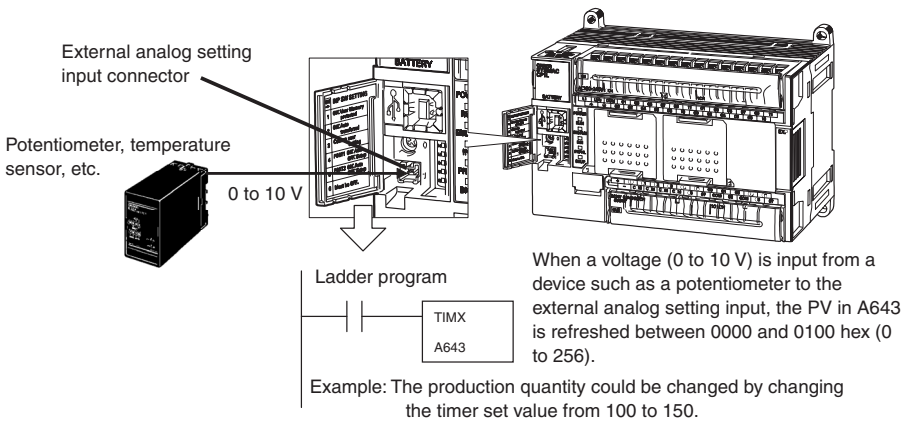

Connectability with Various Components

USB Port for Programming Devices

CX-One Support Software, such as the CX-Programmer, connects from the USB port on a computer to the CP1L built-in peripheral USB port via commercially available USB cable.

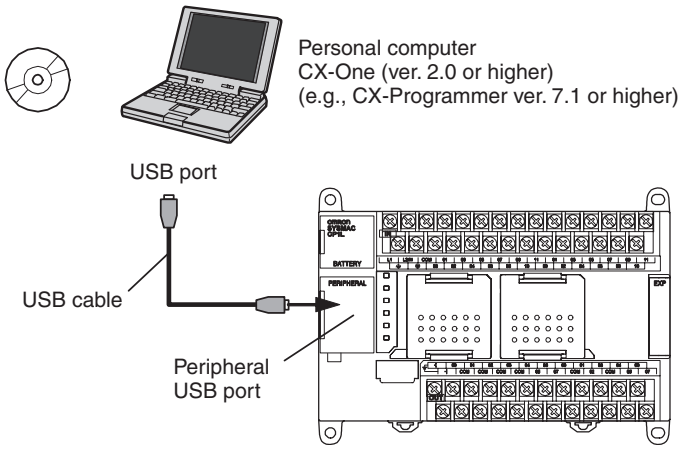

Expansion Capability for Serial Ports

Up to two Serial Communications Boards each with one RS-232C port or one RS-422A/485 port can be added to a CPU Unit with 30, 40 or 60 I/O points. One Serial Communications Boards can be added to a CPU Unit with 20 or 14 I/O points. With a total of up to three ports, including the USB port, this makes it possible to simultaneously connect a computer, PT, CP1L, and/or various components, such as an Inverter, Temperature Controller, or Smart Sensor.

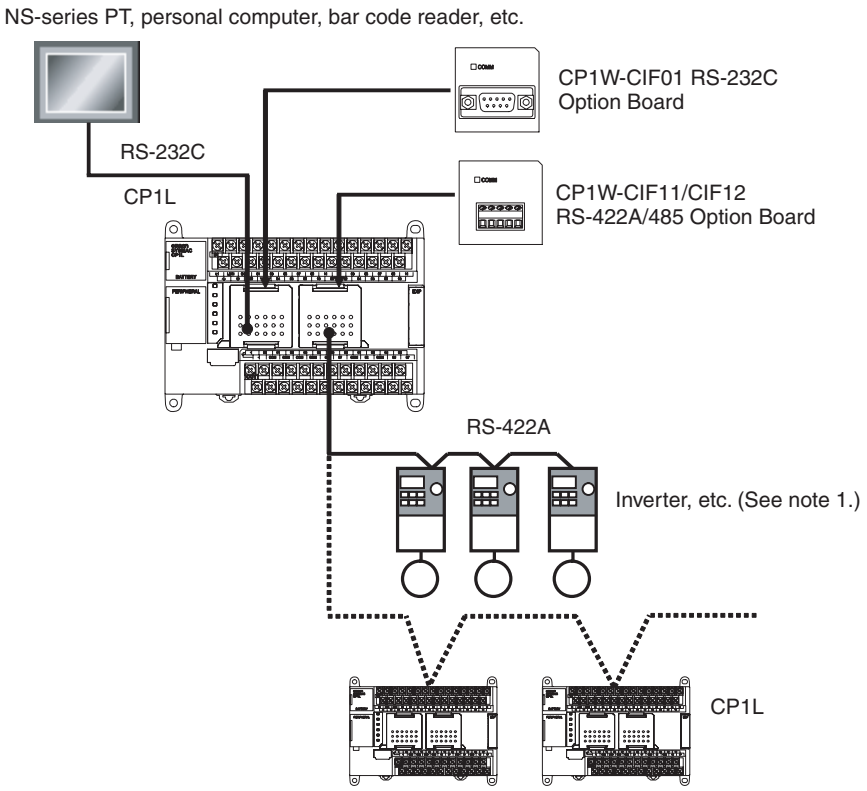

Note (1) The Modbus-RTU easy master (available for all models) makes it easy to control Modbus Slaves (such as Inverters) with serial communications. After the Modbus Slave address, function, and data have been preset in

a fixed memory area (DM), messages can be sent or received independently of the program by turning software switches.

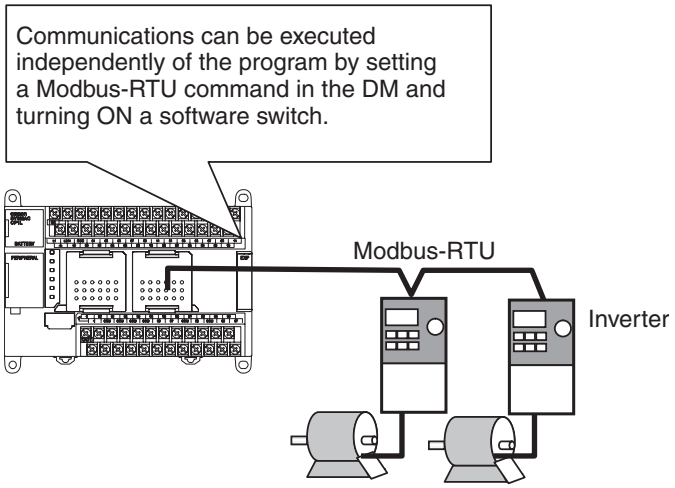

(2) By using the serial PLC Links, a maximum of 10 words of data per CPU Unit can be shared independently of the program among a maximum of nine CPU Units (CP1L-CP1L-CP1H/CJ1M) using RS-422A/485 Option Boards.

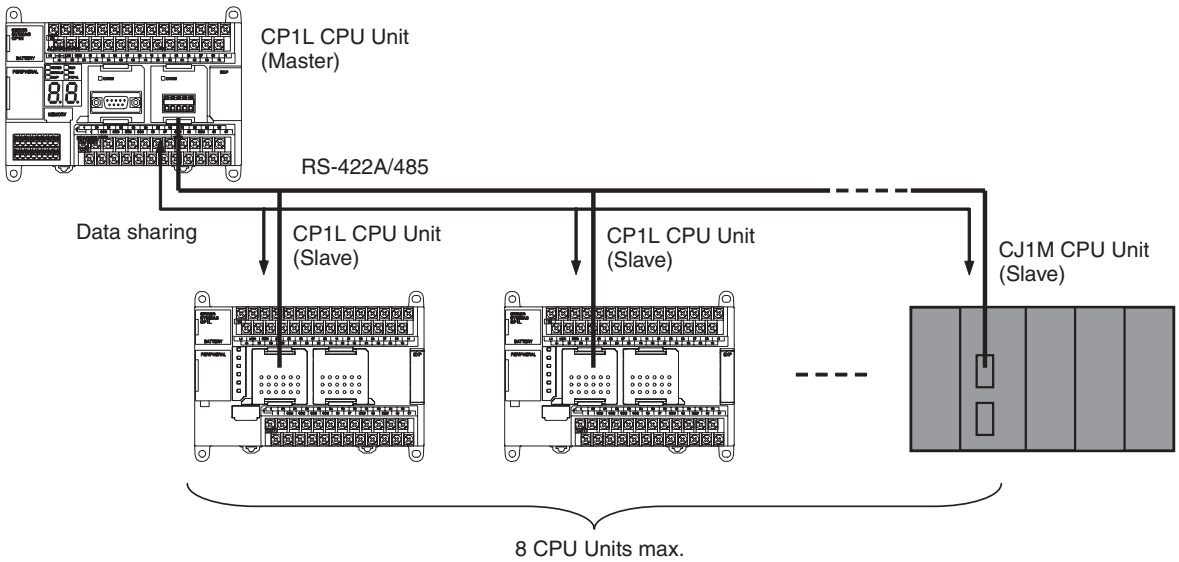

No-battery Operation

Programs, the PLC Setup, and other data can be automatically saved to the CPU Unit's built-in flash memory. Moreover, DM Area data can be saved to the flash memory and then used as initial data when the power is turned ON.

This allows programs and initial values (such as recipe setup data) in the DM Area to be saved in the CPU Unit without the need to maintain a backup battery.

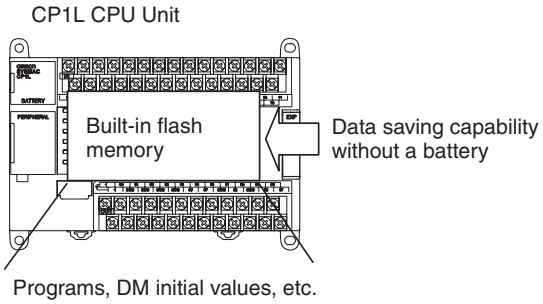

Memory Cassettes

Built-in flash memory data, such as programs and DM initial-value data, can be stored on a Memory Cassette (optional) as backup data. In addition, programs and initial-value data can be easily copied to another CPU Unit using the Memory Cassette to recreate the same system.

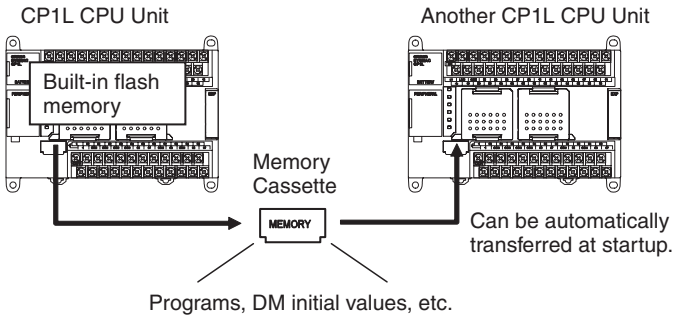

Security

A password registration function is provided for the CPU Unit to prevent unauthorized copy of ladder programs. If an attempt is made to read a ladder program from a CX-Programmer, access to the program is denied if the password that is entered does not match the registered password. If incorrect passwords are entered for five consecutive attempts, the CPU Unit does not accept any more passwords for two hours.

1-2 System Configuration

1-2-1 Basic System

CPU Unit with 60 I/O Points

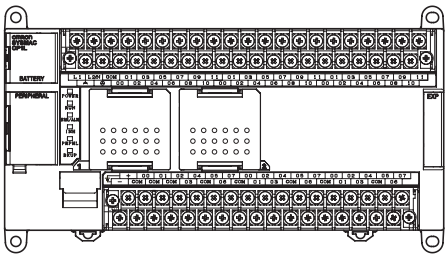

CPU Unit with 40 I/O Points

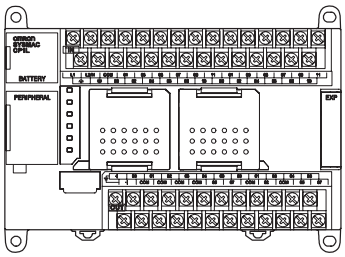

CPU Unit with 30 I/O Points

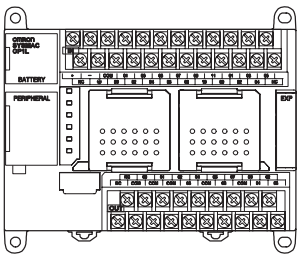

CPU Unit with 20 I/O Points

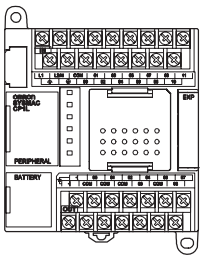

CPU Unit with 14 I/O Points

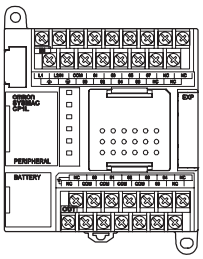

CPU Unit with 10 I/O Points

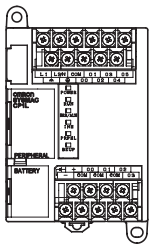

Maximum Number of Normal I/O Points

Type	I/O capacity	Power supply voltage	Model	Normal built-in inputs	Normal built-in outputs	Weight
M	60 points	100 to 240 VAC	CP1L-M60DR-A	36 DC inputs	24 relay outputs	820 g max.
		24 VDC	CP1L-M60DR-D			730 g max.
		100 to 240 VAC	CP1L-M60DT-A		24 transistor (sinking) outputs	765 g max.
		24 VDC	CP1L-M60DT-D			680 g max.
			CP1L-M60DT1-D		24 transistor (sourcing) outputs	675 g max.
	40 points	100 to 240 VAC	CP1L-M40DR-A	24 DC inputs	16 relay outputs	675 g max.
		24 VDC	CP1L-M40DR-D			590 g max.
		100 to 240 VAC	CP1L-M40DT-A		16 transistor (sinking) outputs	645 g max.
		24 VDC	CP1L-M60DT-D			550 g max.
			CP1L-M40DT1-D		16 transistor (sourcing) outputs	550 g max.
	30 points	100 to 240 VAC	CP1L-M30DR-A	18 DC inputs	12 relay outputs	610 g max.
		24 VDC	CP1L-M30DR-D			525 g max.
		100 to 240 VAC	CP1L-M30DT-A		12 transistor (sinking) outputs	590 g max.
		24 VDC	CP1L-M30DT-D			495 g max.
			CP1L-M30DT1-D		12 transistor (sourcing) outputs	495 g max.

Type	I/O capacity	Power supply voltage	Model	Normal built-in inputs	Normal built-in outputs	Weight
L	20 points	100 to 240 VAC	CP1L-L20DR-A	12 DC inputs	8 relay outputs	380 g max.
		24 VDC	CP1L-L20DR-D			350 g max.
		100 to 240 VAC	CP1L-L20DT-A		8 transistor (sinking) outputs	360 g max.
		24 VDC	CP1L-L20DT-D			335 g max.
			CP1L-L20DT1-D		8 transistor (sourcing) outputs	335 g max.
	14 points	100 to 240 VAC	CP1L-L14DR-A	8 DC inputs	6 relay outputs	380 g max.
		24 VDC	CP1L-L14DR-D			350 g max.
		100 to 240 VAC	CP1L-L14DT-A		6 transistor (sinking) outputs	360 g max.
		24 VDC	CP1L-L14DT-D			335 g max.
			CP1L-L14DT1-D		6 transistor (sourcing) outputs	335 g max.
	10 points	100 to 240 VAC	CP1L-L10DR-A	6 DC inputs	4 relay outputs	300 g max.
		24 VDC	CP1L-L10DR-D			275 g max.
		100 to 240 VAC	CP1L-L10DT-A		4 transistor (sinking) outputs	290 g max.
		24 VDC	CP1L-L10DT-D			270 g max.
			CP1L-L10DT1-D		4 transistor (sourcing) outputs	270 g max.

Optional Products

Item	Model	Specifications	Weight
Memory Cassette	CP1W-ME05M	Can be used to store user programs in flash memory, parameters, DM initial values, comment memory, FB programs, and data in RAM.	10 g max.
LCD Option Board	CP1W-DAM01	Can be used to monitor and change user-specified messages, time or other data of the PLC.	20 g max.
Ethernet Option Board	CP1W-CIF41	Can be used to communicate with these units supported OMRON FINS/TCP, FINS/UDP protocol.	20 g max.

Serial Communications Expansion

When serial communications are required for a CP1L CPU Unit, an RS-232C or RS-422A/485 Option Board can be added.

Two Option Boards can be mounted with a CPU Units with 30, 40 or 60 I/O points and one Option Board can be mounted with a CPU Units with 20 or 14 I/O points.

This enables connection by serial communications to NS-series PTs, Bar Code Readers, components such as Inverters, and computers without USB ports (such as when using the CX-Programmer).

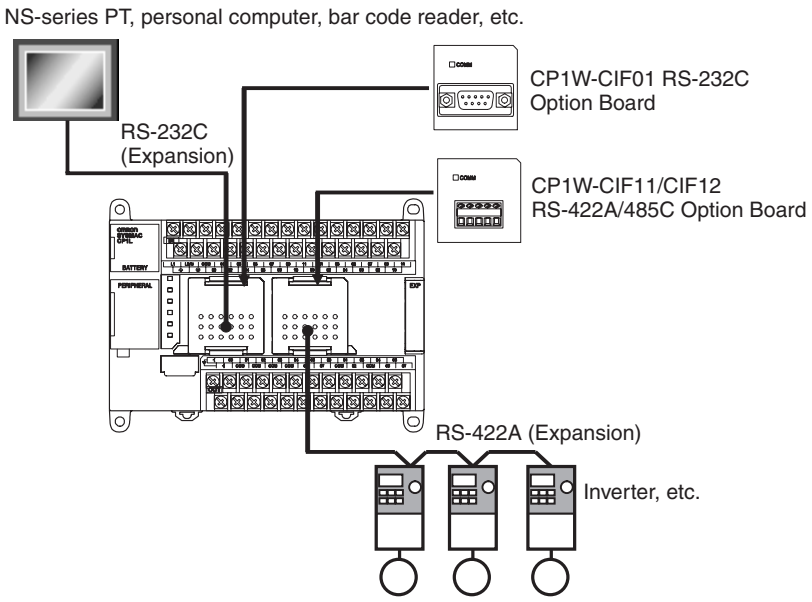

Option Boards for Serial Communications

Appearance	Name	Model	Port	Serial communications modes
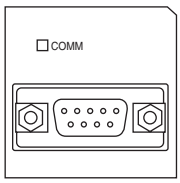	RS-232C Option Board	CP1W-CIF01	One RS-232C port (D-Sub, 9 pins, female)	Host Link, NT Link (1: N or 1:1 Link Master, 1:1 Link Slave), No-protocol, Serial PLC Link Slave, Serial PLC Link Master, Serial Gateway (conversion to CompoWay/F, conversion to Modbus-RTU), peripheral bus
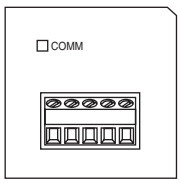	RS-422A/485 Option Board	CP1W-CIF11/CIF12	One RS-422A/485 port (terminal block for ferrules)	

1-2-2 System Expansion

CP-series Expansion Units or Expansion I/O Units can be connected to a CP1L CPU Unit. Up to three Expansion Units or Expansion I/O Units can be connected to a CPU Unit with 30, 40 or 60 I/O points and one Expansion Unit or Expansion I/O Unit can be connected to a CPU Unit with 20 or 14 I/O points. This allows for the expansion of various functions such as I/O points or temperature sensor inputs.

CP1L CPU Unit with 30, 40 or 60 I/O Points

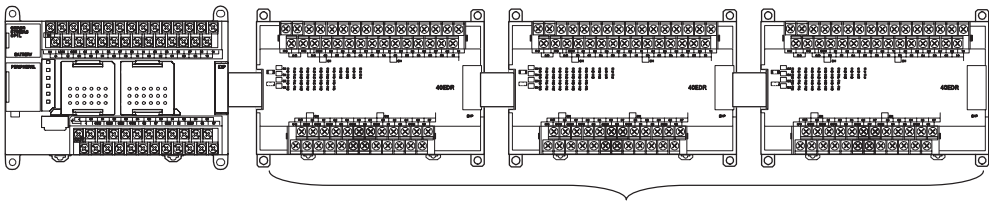

A maximum of three CP-series Expansion I/O Units or Expansion Units can be added.

CP1L CPU Unit with 20 or 14 I/O Points

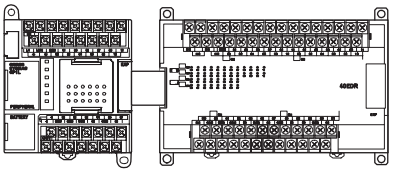

One CP-series Expansion I/O Unit or Expansion Unit can be added.

CP1L CPU Unit with 10 I/O Points

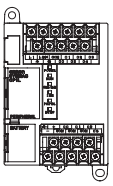

No CP-series Expansion I/O Unit or Expansion Unit can be added.

Using I/O Connecting Cable

When using CP-series Expansion Units and Expansion I/O Units, it is possible to use CP1W-CN811 Connecting Cable to arrange the Units in upper and lower rows.

- I/O Connecting Cable can be used in one place only, and not in multiple places.

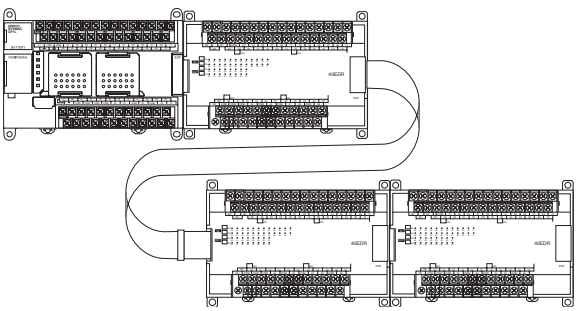

Maximum I/O Points

Up to three Expansion Units or Expansion I/O Units can be connected to a CPU Unit with 30, 40 or 60 I/O points and one Expansion Unit or Expansion I/O Unit can be connected to a CPU Unit with 20 or 14 I/O points. The maximum I/O capacity is thus achieved by connecting either one or three Expansion Units or Expansion I/O Units.

Type	I/O capacity	Model	Built-in inputs	Built-in outputs	Maximum number of Expansion I/O Units or Expansion Units	Maximum total I/O points
M	60 points	CP1L-M60DR-A CP1L-M60DR-D CP1L-M60DT-A CP1L-M60DT-D CP1L-M60DT1-D	36	24	3 Units max. Inputs: 24 × 3 Outputs: 16 × 3	Max.: 180 points Inputs: 108 points Outputs: 72 points
	40 points	CP1L-M40DR-A CP1L-M40DR-D CP1L-M40DT-A CP1L-M40DT-D CP1L-M40DT1-D	24	16	3 Units max. Inputs: 24 × 3 Outputs: 16 × 3	Max.: 160 points Inputs: 96 points Outputs: 64 points
	30 points	CP1L-M30DR-A CP1L-M30DR-D CP1L-M30DT-A CP1L-M30DT-D CP1L-M30DT1-D	18	12	3 Units max. Inputs: 24 × 3 Outputs: 16 × 3	Max.: 150 points Inputs: 90 points Outputs: 60 points
L	20 points	CP1L-L20DR-A CP1L-L20DR-D CP1L-L20DT-A CP1L-L20DT-D CP1L-L20DT1-D	12	8	1 Unit max. Inputs: 24 Outputs: 16	Max.: 60 points Inputs: 36 points Outputs: 24 points
	14 points	CP1L-L14DR-A CP1L-L14DR-D CP1L-L14DT-A CP1L-L14DT-D CP1L-L14DT1-D	8	6	1 Unit max. Inputs: 24 Outputs: 16	Max.: 54 points Inputs: 32 points Outputs: 22 points
	10 points	CP1L-L10DR-A CP1L-L10DR-D CP1L-L10DT-A CP1L-L10DT-D CP1L-L10DT1-D	6	4	0 Unit max. Inputs: 0 Outputs: 0	Max.: 10 points Inputs: 6 points Outputs: 4 points

CP-series Expansion I/O Units

Appearance	Model	Normal inputs	Normal outputs	Weight
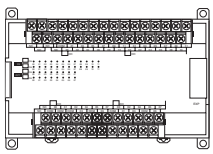	CP1W-40EDR CPM1A-40EDR	24 VDC: 24 inputs	16 relay outputs	380 g max.
	CP1W-40EDT CPM1A-40EDT		16 transistor outputs (sinking)	320 g max.
	CP1W-40EDT1 CPM1A-40EDT1		16 transistor outputs (sourcing)	
	CP1W-32ER	None	32 relay outputs	465 g max.
	CP1W-32ET		32 transistor outputs (sinking)	325 g max.
	CP1W-32ET1		32 transistor outputs (sourcing)	
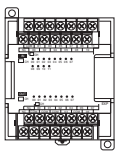	CP1W-20EDR1 CPM1A-20EDR1	24 VDC: 12 inputs	8 relay outputs	300 g max.
	CP1W-20EDT CPM1A-20EDT		8 transistor outputs (sinking)	
	CP1W-20EDT1 CPM1A-20EDT1		8 transistor outputs (sourcing)	
	CP1W-16ER CPM1A-16ER	None	16 relay outputs	280 g max.
	CP1W-16ET		16 transistor outputs (sinking)	225 g max.
	CP1W-16ET1		16 transistor outputs (sourcing)	

Appearance	Model	Normal inputs	Normal outputs	Weight
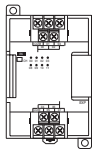	CP1W-8ED CPM1A-8ED	24 VDC: 8 inputs	None	200 g max.
	CP1W-8ER CPM1A-8ER	None	8 relay outputs	250 g max.
	CP1W-8ET CPM1A-8ET		8 transistor outputs (sinking)	
	CP1W-8ET1 CPM1A-8ET1		8 transistor outputs (sinking)	

CP-series Expansion Units

Name and appearance	Model	Specifications			Weight
Analog I/O Units 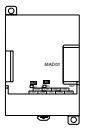 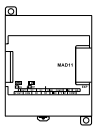	CPM1A-MAD01	2 analog inputs	0 to 10 V/1 to 5 V/4 to 20 mA	Resolution: 256	150 g max.
		1 analog output	0 to 10 V/–10 to +10 V/4 to 20 mA		
	CP1W-MAD11 CPM1A-MAD11	2 analog inputs	0 to 5 V/1 to 5 V/0 to 10 V/–10 to +10 V/0 to 20 mA/4 to 20 mA	Resolution: 6,000	
		1 analog output	1 to 5 V/0 to 10 V/–10 to +10 V/0 to 20 mA/4 to 20 mA		
Analog Input Units 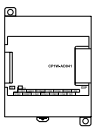	CP1W-AD041 CPM1A-AD041	4 analog inputs	0 to 5 V/1 to 5 V/0 to 10 V/–10 to +10 V/ 0 to 20 mA/ 4 to 20 mA	Resolution: 6,000	200 g max.
Analog Output Units 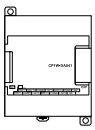	CP1W-DA021	2 analog outputs	1 to 5 V/0 to 10 V/ –10 to +10 V/ 0 to 20 mA/ 4 to 20 mA		
	CP1W-DA041 CPM1A-DA041	4 analog outputs			
Temperature Sensor Units 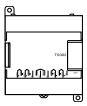	CP1W-TS001 CPM1A-TS001	2 inputs	Thermocouple input K, J		250 g max.
	CP1W-TS002 CPM1A-TS002	4 inputs			
	CP1W-TS101 CPM1A-TS101	2 inputs	Platinum resistance thermometer input Pt100, JPt100		
	CP1W-TS102 CPM1A-TS102	4 inputs			

Name and appearance	Model	Specifications	Weight
DeviceNet I/O Link Unit 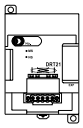	CPM1A-DRT21	As a DeviceNet Slave, 32 inputs and 32 outputs are allocated.	200 g max.
CompoBus/S I/O Link Unit	CP1W-SRT21 CPM1A-SRT21	As a CompoBus/S slave, 8 inputs and 8 outputs are allocated.	200 g max.

1-2-3 Restrictions on System Configuration

The following restrictions apply to the CP-series Expansion Units and CP-series Expansion I/O Units that can be connected to CP1L CPU Units.

■ Number of Expansion Units and Expansion I/O Units Connected

A maximum of three Units can be connected to a CPU Unit with 30, 40 or 60 I/O points and one Unit can be connected to a CPU Unit with 20 or 14 I/O points.

■ Mounting Restriction

When connecting CP-series or CPM1A-series Expansion Units or Expansion I/O Units to a CPU Unit with AC power, provide a space of approximately 10 mm between the CPU Unit and the first Expansion Unit or Expansion I/O Unit.

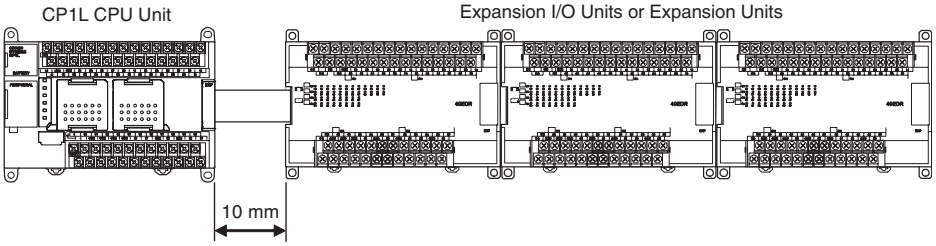

If sufficient space cannot be provided between the CPU Unit and the first Expansion Unit or Expansion I/O Unit, use the PLC in an ambient temperature of 0 to 50°C.

■ Restrictions in the External Power Supply Capacity

The following restrictions apply when using the external power supply from a CPU Unit with AC power.

CPU Units with 30, 40 or 60 I/O Points and AC Power (CP1L-M□□DR-A and CP1L-M□□DT□-A)

When CP1W or CPM1A Expansion Units or Expansion I/O Units are connected to a CPU Unit with 30, 40 or 60 I/O Points and AC Power (CP1L-M□□DR-A and CP1L-M□□DT-A), it may not be possible to use the entire 300 mA from the external power supply due to restrictions in the power supply capacity. The entire 300 mA from the external power supply can be used if Expansion Units and Expansion I/O Units are not connected.

Calculation Examples of Restrictions in External Power Supply Capacity

Calculate the external power supply capacity using the following calculation example.

Item	CPU Unit	Expansion Unit			Total	Restriction
		1st Unit	2nd Unit	3rd Unit		
	CP1L-M40DR-A	CP1W-DA041	CP1W-DA041	CP1W-DA041		
5 V	0.22 A	0.08 A	0.08 A	0.08 A	0.46 A	
24 V	0.08 A	0.124 A	0.124 A	0.124 A	0.452 A	
Power consumption	5 V × 0.46 A = 2.3 W 24 V × 0.452 A = 10.848 W				13.148 W	≤ 18.5 W
Applicable external power supply capacity	18.5 W (total external power supply capacity) − 13.148 W = 5.352 W 5.352 W/24V = 0.223 A				0.223 A	≤ 0.3 A
	Note If the results exceeds 0.3 A, reduce the current consumption to 0.3 A or less.					

CPU Units with 14 or 20 I/O Points and AC Power (CP1L-L□□DR-A and CP1L-L□□DT□-A)

When CP1W or CPM1A Expansion Units or Expansion I/O Units are connected to a CPU Unit with 14 or 20 I/O Points and AC Power (CP1L-L□□DR-A and CP1L-L□□DT-A), the external power supply cannot be used. If no Expansion Units or Expansion I/O Units are connected, up to 200 mA can be used.

CPU Units with DC Power

CPU Units with DC power do not have an external power supply.

■ Restrictions on the number of simultaneously ON output points

CP1W-32ER/32ET/32ET1's maximum number of simultaneously ON points is 24 (75%).

■ Restrictions Imposed by Ambient Temperature

There are restrictions in the power supply voltage and output load current imposed by the ambient temperature for CPU Units with DC power. Use the CPU Unit within the following ranges of power supply voltage and output load current.

CPU Units with Relay Outputs (CP1L-□□□DR-D)

Relay Output Load Current Derating Curves for CPU Units and Expansion I/O Units

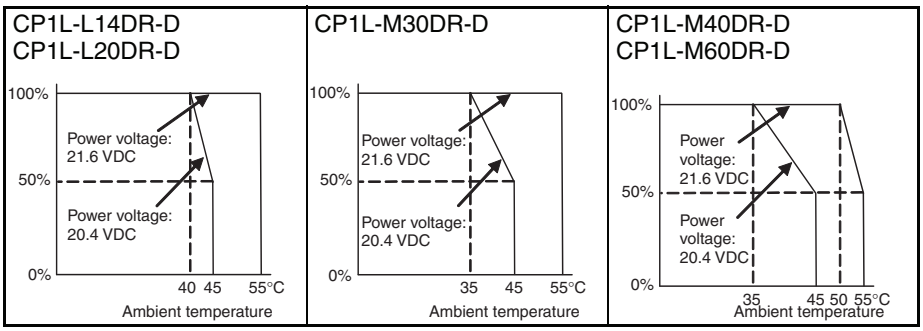

Note The above restrictions, apply to the relay output load current from the CPU Unit even if Expansion I/O Units are not connected.

Using CP1W-8ER/16ER/20EDR1/32ER/40EDR or CPM1A-8ER/16ER/20EDR1/40EDR Expansion I/O Units with CPU Units with Transistor Outputs (CP1L-□□□DT□-D)

Relay Output Load Current Derating Curves for Expansion I/O Units

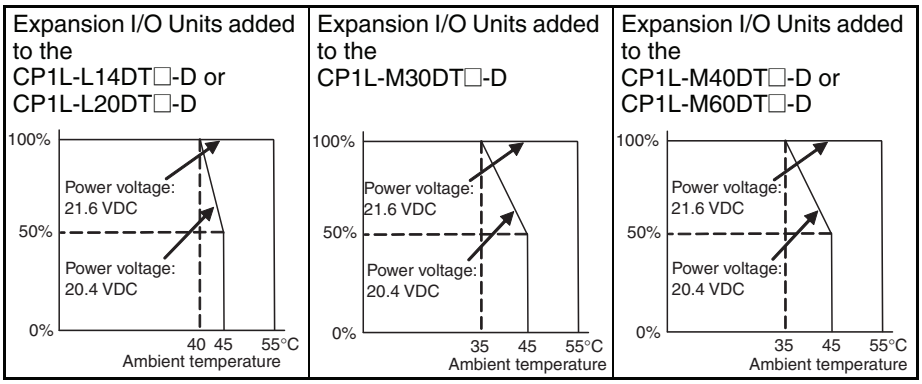

Note There are no restrictions on the transistor output load current from the CPU Unit.

CPU Units with AC Power

There are no restrictions on the output load current from CPU Units with AC power.

1-3 Connecting the CX-Programmer

The CX-Programmer (version 7.3 or higher), which runs on Windows, can be used with CP-series CP1L PLCs with 10 I/O points. The CX-Programmer (version 7.1 or higher), which runs on Windows, can be used with CP-series CP1L PLCs with 14, 20, 30, 40 or 60 I/O points. Computers running Support Software (e.g., the CX-Programmer) can be connected to the USB port or to a serial port.

Note A Programming Console cannot be used with CP1L PLCs.

1-3-1 Connecting with a Commercially Available USB Cable

Connect the computer running the CX-One Support Software (e.g., the CX-Programmer) using a commercially available USB cable to the peripheral USB port on the CPU Unit.

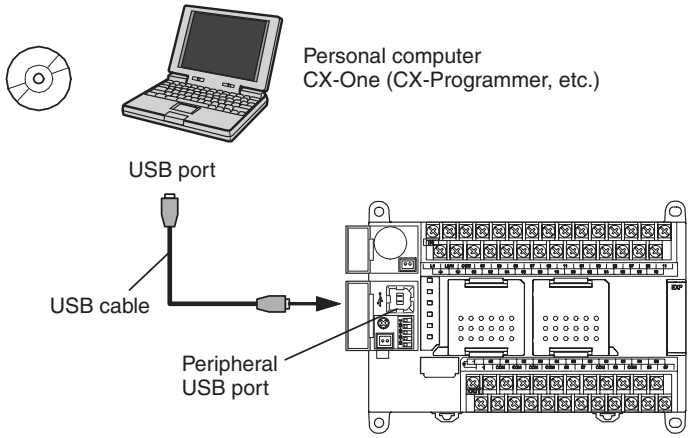

Restrictions when Connecting by USB

In conformity with USB specifications, the following restrictions apply when connecting a computer running Support Software.

- A USB connection is possible for only one CP-series PLC from a single computer. It is not possible to connect multiple PLCs simultaneously.
- Do not disconnect the USB cable while the Support Software is connected online. Before disconnecting the USB cable, be sure to place the application in offline status. If the USB cable is disconnected while online, the situations described below will occur as a result of OS error.
  - Windows Me, 2000, or XP:
    The Support Software cannot be returned to online status by simply reconnecting the USB cable. First return the Support Software to offline status, and then reconnect the USB cable. Then perform the online connection procedure for the Support Software.
  - Windows 98:
    If the USB cable is disconnected while online, an error message may be displayed on a blue screen. If that occurs, it will be necessary to reboot the computer.

The peripheral USB port (conforming to USB 1.1, B connector) is a dedicated port for connecting Support Software, such as the CX-Programmer.

Items Required for USB Connection

Operating system	Windows 98, Me, 2000, or XP
Support Software	CX-Programmer Ver. 6.1 (CX-One Ver. 1.1)
USB driver	Included with above Support Software.
USB cable	USB 1.1(or 2.0) cable (A connector-B connector), 5 m max.

Installing the USB Driver

The procedure for first connecting a computer to the CP1L peripheral USB port is described below.

It is assumed that the Support Software has already been installed in the computer.

Windows XP

Turn ON the power supply to the CP1L, and connect USB cable between the USB port of the computer and the peripheral USB port of the CP1L.

After the cable has been connected, the computer will automatically recognize the device and the following message will be displayed.

1,2,3... 1. If the following window appears, select the *No, not this time* Option and then click the **Next** Button. This window is not always displayed.

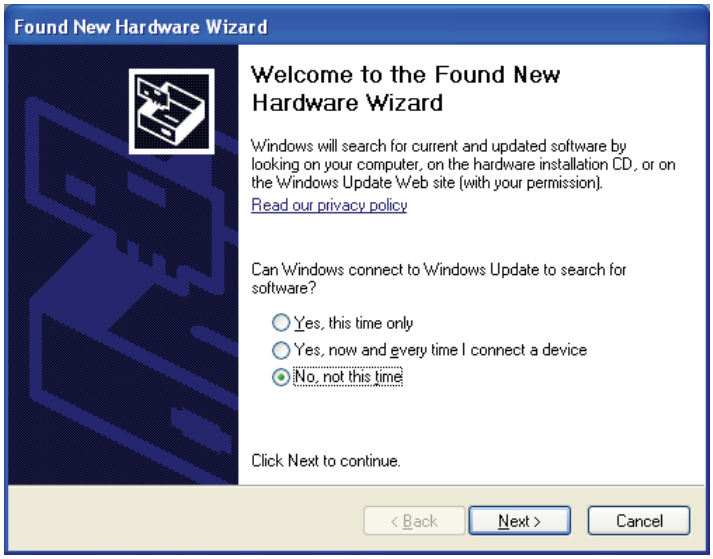

2. The following window will be displayed. Select the *Install from a list of specific location* Option and then click the **Next** Button.

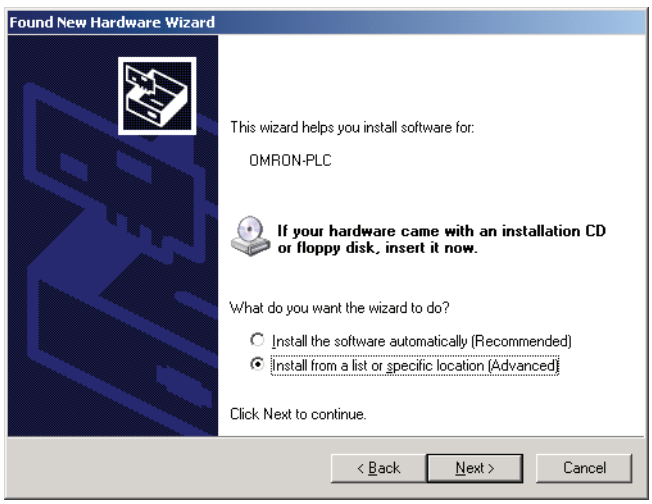

3. The following window will be displayed. Click the **Browse** Button for the *Include this location in the search* Field, specify C:\Program Files\OMRON\CX-Server\USB\win2000_XP\Inf, and then click the **Next** Button. The driver will be installed. ("C:\" indicates the installation drive and may be different on your computer.)

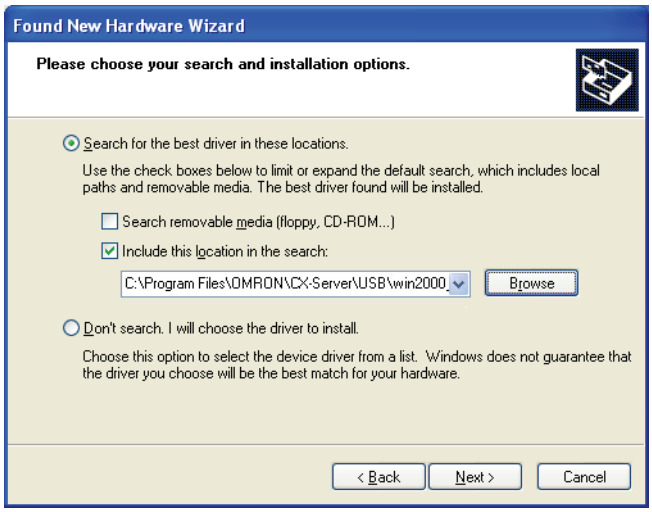

4. Ignore the following window if it is displayed and click the **Continue Anyway** Button.

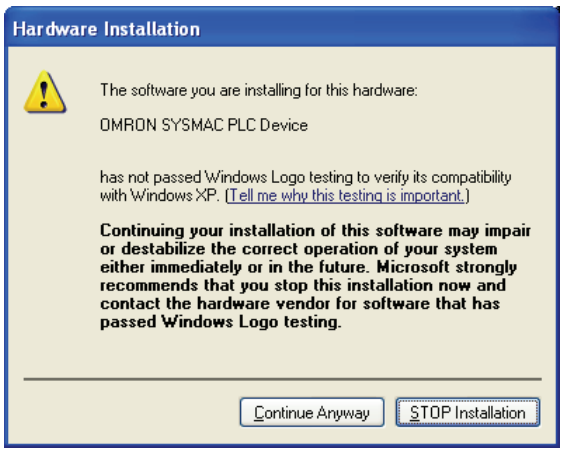

5. The following window will be displayed if the installation is completed normally. Click the **Finish** Button.

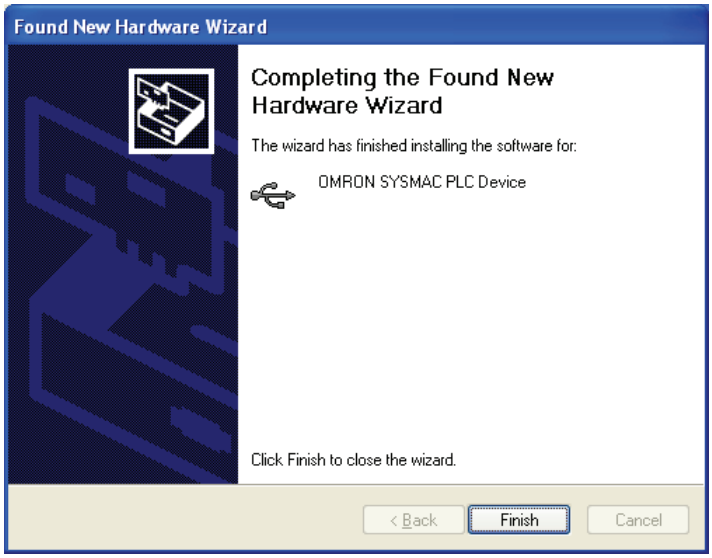

Windows 2000

Turn ON the power supply to the CP1L, and connect USB cable between the USB port of the computer and the peripheral USB port of the CP1L.

After the cable has been connected, the computer will automatically recognize the device and the following message will be displayed.

1,2,3... 1. The following message will be displayed. Click the **Next** Button.

2. The following window will be displayed.

3. Select the *Search for a suitable driver for the device (recommended)* Option and then click the **Next** Button. The following window will be displayed. From the list in the window, select the *Specify location* Checkbox and then click the **Next** Button.

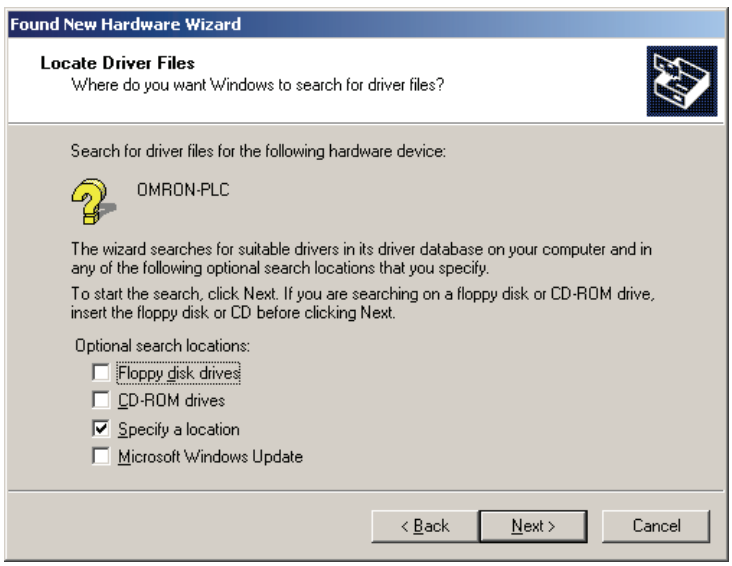

4. Click the **Browse** Button, specify C:\Program Files\OMRON\CX-Server\USB\win2000_XP\Inf, and then click the **Next** Button. (“C:\” indicates the installation drive and may be different on your computer.)

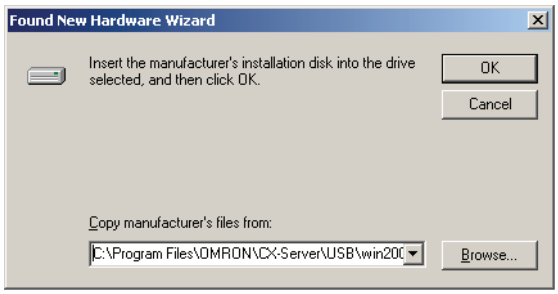

5. A search will be made for the driver and the following window will be displayed. Click the **Next** Button. The driver will be installed.

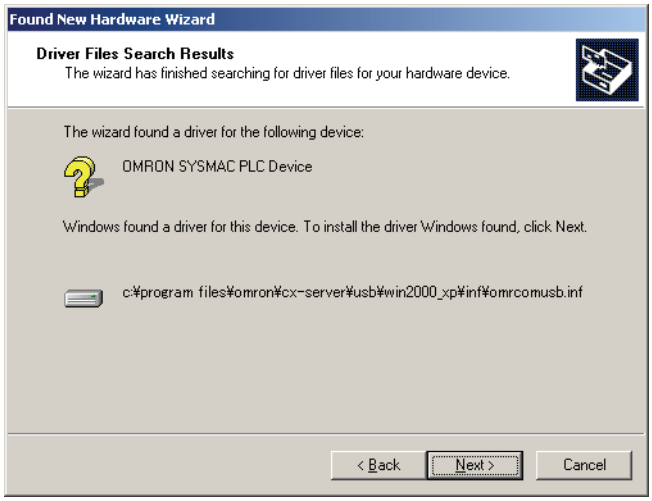

6. After the driver has been successfully installed, the following window will be displayed. Click the **Finish** Button.

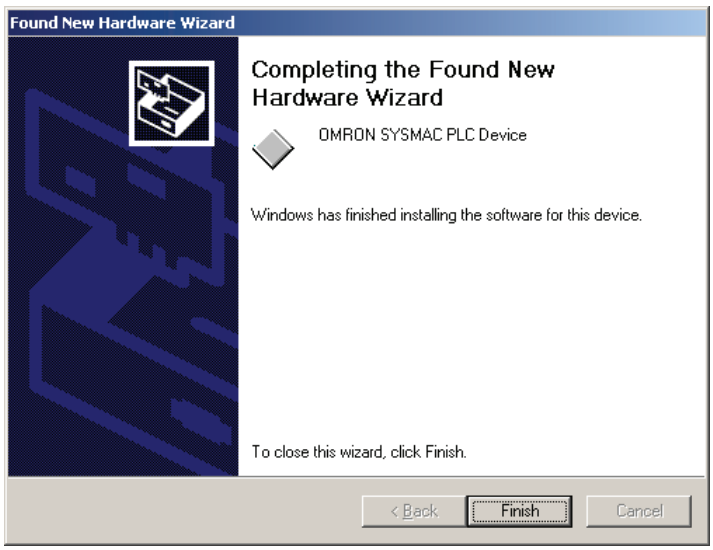

Connection Setup Using the CX-Programmer

1,2,3... 1. Select *CP1L* as the device type in the Change PLC Dialog Box and confirm that *USB* is displayed in the *Network Type* Field.

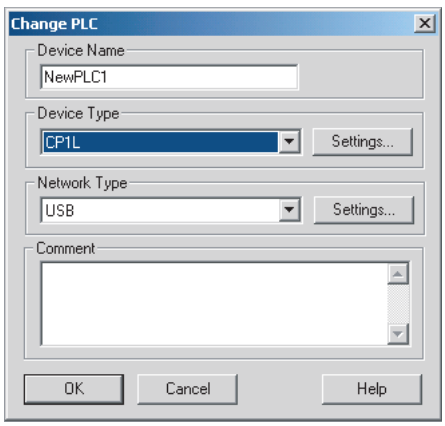

2. Click the **OK** Button to finish setting the PLC model. Then connect to the CP1L by executing the CX-Programmer's online connection command.

Checking after Installation

1,2,3...

1. Display the Device Manager at the computer.
2. Click *USB (Universal Serial Bus) Controller*, and confirm that *OMRON SYSMAC PLC Device* is displayed.

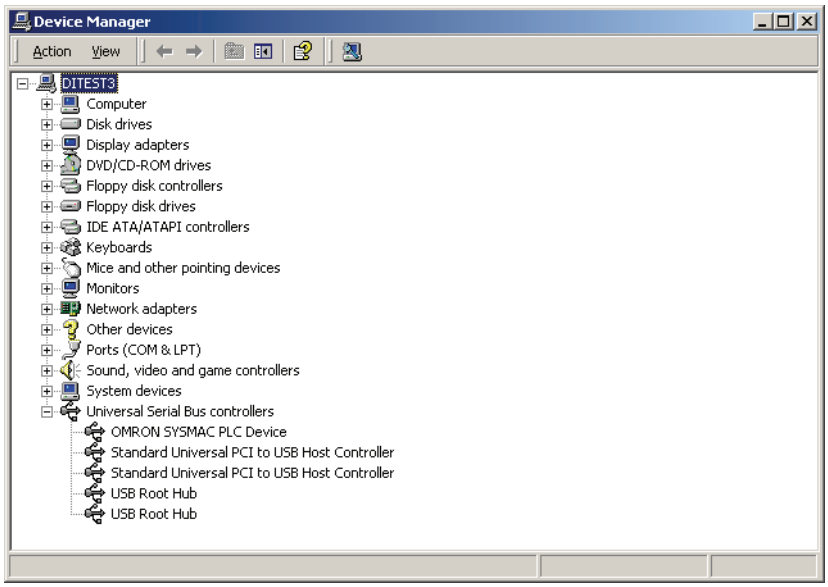

Re-installing the USB Driver

If the USB driver installation fails for some reason or is cancelled in progress, the USB driver must be reinstalled.

Checking USB Driver Status

1,2,3...

1. Display the Device Manager on the computer.
2. If *USB Device* is displayed for *Other devices*, it means that the USB driver installation has failed.

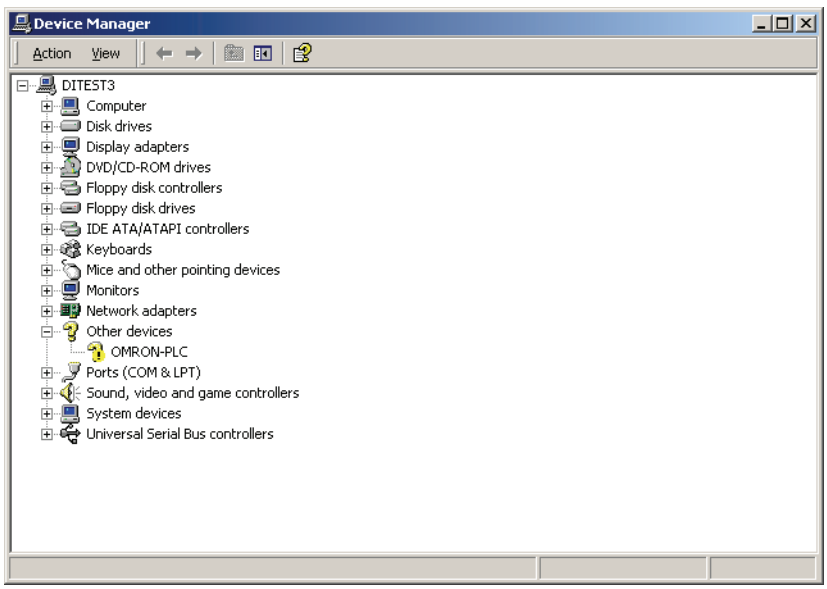

Reinstalling the USB Driver

1,2,3...

1. Right-click *USB Device* and select ***Delete*** from the pop-up menu to delete the driver.
2. Reconnect the USB cable. The USB Driver Installation Window will be displayed.
3. Reinstall the USB driver.

1-3-2 Connecting to a Serial Port

Mounting a CP1W-CIF01 RS-232C Option Board in a CP1L Option Board slot makes it possible to connect Support Software with serial communications, just as with previous models.

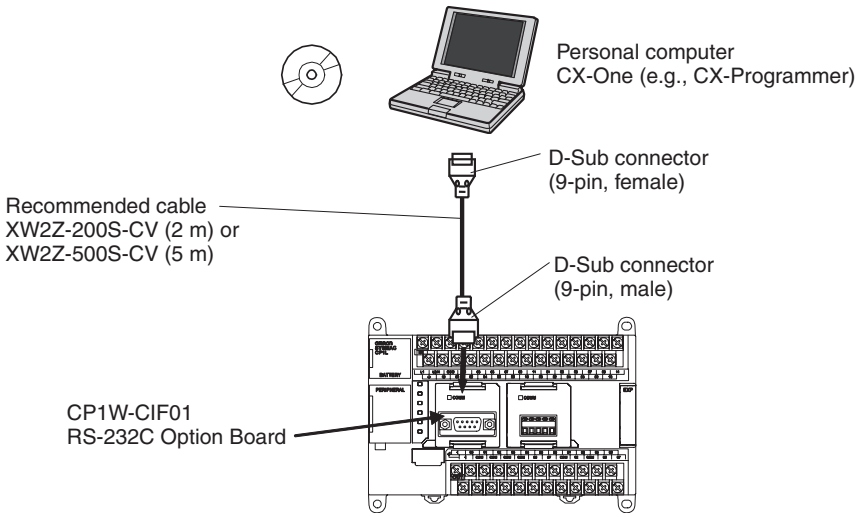

Connect the CX-Programmer to the RS-232C port of the CP1W-CIF01 Option Board by XW2Z-200S-CV/500S-CV RS-232C cable.

Connection Method

Connect the Programming Device using the Connecting Cable that is appropriate for the serial communications mode of the computer and CPU Unit.

Computer		Connecting Cable		CP1L CPU Unit	
Model	**Connector**	**Model**	**Length**	**Connector**	**Serial communications mode**
IBM PC/AT or compatible	D-Sub 9 pin, male	XW2Z-200S-CV	2 m	D-Sub 9 pin, female (With a CP1W-CIF01 RS-232C Option Board mounted in Option Board Slot 1 or 2.)	Peripheral bus or Host Link (SYSWAY)
		XW2Z-500S-CV	5 m		

Serial Communications Mode

Serial communications mode	Features	CPU Unit setting method
Peripheral bus (toolbus)	This is the faster mode, so it is generally used for CX-Programmer connections. • Only 1: 1 connections are possible. • When a CP1L CPU Unit is used, the baud rate is automatically detected by the Support Software.	Turn ON pins SW4 (Serial Port 1) and SW5 (Serial Port 2) on the DIP switch on the front panel of the CPU Unit. These settings enable connection by peripheral bus regardless of the serial port settings in the PLC Setup.
Host Link (SYSWAY)	A standard protocol for host computers with either 1: 1 or 1: N connections. • Slower than the peripheral bus mode. • Allows modem or optical adapter connections, or long-distance or 1: N connections using RS-422A/485.	Turn OFF pins SW4 (Serial Port 1) and SW5 (Serial Port 2) on the DIP switch on the front panel of the CPU Unit. The mode will then be determined by the serial port settings in the PLC Setup. The default settings are for Host Link with a baud rate of 9,600 bits/s, 1 start bit, data length of 7 bits, even parity, and 2 stop bits.

Note When a Serial Communications Option Board is mounted in Option Board Slot 1, it is called “Serial Port 1.” When mounted in Option Board Slot 2, it is called “Serial Port 2.”

1-4 Function Charts

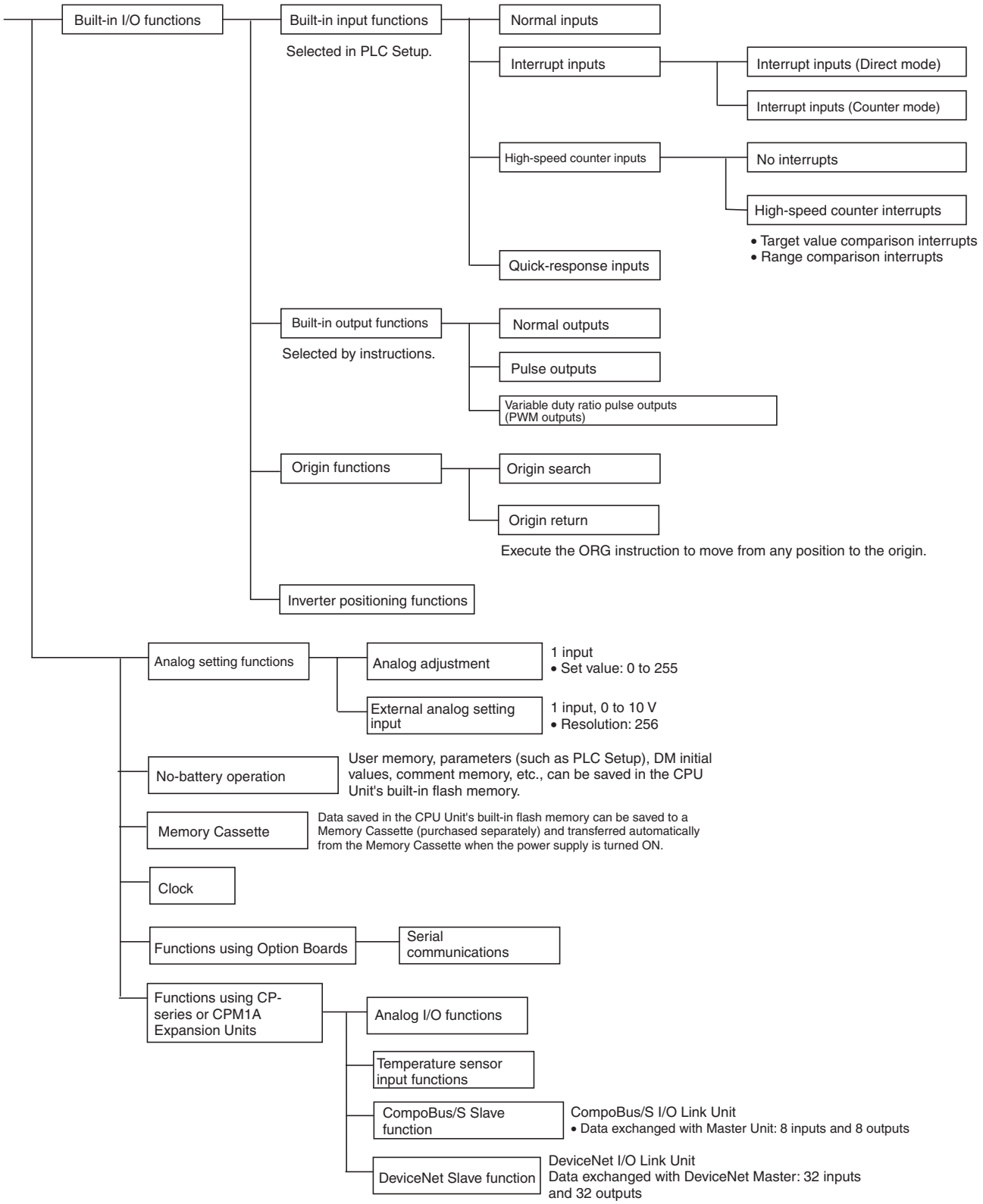

1-5 Function Blocks

Function blocks can be used in programming SYSMAC CP-series PLCs.

1-5-1 Overview of Function Blocks

A function block is a basic program element containing a standard processing function that has been defined in advance. Once the function block has been defined, the user just has to insert the function block in the program and set the I/O in order to use the function.

As a standard processing function, a function block is not created with actual physical addresses, but local variables. The user sets parameters (addresses or values) in those variables to use the function block. The addresses used for the variables themselves are automatically assigned by the system (CX-Programmer) each time they are placed in the program.

In particular, each function block is saved by the CX-Programmer as an individual file that can be reused with programs for other PLCs. This makes it possible to create a library of standard processing functions.

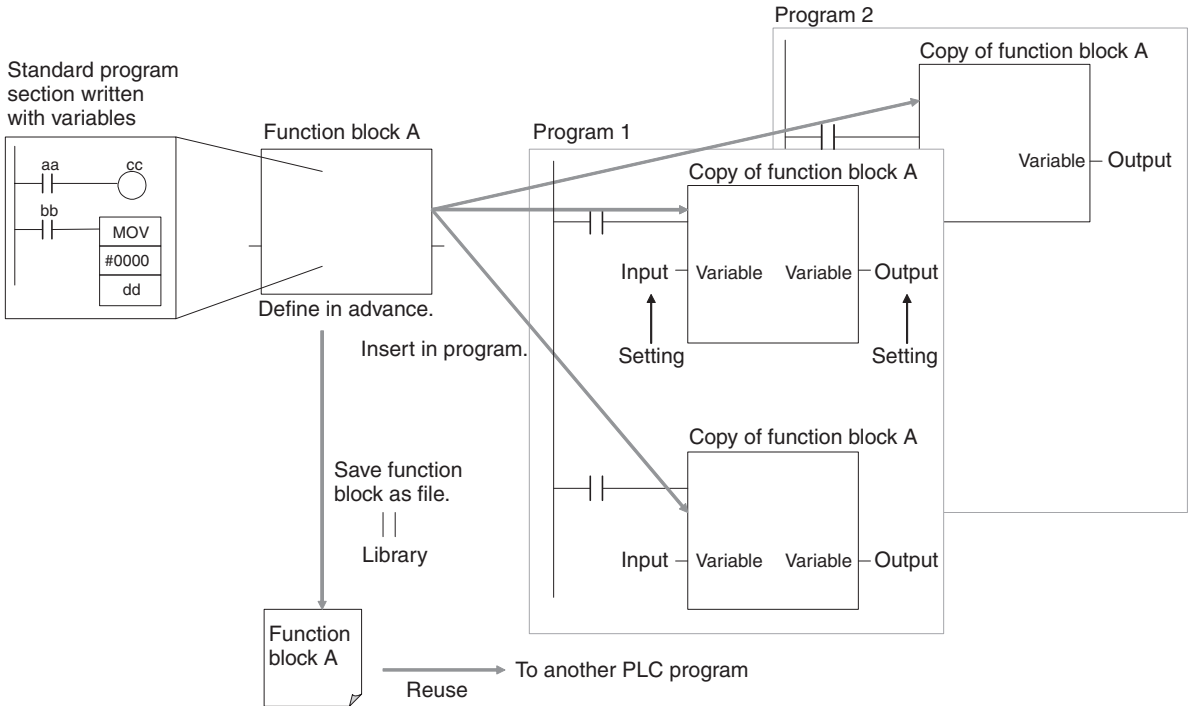

1-5-2 Advantages of Function Blocks

Function blocks allow complex programming units to be reused easily. Once standard program sections have been created as function blocks and saved in files, they can be reused just by placing a function block in a program and setting the parameters for the function block's I/O. Reusing standardized function blocks reduces the time required for programming/debugging, reduces coding errors, and makes programs easier to understand.

Structured Programming

Structured programs created with function blocks have better design quality and required less development time.

Easy-to-read "Block Box" Design

The I/O operands are displayed as local variable names in the program, so the program is like a "black box" when entering or reading the program and no extra time is wasted trying to understand the internal algorithm.

Different Processes Easily Created from a Single Function Block

Many different processes can be created easily from a single function block by using input variables for the parameters (such as timer SVs, control constants, speed settings, and travel distances) in the standard process.

Reduced Coding Errors

Coding mistakes can be reduced, because blocks that have already been debugged can be reused.

Data Protection

The local variables in the function block cannot be accessed directly from the outside, so the data can be protected. (Data cannot be changed unintentionally.)

Improved Reusability through Programming with Variables

The function block's I/O is entered as local variables, so the data addresses in the function block do not have to be changed as they do when copying and reusing a program section.

Creating Libraries

Processes that are independent and reusable (such as processes for individual steps, machinery, equipment, or control systems) can be saved as function block definitions and converted to library functions.

The function blocks are created with local variable names that are not tied to physical addresses, so new programs can be developed easily just by reading the definitions from the file and placing them in a new program.

Nesting Multiple Languages

Mathematical expressions can be entered in structured text (ST) language.

Nesting function blocks is supported for CX-Programmer Ver. 6.0 or higher. For example, it is possible to express only special operations in ST language within a function block in a ladder diagram.

Function block (ladder language)

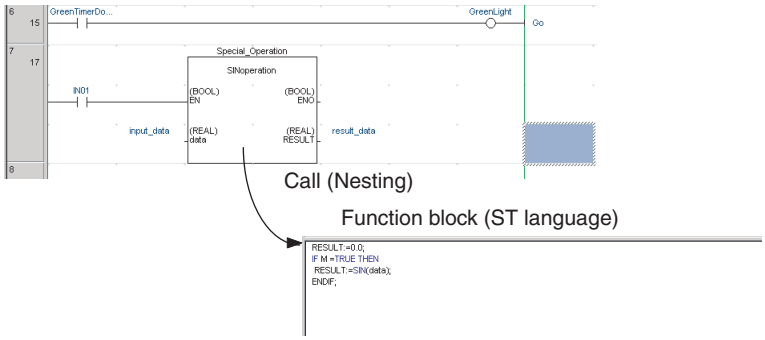

For details on using function blocks, refer to the *CX-Programmer Ver. 7.0 Operation Manual: Function Blocks* (Cat. No. W447).

SECTION 2
Nomenclature and Specifications

This section describes the names and functions of CP1L parts and provides CP1L specifications.

2-1 Part Names and Functions 38
2-1-1 CP1L CPU Units 38
2-1-2 CP1W-CIF01 RS-232C Option Boards 41
2-1-3 CP1W-CIF11/CIF12 RS-422A/485 Option Boards 42
2-2 Specifications 43
2-2-1 CP1L CPU Units 43
2-2-2 I/O Memory Details 50
2-2-3 I/O Specifications 51
2-2-4 CP/CPM1A-series Expansion I/O Unit I/O Specifications 69
2-3 CP1L CPU Unit Operation 73
2-3-1 Overview of CPU Unit Configuration 73
2-3-2 Flash Memory Data Transfers 77
2-3-3 Memory Cassette Data Transfers 79
2-4 CPU Unit Operation 81
2-4-1 General Flow 81
2-4-2 I/O Refreshing and Peripheral Servicing 82
2-4-3 I/O Refresh Methods 82
2-4-4 Initialization at Startup 84
2-5 CPU Unit Operating Modes 85
2-5-1 Operating Modes 85
2-5-2 Status and Operations in Each Operating Mode 85
2-5-3 Operating Mode Changes and I/O Memory 86
2-5-4 Startup Mode Setting 86
2-6 Power OFF Operation 87
2-6-1 Overview 87
2-6-2 Instruction Execution for Power Interruptions 88
2-7 Computing the Cycle Time 89
2-7-1 CPU Unit Operation Flowchart 89
2-7-2 Cycle Time Overview 90
2-7-3 Functions Related to the Cycle Time 91
2-7-4 I/O Refresh Times for PLC Units 93
2-7-5 Cycle Time Calculation Example 93
2-7-6 Online Editing Cycle Time Extension 94
2-7-7 I/O Response Time 95
2-7-8 Interrupt Response Times 96
2-7-9 Serial PLC Link Response Performance 97
2-7-10 Pulse Output Start Time 98
2-7-11 Pulse Output Change Response Time 98

2-1 Part Names and Functions

2-1-1 CP1L CPU Units

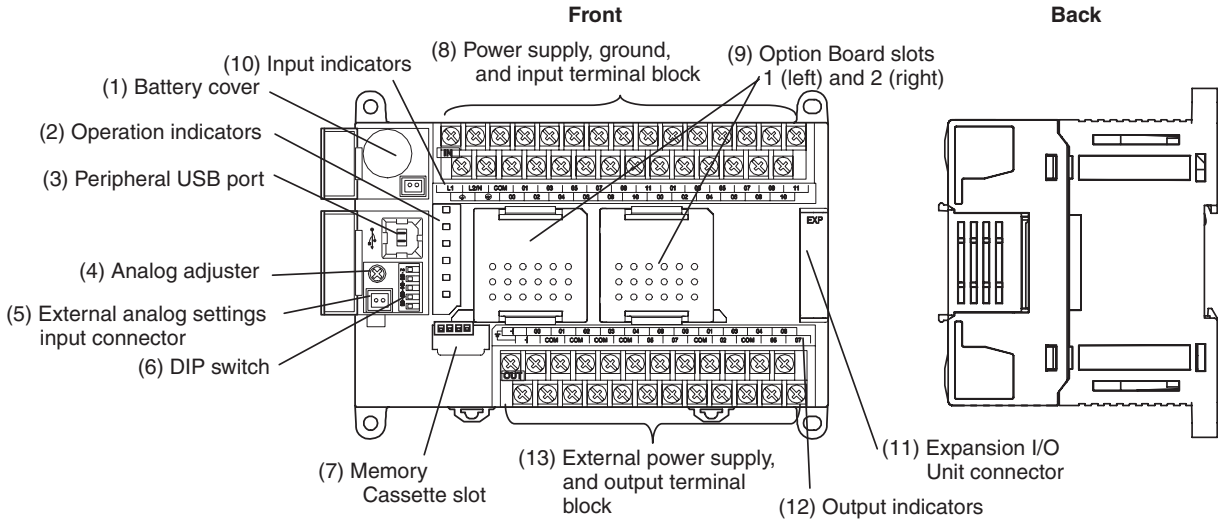

(1) Battery Cover
Covers the location where the battery is stored.

(2) Operation Indicators
Show CP1L operation status.

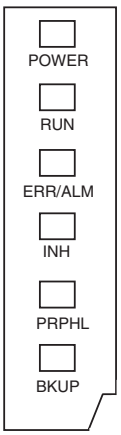

POWER (Green)	Lit	Power is ON.
	Not lit	Power is OFF.
RUN (Green)	Lit	The CP1L is executing a program in either RUN or MONITOR mode.
	Not lit	Operation is stopped in PROGRAM mode or due to a fatal error.
ERR/ALM (Red)	Lit	A fatal error (including FALS execution) or a hardware error (WDT error) has occurred. CP1L operation will stop and all outputs will be turned OFF.
	Flashing	A non-fatal error has occurred (including FAL execution). CP1L operation will continue.
	Not lit	Operation is normal.
INH (Yellow)	Lit	The Output OFF Bit (A500.15) has turned ON. All outputs will be turned OFF.
	Not lit	Operation is normal.
PRPHL (Yellow)	Flashing	Communications (either sending or receiving) are in progress through the peripheral USB port.
	Not lit	Other than the above.
BKUP (Yellow)	Lit	A user program, parameters, or Data Memory is being written or accessed in the built-in flash memory (backup memory). A user program, parameters, Data Memory, DM initial values, or comment memory is being written or accessed in a Memory Cassette. The BKUP indicator also lights while user programs, parameters, and Data Memory are being restored when the PLC power supply is turned ON. **Note** Do not turn OFF the PLC power supply while this indicator is lit.
	Not lit	Other than the above.

(3) Peripheral USB Port
Used for connecting to a personal computer for programming and monitoring by the CX-Programmer.

(4) Analog Adjuster
By turning the analog adjuster, it is possible to adjust the value of A642 within a range of 0 to 255. (Refer to *6-4 Analog Adjuster and External Analog Setting Input*.)

(5) External Analog Setting Input Connector
By applying 0 to 10 V of external voltage, it is possible to adjust the value of A643 within a range of 0 to 256. This input is not isolated. (Refer to *6-4 Analog Adjuster and External Analog Setting Input*.)

(6) DIP Switch

CPU Units with 30, 40 or 60 I/O Points

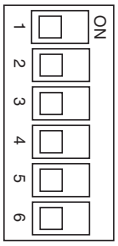

No.	Setting	Description	Application	Default
SW1	ON	User memory write-protected (See note.)	Used to prevent programs from being inadvertently overwritten.	OFF
	OFF	User memory not write-protected.		
SW2	ON	Data automatically transferred from Memory Cassette at startup.	Used to enable programs, Data Memory, or parameters saved on a Memory Cassette to be opened by the CPU Unit at startup.	OFF
	OFF	Data not transferred.		
SW3	ON	A395.12 ON	This pin enables controlling a bit in memory without using an input relay.	OFF
	OFF	A395.12 OFF		
SW4	ON	Used for peripheral bus.	Used to enable a Serial Communications Option Board mounted in Option Board Slot 1 to be used by the peripheral bus.	OFF
	OFF	According to PLC Setup.		
SW5	ON	Used for peripheral bus.	Used to enable a Serial Communications Option Board mounted in Option Board Slot 2 to be used by the peripheral bus.	OFF
	OFF	According to PLC Setup.		
SW6	OFF	Keep turned OFF.	---	OFF

Note The following data will be write-protected if pin SW1 is turned ON:

- The entire user program (all tasks)
- All data in parameter areas (such as the PLC Setup)

When SW1 is turned ON, the user program and the data in the parameter areas will not be cleared even if the All Clear operation is performed from a Peripheral Device (i.e., the CX-Programmer).

CPU Units with 10,14 or 20 I/O Points

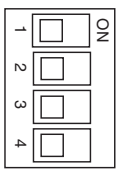

No.	Setting	Description	Application	Default
SW1	ON	User memory write-protected (See note.)	Used to prevent programs from being inadvertently overwritten.	OFF
	OFF	User memory not write-protected.		

No.	Setting	Description	Application	Default
SW2	ON	Data automatically transferred from Memory Cassette at startup.	Used to enable programs, Data Memory, or parameters saved on a Memory Cassette to be opened by the CPU Unit at startup.	OFF
	OFF	Data not transferred.		
SW3	ON	A395.12 ON	This pin enables controlling a bit in memory without using an input relay.	OFF
	OFF	A395.12 OFF		
SW4	ON	Used for peripheral bus.	Used to enable a Serial Communications Option Board mounted in Option Board Slot 1 to be used by the peripheral bus. This SW should be always OFF for CPU Units with 10 I/O points, because there is no option slot in CPU Units with 10 I/O points.	OFF
	OFF	According to PLC Setup.		

Note The following data will be write-protected if pin SW1 is turned ON:

- The entire user program (all tasks)
- All data in parameter areas (such as the PLC Setup)

When SW1 is turned ON, the user program and the data in the parameter areas will not be cleared even if the All Clear operation is performed from a Peripheral Device (i.e., the CX-Programmer).

(7) Memory Cassette Slot
Used for mounting a CP1W-ME05M Memory Cassette. When mounting a Memory Cassette, remove the dummy cassette.
Data, such as CP1L CPU Unit programs, parameters, and data memory, can be transferred to the Memory Cassette to be saved.

(8) Power Supply, Ground, and Input Terminal Block

Power supply terminals	Used to provide a 100- to 240-VAC or 24-VDC power supply.
Ground terminals	Functional ground (⏚): Connect this ground to strengthen noise immunity and to prevent electric shock. (AC power supply models only.) Protective ground (⏚): To prevent electric shock, ground to 100 Ω or less.
Input terminals	Used to connect input devices.

(9) Option Board Slots
The following Option Boards can be mounted in either slot 1 (left) or slot 2 (right).

- CP1W-CIF01 RS-232C Option Board
- CP1W-CIF11/CIF12 RS-422A/485 Option Board
- CP1W-DAM01 LCD Option Board
- CP1W-CIF41 Ethernet Option Board

⚠ **Caution** Always turn OFF the power supply to the PLC before mounting or removing an Option Board.

(10) Input Indicators
The input indicators light when input terminal contacts turn ON.

(11) Expansion I/O Unit Connector
CP-series Expansion I/O Units and Expansion Units (Analog I/O Units, Temperature Sensor Units, CompoBus/S I/O Link Units, or DeviceNet I/O Link Units) can be connected. Up to three Expansion Units or Expansion I/O Units can be connected to a CPU Unit with 30, 40 or 60 I/O points and one Expansion Unit or Expansion I/O Unit can be connected to a CPU Unit with 20 or 14 I/O points. (For details on using Expansion Units and Expansion I/O Units, refer to *SECTION 7 Using Expansion Units and Expansion I/O Units*.)

(12) Output Indicators
The output indicators light when output terminal contacts turn ON.

(13) External Power Supply and Output Terminal Block

External power supply terminals	CPU Units with AC power supply specifications have external 24-VDC, 300-mA, power supply terminals. (except for the CP1L-L□DR-A, which has a 200-mA power supply terminals). They can be used as service power supplies for input devices.
Output terminals	Used for connecting output devices.

2-1-2 CP1W-CIF01 RS-232C Option Boards

An RS-232C Option Board can be mounted to an Option Board slot on the CPU Unit. With a CPU Unit with 30, 40 or 60 I/O points, either Option Board slot may be used.

When mounting an Option Board, first remove the slot cover. Grasp both of the cover's up/down lock levers at the same time to unlock the cover, and then pull the cover out.

Then to mount the Option Board, check the alignment and firmly press it in until it snaps into place.

⚠ **Caution** Always turn OFF the power supply to the PLC before mounting or removing an Option Board.

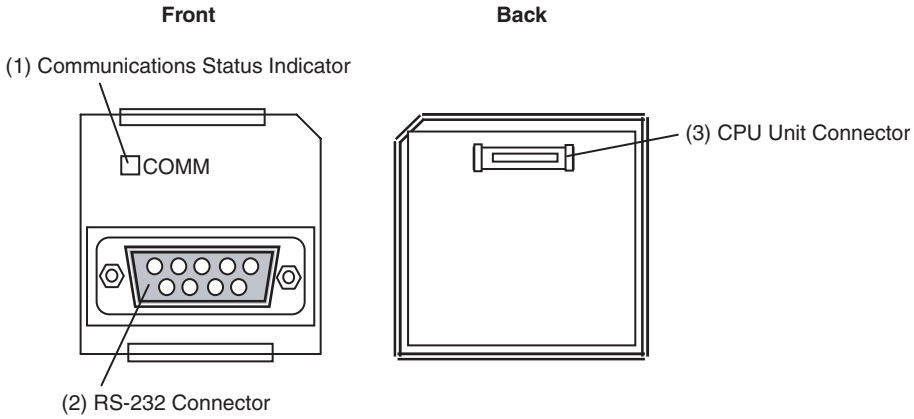

RS-232C Connector

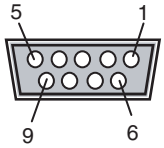

Pin	Abbr.	Signal name	Signal direction
1	FG	Frame Ground	---
2	SD (TXD)	Send Data	Output
3	RD (RXD)	Receive Data	Input
4	RS (RTS)	Request to Send	Output
5	CS (CTS)	Clear to Send	Input
6	5V	Power Supply	---
7	DR (DSR)	Data Set Retry	Input
8	ER (DTR)	Equipment Ready	Output
9	SG (0V)	Signal Ground	---
Connector hood	FG	Frame Ground	---

2-1-3 CP1W-CIF11/CIF12 RS-422A/485 Option Boards

An RS-422A/485 Option Board can be mounted to an Option Board slot on the CPU Unit. With a CPU Unit with 30, 40 or 60 I/O points, either Option Board slot may be used.

When mounting an Option Board, first remove the slot cover. Grasp both of the cover's up/down lock levers at the same time to unlock the cover, and then pull the cover out.

Then to mount the Option Board, check the alignment and firmly press it in until it snaps into place.

⚠ **Caution** Always turn OFF the power supply to the PLC before mounting or removing an Option Board.

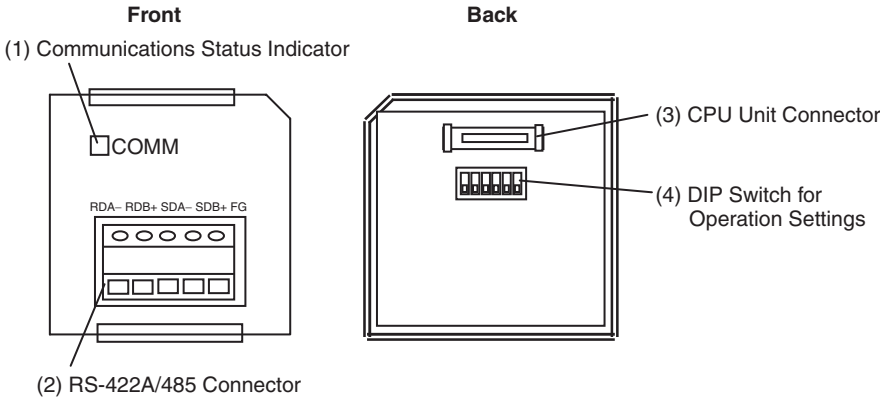

RS-422A/485 Terminal Block

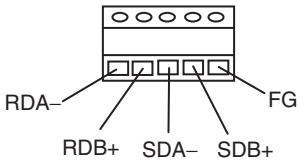

Tighten the terminal block screws to a torque of 0.28 N·m (2.5 Lb In.).

DIP Switch for Operation Settings

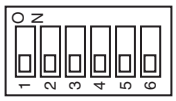

Pin	Settings		
1	ON	ON (both ends)	Terminating resistance selection
	OFF	OFF	
2	ON	2-wire	2-wire or 4-wire selection (See note 1.)
	OFF	4-wire	
3	ON	2-wire	2-wire or 4-wire selection (See note 1.)
	OFF	4-wire	
4	---	---	Not used.
5	ON	RS control enabled	RS control selection for RD (See note 2.)
	OFF	RS control disabled (Data always received.)	
6	ON	RS control enabled	RS control selection for SD (See note 3.)
	OFF	RS control disabled (Data always sent.)	

Note

(1) Set both pins 2 and 3 to either ON (2-wire) or OFF (4-wire).

(2) To disable the echo-back function, set pin 5 to ON (RS control enabled).

(3) When connecting to a device on the N side in a 1: N connection with the 4-wire method, set pin 6 to ON (RS control enabled).
Also, when connecting by the 2-wire method, set pin 6 to ON (RS control enabled).

2-2 Specifications

2-2-1 CP1L CPU Units

General Specifications

Power supply		AC power supply	DC power supply
Model numbers	**60 I/O points**	**CP1L-M60DR-A, CP1L-M60DT-A**	**CP1L-M60DR-D, CP1L-M60DT-D, or CP1L-M60DT1-D**
	40 I/O points	**CP1L-M40DR-A, CP1L-M40DT-A**	**CP1L-M40DR-D, CP1L-M40DT-D, or CP1L-M40DT1-D**
	30 I/O points	**CP1L-M30DR-A, CP1L-M30DT-A**	**CP1L-M30DR-D, CP1L-M30DT-D, or CP1L-M30DT1-D**
	20 I/O points	**CP1L-L20DR-A, CP1L-L20DT-A**	**CP1L-L20DR-D, CP1L-L20DT-D, or CP1L-L20DT1-D**
	14 I/O points	**CP1L-L14DR-A, CP1L-L14DT-A**	**CP1L-L14DR-D, CP1L-L14DT-D, or CP1L-L14DT1-D**
	10 I/O points	**CP1L-L10DR-A, CP1L-L10DT-A**	**CP1L-L10DR-D, CP1L-L10DT-D, or CP1L-L10DT1-D**
Power supply		100 to 240 VAC 50/60 Hz	24 VDC
Operating voltage range		85 to 264 VAC	20.4 to 26.4 VDC
Power consumption		50 VA max. (CP1L-M□DR-A) 50 VA max. (CP1L-M□DT-A) 30 VA max. (CP1L-L□DR-A) 30 VA max. (CP1L-L□DT-A)	See note 3. 20 W max. (CP1L-M□DR-D) 20 W max. (CP1L-M□DT□-D) 13 W max. (CP1L-L□DR-D) 13 W max. (CP1L-L□DT□-D)

Power supply		AC power supply	DC power supply
Model numbers	**60 I/O points**	**CP1L-M60DR-A, CP1L-M60DT-A**	**CP1L-M60DR-D, CP1L-M60DT-D, or CP1L-M60DT1-D**
	40 I/O points	**CP1L-M40DR-A, CP1L-M40DT-A**	**CP1L-M40DR-D, CP1L-M40DT-D, or CP1L-M40DT1-D**
	30 I/O points	**CP1L-M30DR-A, CP1L-M30DT-A**	**CP1L-M30DR-D, CP1L-M30DT-D, or CP1L-M30DT1-D**
	20 I/O points	**CP1L-L20DR-A, CP1L-L20DT-A**	**CP1L-L20DR-D, CP1L-L20DT-D, or CP1L-L20DT1-D**
	14 I/O points	**CP1L-L14DR-A, CP1L-L14DT-A**	**CP1L-L14DR-D, CP1L-L14DT-D, or CP1L-L14DT1-D**
	10 I/O points	**CP1L-L10DR-A, CP1L-L10DT-A**	**CP1L-L10DR-D, CP1L-L10DT-D, or CP1L-L10DT1-D**
Inrush current (See note 1.)		100 to 120 VAC inputs: 20 A max.(for cold start at room temperature.) 8 ms max. 200 to 240 VAC inputs: 40 A max.(for cold start at room temperature.) 8 ms max.	30 A max.(for cold start.) 20 ms max.
External power supply (See note 2.)		300 mA at 24 VDC (CP1L-M□DR-A) 300 mA at 24 VDC (CP1L-M□DT-A) 200 mA at 24 VDC (CP1L-L□DR-A) 200 mA at 24 VDC (CP1L-L□DT-A)	None
Insulation resistance		20 MΩ min. (at 500 VDC) between the external AC terminals and GR terminals	No insulation between primary and secondary DC power supplies.
Dielectric strength		2,300 VAC 50/60 Hz for 1 min between the external AC and GR terminals, leakage current: 5 mA max.	No insulation between primary and secondary DC power supplies.
Noise resistance		Conforms to IEC 61000-4-4 2 kV (power supply line)	
Vibration resistance		10 to 57 Hz, 0.075-mm amplitude, 57 to 150 Hz, acceleration: 9.8 m/s^2 in X, Y, and Z directions for 80 minutes each (time coefficient of 8 minutes × coefficient factor of 10 = total time of 80 minutes)	
Shock resistance		147 m/s^2 three times each in X, Y, and Z directions	
Ambient operating		0 to 55°C	
Ambient humidity		10% to 90% (with no condensation)	
Atmosphere		No corrosive gas.	
Ambient storage		−20 to 75°C (excluding battery)	
Terminal screw size		M3	
Power interrupt time		10 ms min.	2 ms min.
Weight		CP1L-M60D□-□: 820g max. CP1L-M40D□-□: 675 g max. CP1L-M30D□-□: 610 g max. CP1L-L20D□-□: 380 g max. CP1L-L14D□-□: 380 g max. CP1L-L10D□-□: 300 g max.	

Note

(1) The above values are for a cold start at room temperature for an AC power supply, and for a cold start for a DC power supply.

- A thermistor (with low-temperature current suppression characteristics) is used in the inrush current control circuitry for the AC power supply. The thermistor will not be sufficiently cooled if the ambient temperature is high or if a hot start is performed when the power supply has been OFF for only a short time, so in those cases the inrush current values may be higher (as much as two times higher) than those shown above.
- A capacitor delay circuit is used in the inrush current control circuitry for the DC power supply. The capacitor will not be charged if a hot start is performed when the power supply has been OFF for only a short time, so in those cases the inrush current values may be higher (as much as two times higher) than those shown above.

Always allow for this when selecting fuses and breakers for external circuits.

(2) Use the external power supply to power input devices. Do not use it to drive output devices.

(3) This is the rated value for the maximum system configuration. Use the following formula to calculate DC power consumption for CPU Units with DC power.

Formula:

DC-powered CP1L power consumption = 5-V current consumption × 5 V/70% (CP1L internal power efficiency) + 24-V current consumption × 1.1 (current fluctuation factor)

Calculation Example

	CPU Unit	Expansion Unit or Expansion I/O Unit			Total
		1st Unit	2nd Unit	3rd Unit	
System	CP1L-M40DR-D	CP1W-20EDT	CP1W-TS001	CP1W-DA041	
5 V	0.220 A	0.130 A	0.040 A	0.080 A	0.470 A
24 V	0.080 A	0.000 A	0.059 A	0.124 A	0.263 A

CP1L Power Consumption

= (0.47 A × 5 V/70% + 0.263 A × 24 V) × 1.1

= 10.64 W

The above calculation results show that a power supply with a capacity of 7 W or greater is required.

Current Consumption

CPU Units

I/O capacity	Model	Current consumption		External power supply
		5 V DC	24 V DC	24 V DC
60 I/O points	CP1L-M60DR-A	0.25 A	0.14 A	0.3 A max.
	CP1L-M60DR-D	0.25 A	0.14 A	---
	CP1L-M60DT-A	0.39 A	0.03 A	0.3 A max.
	CP1L-M60DT-D	0.39 A	0.03 A	---
	CP1L-M60DT1-D	0.39 A	0.03 A	---
40 I/O points	CP1L-M40DR-A	0.22 A	0.08 A	0.3 A max.
	CP1L-M40DR-D	0.22 A	0.08 A	---
	CP1L-M40DT-A	0.31 A	0.03 A	0.3 A max.
	CP1L-M40DT-D	0.31 A	0.03 A	---
	CP1L-M40DT1-D	0.31 A	0.03 A	---
30 I/O points	CP1L-M30DR-A	0.21 A	0.07 A	0.3 A max.
	CP1L-M30DR-D	0.21 A	0.07 A	---
	CP1L-M30DT-A	0.28 A	0.03 A	0.3 A max.
	CP1L-M30DT-D	0.28 A	0.03 A	---
	CP1L-M30DT1-D	0.28 A	0.03 A	---
20 I/O points	CP1L-L20DR-A	0.20 A	0.05 A	0.2 A max.
	CP1L-L20DR-D	0.20 A	0.05 A	---
	CP1L-L20DT-A	0.24 A	0.03 A	0.2 A max.
	CP1L-L20DT-D	0.24 A	0.03 A	---
	CP1L-L20DT1-D	0.24 A	0.03 A	---
14 I/O points	CP1L-L14DR-A	0.18 A	0.04 A	0.2 A max.
	CP1L-L14DR-D	0.18 A	0.04 A	---
	CP1L-L14DT-A	0.21 A	0.03 A	0.2 A max.
	CP1L-L14DT-D	0.21 A	0.03 A	---
	CP1L-L14DT1-D	0.21 A	0.03 A	---
10 I/O points	CP1L-L10DR-A	0.16 A	0.03 A	0.2 A max.
	CP1L-L10DR-D	0.16 A	0.03 A	---
	CP1L-L10DT-A	0.18 A	0.03 A	0.2 A max.
	CP1L-L10DT-D	0.18 A	0.03 A	---
	CP1L-L10DT1-D	0.18 A	0.03 A	---

Note

(1) The current consumption of the CP1W-ME05M Memory Cassette and CP1W-CIF01/11 Option Boards are included in the current consumption of the CPU Unit.

(2) The current consumption of the following is not included with the current consumption of the CPU Unit: CP1W-CIF12.

Unit	Model	Current consumption		External power supply
		5 V DC	24 V DC	
Interface Unit	CP1W-CIF12	0.075 A	---	---

(3) CPU Units with DC power do not provide an external power supply.

(4) The current consumptions given in the following table must be added to the current consumption of the CPU Unit if an Expansion Unit or Expansion I/O Unit is connected.

(5) The external power supply cannot be used if an Expansion Unit or Expansion I/O Unit is connected to a CPU Unit with 14 or 20 I/O points.

Expansion Units and Expansion I/O Units

Unit name		Model		Current consumption	
				5 VDC	24 VDC
Expansion I/O Units		40 I/O points 24 inputs 16 outputs	CP1W/CPM1A-40EDR	0.080 A	0.090 A
			CP1W/CPM1A-40EDT	0.160 A	---
			CP1W/CPM1A-40EDT1		
		32 outputs	CP1W-32ER	0.049 A	0.131 A
			CP1W-32ET	0.113 A	---
			CP1W-32ET1		
		20 I/O points 12 inputs 8 outputs	CP1W/CPM1A-20EDR1	0.103 A	0.044 A
			CP1W/CPM1A-20EDT	0.130 A	---
			CP1W/CPM1A-20EDT1		
		16 outputs	CP1W/CPM1A-16ER	0.042 A	0.090 A
			CP1W-16ET	0.076 A	---
			CP1W-16ET1		
		8 inputs	CP1W/CPM1A-8ED	0.018 A	---
		8 outputs	CP1W/CPM1A-8ER	0.026 A	0.044 A
			CP1W/CPM1A-8ET	0.075 A	---
			CP1W/CPM1A-8ET1		
Expansion Units	Analog Input Unit	4 inputs	CP1W/CPM1A-AD041	0.100 A	0.090 A
	Analog Output Unit	2 outputs	CP1W-DA021	0.040 A	0.095 A
		4 outputs	CP1W/CPM1A-DA041	0.080 A	0.124 A
	Analog I/O Units	2 inputs 1 output	CP1W/CPM1A-MAD01	0.066 A	0.066 A
			CP1W/CPM1A-MAD11	0.083 A	0.110 A
	Temperature Sensor Units	K or J thermocouples	CP1W/CPM1A-TS001	0.040 A	0.059 A
			CP1W/CPM1A-TS002		
		Pt or JPt platinum resistance thermometers	CP1W/CPM1A-TS101	0.054 A	0.073 A
			CP1W/CPM1A-TS102		
	CompoBus/S I/O Link Unit	8 inputs 8 outputs	CP1W/CPM1A-SRT21	0.029 A	---
	DeviceNet I/O Link Unit	32 inputs 32 outputs	CPM1A-DRT21	0.048 A	---

Note CP1W-32ER/32ET/32ET1's maximum number of simultaneously ON points is 24 (75%).

Characteristics

Type	M CPU Units			L CPU Units		
Model	**CP1L-M60DR-A CP1L-M60DR-D CP1L-M60DT-A CP1L-M60DT-D CP1L-M60DT1-D**	**CP1L-M40DR-A CP1L-M40DR-D CP1L-M40DT-A CP1L-M40DT-D CP1L-M40DT1-D**	**CP1L-M30DR-A CP1L-M30DR-D CP1L-M30DT-A CP1L-M30DT-D CP1L-M30DT1-D**	**CP1L-L20DR-A CP1L-L20DR-D CP1L-L20DT-A CP1L-L20DT-D CP1L-L20DT1-D**	**CP1L-L14DR-A CP1L-L14DR-D CP1L-L14DT-A CP1L-L14DT-D CP1L-L14DT1-D**	**CP1L-L10DR-A CP1L-L10DR-D CP1L-L10DT-A CP1L-L10DT-D CP1L-L10DT1-D**
Program capacity	10 Ksteps			5 Ksteps		
Control method	Stored program method					
I/O control method	Cyclic scan with immediate refreshing					
Program language	Ladder diagram					
Function blocks	Maximum number of function block definitions: 128 Maximum number of instances: 256 Languages usable in function block definitions: Ladder diagrams, structured text (ST)					

Type			M CPU Units			L CPU Units		
Model			CP1L-M60DR-A CP1L-M60DR-D CP1L-M60DT-A CP1L-M60DT-D CP1L-M60DT1-D	CP1L-M40DR-A CP1L-M40DR-D CP1L-M40DT-A CP1L-M40DT-D CP1L-M40DT1-D	CP1L-M30DR-A CP1L-M30DR-D CP1L-M30DT-A CP1L-M30DT-D CP1L-M30DT1-D	CP1L-L20DR-A CP1L-L20DR-D CP1L-L20DT-A CP1L-L20DT-D CP1L-L20DT1-D	CP1L-L14DR-A CP1L-L14DR-D CP1L-L14DT-A CP1L-L14DT-D CP1L-L14DT1-D	CP1L-L10DR-A CP1L-L10DR-D CP1L-L10DT-A CP1L-L10DT-D CP1L-L10DT1-D
Instruction length			1 to 7 steps per instruction					
Instructions			Approx. 500 (function codes: 3 digits)					
Instruction execution time			Basic instructions: 0.61 μs min. Special instructions: 4.1 μs min.					
Common processing time			0.38 ms					
Number of connectable Expansion Units and Expansion I/O Units			3 Units (CP Series or CPM1A)			1 Unit (CP Series or CPM1A)		0 Unit
Maximum number of I/O points			180 points (60 built in, 40 × 3 expansion)	160 points (40 built in, 40 × 3 expansion)	150 points (30 built in, 40 × 3 expansion)	60 points (20 built in, 40 × 1 expansion)	54 points (14 built in, 40 × 1 expansion)	10 points (10 built in)
Built-in terminals (Functions can be assigned.)	Built-in I/O		60 terminals (36 inputs and 24 outputs)	40 terminals (24 inputs and 16 outputs)	30 terminals (18 inputs and 12 outputs)	20 terminals (12 inputs and 8 outputs)	14 terminals (8 inputs and 6 outputs)	10 terminals (6 inputs and 4 outputs)
	Interrupt inputs	Direct mode	6 inputs				4 inputs	2 inputs
			Response time: 0.3 ms					
		Counter mode	6 inputs				4 inputs	2 inputs
			Response frequency: 5 kHz total, 16 bits Incrementing counter or decrementing counter					
	Quick-response inputs		6 points				4 points	2 points
			Min. input pulse width: 50 μs max.					
	High-speed counters		4 inputs/2 axes (24 VDC) • Single phase (pulse plus direction, up/down, increment), 100 kHz • Differential phases (4×), 50 kHz Value range: 32 bits, Linear mode or ring mode Interrupts: Target value comparison or range comparison					
Pulse outputs (Transistor output models only)	Pulse outputs		2 outputs, 1 Hz to 100 kHz (CCW/CW or pulse plus direction) Trapezoidal or S-curve acceleration and deceleration (Duty ratio: 50% fixed)					
	PWM outputs		2 outputs, 0.1 to 6,553.5 Hz or 1 to 32,800 Hz Variable duty ratio: 0.0% to 100.0% (in increments of 0.1% or 1%) Accuracy: +1%/-0% at 0.1 Hz to 10,000 Hz and +5%/-0% at 10,000 Hz to 32,800 Hz					
Analog settings	Analog adjuster		1 (Setting range: 0 to 255)					
	External analog setting		1 input (Resolution: 1/256, Input range: 0 to 10 V)					

Type		M CPU Units			L CPU Units		
Model		CP1L-M60DR-A CP1L-M60DR-D CP1L-M60DT-A CP1L-M60DT-D CP1L-M60DT1-D	CP1L-M40DR-A CP1L-M40DR-D CP1L-M40DT-A CP1L-M40DT-D CP1L-M40DT1-D	CP1L-M30DR-A CP1L-M30DR-D CP1L-M30DT-A CP1L-M30DT-D CP1L-M30DT1-D	CP1L-L20DR-A CP1L-L20DR-D CP1L-L20DT-A CP1L-L20DT-D CP1L-L20DT1-D	CP1L-L14DR-A CP1L-L14DR-D CP1L-L14DT-A CP1L-L14DT-D CP1L-L14DT1-D	CP1L-L10DR-A CP1L-L10DR-D CP1L-L10DT-A CP1L-L10DT-D CP1L-L10DT1-D
Serial port	Peripheral USB port	Supported. (1-port USB connector, type B): Special for a Peripheral Device such as the CX-Programmer. (Set the network classification to USB in the Peripheral Device's PLC model setting.) • Serial communications standard: USB 1.1					
	RS-232C port, RS-422A/485 port	Ports not provided as standard equipment. (M-type CPU Unit: 2 ports max., L-type CPU Unit: 1 port) The following Option Boards can be mounted: • CP1W-CIF01: One RS-232C port • CP1W-CIF11/CIF12: One RS-422A/485 port Applicable communications modes (same for all of the above ports): Host Link, NT Link (1: N mode), No-protocol, Serial PLC Link Slave, Serial PLC Link Master, Serial Gateway (conversion to CompoWay/F, conversion to Modbus-RTU), peripheral bus (See note.)					Not Support
Number of tasks		288 (32 cycle execution tasks and 256 interrupt tasks)					
	Scheduled interrupt	1 (interrupt task 2, fixed)					
	Input interrupt tasks	6 (interrupt tasks 140 to 145, fixed)				4 (interrupt tasks 140 to 143, fixed)	2 (interrupt tasks 140 to 141, fixed)
		(High-speed counter interrupts and interrupt tasks specified by external interrupts can also be executed.)					
Maximum subroutine number		256					
Maximum jump number		256					
Scheduled interrupts		1					
Clock function		Supported. Accuracy (monthly deviation): 4.5 min to −0.5 min (ambient temperature: 55°C), −2.0 min to +2.0 min (ambient temperature: 25°C), −2.5 min to +1.5 min (ambient temperature: 0°C)					
Memory Backup	Built-in flash memory	User programs and parameters (such as the PLC Setup) are automatically saved to the flash memory. It is also possible to save and read data memory initial data. The data is automatically transferred to RAM when the power supply is turned ON. (Data memory initial data, however, may or may not be transferred, depending on the selection in the PLC Setup.					
	Battery backup	The HR Area, DM Area, and counter values (flags, PV) are backed up by a battery. Battery model: CJ1W-BAT01 (Built into the CP1L CPU Unit.) Maximum battery service life: 5 years Guaranteed (ambient temperature: 55°C): 13,000 hours (approx. 1.5 years) Effective value (ambient temperature: 25°C): 43,000 hours (approx. 5 years)					
Memory Cassette function		A CP1W-ME05M Memory Cassette (512K words, optional) can be mounted. It can be used to back up the following data on the CPU Unit's RAM and to transfer the data at startup. • Data saved on Memory Cassette: User programs, parameters (such as the PLC Setup), DM Area, data memory initial data, comment memory (CX-Programmer conversion tables, comments, program indices), and FB program memory. • Writing to Memory Cassette: By operations from the CX-Programmer. • Reading from Memory Cassette: At startup, or by operations from the CX-Programmer.					

Note Can be used as Modbus-RTU easy master function.

2-2-2 I/O Memory Details

Type		M CPU Units			L CPU Units		
Model		CP1L-M60DR-A CP1L-M60DR-D CP1L-M60DT-A CP1L-M60DT-D CP1L-M60DT1-D	CP1L-M40DR-A CP1L-M40DR-D CP1L-M40DT-A CP1L-M40DT-D CP1L-M40DT1-D	CP1L-M30DR-A CP1L-M30DR-D CP1L-M30DT-A CP1L-M30DT-D CP1L-M30DT1-D	CP1L-L20DR-A CP1L-L20DR-D CP1L-L20DT-A CP1L-L20DT-D CP1L-L20DT1-D	CP1L-L14DR-A CP1L-L14DR-D CP1L-L14DT-A CP1L-L14DT-D CP1L-L14DT1-D	CP1L-L10DR-A CP1L-L10DR-D CP1L-L10DT-A CP1L-L10DT-D CP1L-L10DT1-D
I/O Areas	Input bits	36 bits CIO 0.00 to CIO 0.11 CIO 1.00 to CIO 1.11 CIO 2.00 to CIO 2.11	24 bits CIO 0.00 to CIO 0.11 CIO 1.00 to CIO 1.11	18 bits CIO 0.00 to CIO 0.11 CIO 1.00 to CIO 1.05	12 bits CIO 0.00 to CIO 0.11	8 bits CIO 0.00 to CIO 0.07	6 bits CIO 0.00 to CIO 0.05
	Output bits	24 bits CIO 100.00 to CIO 100.07 CIO 101.00 to CIO 101.07 CIO 102.00 to CIO 102.07	16 bits CIO 100.00 to CIO 100.07 CIO 101.00 to CIO 101.07	12 bits CIO 100.00 to CIO 100.07 CIO 101.00 to CIO 100.03	8 bits CIO 100.00 to CIO 100.07	6 bits CIO 100.00 to CIO 100.05	4 bits CIO 100.00 to CIO 100.03
	1:1 Link Bit Area	256 bits (16 words): CIO 3000.00 to CIO 3015.15 (words CIO 3000 to CIO 3015)					Not Support
	Serial PLC Link Area	1,440 bits (90 words): CIO 3100.00 to CIO 3189.15 (words CIO 3100 to CIO 3189)					Not Support
	Work bits	4,800 bits (300 words): CIO 1200.00 to CIO 1499.15 (words CIO 1200 to CIO 1499) 6,400 bits (400 words): CIO 1500.00 to CIO 1899.15 (words CIO 1500 to CIO 1899) 15,360 bits (960 words): CIO 2000.00 to CIO 2959.15 (words CIO 2000 to CIO 2959) 9,600 bits (600 words): CIO 3200.00 to CIO 3799.15 (words CIO 3200 to CIO 3799) 37,504 bits (2,344 words): CIO 3800.00 to CIO 6143.15 (words CIO 3800 to CIO 6143)					
Work bits		8,192 bits (512 words): W000.00 to W511.15 (words W0 to W511)					
TR Area		16 bits: TR0 to TR15					
HR Area		8,192 bits (512 words): H0.00 to H511.15 (words H0 to H511)					
AR Area		Read-only (Write-prohibited) 7,168 bits (448 words): A0.00 to A447.15 (words A0 to A447) Read/Write 8,192 bits (512 words): A448.00 to A959.15 (words A448 to A959)					
Timers		4,096 bits: T0 to T4095					
Counters		4,096 bits: C0 to C4095					
DM Area		32 Kwords: D0 to D32767 **Note** Initial data can be transferred to the CPU Unit's built-in flash memory using the data memory initial data transfer function. A setting in the PLC Setup can be used so that the data in flash memory is transferred to RAM at startup. DM fixed allocation words for Modbus-RTU Easy Master D32200 to D32249 for Serial Port 1, D32300 to D32349 for Serial Port 2			10 Kwords: D0 to D9999 and D32000 to D32767 **Note** Initial data can be transferred to the CPU Unit's built-in flash memory using the data memory initial data transfer function. A setting in the PLC Setup can be used so that the data in flash memory is transferred to RAM at startup. DM fixed allocation words for Modbus-RTU Easy Master D32300 to D32349 for Serial Port 1		
Data Register Area		16 registers (16 bits): DR0 to DR15					
Index Register Area		16 registers (16 bits): IR0 to IR15					
Task Flag Area		32 flags (32 bits): TK0 to TK31					
Trace Memory		4,000 words (500 samples for the trace data maximum of 31 bits and 6 words.)					

2-2-3 I/O Specifications

I/O Terminal Blocks of CPU Units with 60 I/O Points

Input Terminal Block (Top Block)

AC Power Supply Models

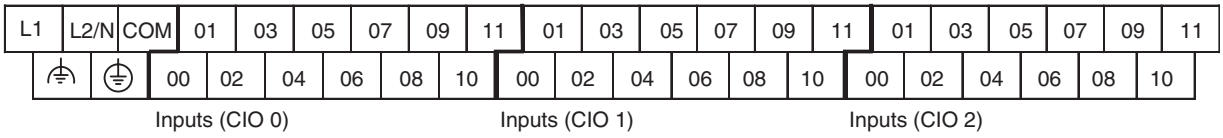

DC Power Supply Models

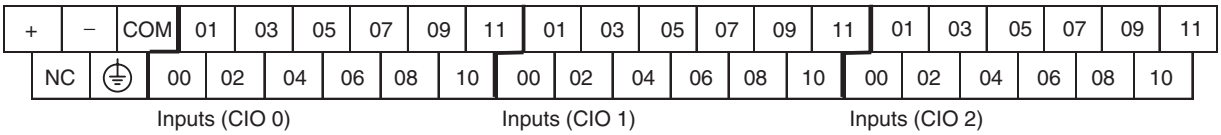

Setting Input Functions Using PLC Setup

Address		Input operation settings			High-speed counters		Origin searches
Word	Bit	Normal inputs	Interrupt inputs (See note.)	Quick-response inputs	Operation settings: High-speed counters enabled Phase-Z reset		Origin searches enabled for pulse outputs 0 and 1
					Single-phase (increment pulse input)	Two-phase (differential phase x4, up/down, or pulse/direction)	
CIO 0	00	Normal input 0	---	---	Counter 0, increment input	Counter 0, A phase, up, or count input	---
	01	Normal input 1	---	---	Counter 1, increment input	Counter 0, B phase, down, or direction input	---
	02	Normal input 2	---	---	Counter 2, increment input	Counter 1, A phase, up, or count input	---
	03	Normal input 3	---	---	Counter 3, increment input	Counter 1, B phase, down, or direction input	---
	04	Normal input 4	Interrupt input 0	Quick-response input 0	Counter 0, phase-Z/reset input	Counter 0, phase-Z reset input	---
	05	Normal input 5	Interrupt input 1	Quick-response input 1	Counter 1, phase-Z reset input	Counter 1, phase-Z reset input	---
	06	Normal input 6	Interrupt input 2	Quick-response input 2	Counter 2, phase-Z reset input	---	Pulse output 0: Origin input signal
	07	Normal input 7	Interrupt input 3	Quick-response input 3	Counter 3, phase-Z reset input	---	Pulse output 1: Origin input signal
	08	Normal input 8	Interrupt input 4	Quick-response input 4	---	---	---
	09	Normal input 9	Interrupt input 5	Quick-response input 5	---	---	---
	10	Normal input 10	---	---	---	---	Pulse output 0: Origin proximity input signal
	11	Normal input 11	---	---	---	---	Pulse output 1: Origin proximity input signal

Address		Input operation settings			High-speed counters		Origin searches
Word	Bit	Normal inputs	Interrupt inputs (See note.)	Quick-response inputs	Operation settings: High-speed counters enabled Phase-Z reset		Origin searches enabled for pulse outputs 0 and 1
					Single-phase (increment pulse input)	Two-phase (differential phase x4, up/down, or pulse/direction)	
CIO 1	00	Normal input 12	---	---	---	---	---
	01	Normal input 13	---	---	---	---	---
	02	Normal input 14	---	---	---	---	---
	03	Normal input 15	---	---	---	---	---
	04	Normal input 16	---	---	---	---	---
	05	Normal input 17	---	---	---	---	---
	06	Normal input 18	---	---	---	---	---
	07	Normal input 19	---	---	---	---	---
	08	Normal input 20	---	---	---	---	---
	09	Normal input 21	---	---	---	---	---
	10	Normal input 22	---	---	---	---	---
	11	Normal input 23	---	---	---	---	---
CIO 2	00	Normal input 24	---	---	---	---	---
	01	Normal input 25	---	---	---	---	---
	02	Normal input 26	---	---	---	---	---
	03	Normal input 27	---	---	---	---	---
	04	Normal input 28	---	---	---	---	---
	05	Normal input 29	---	---	---	---	---
	06	Normal input 30	---	---	---	---	---
	07	Normal input 31	---	---	---	---	---
	08	Normal input 32	---	---	---	---	---
	09	Normal input 33	---	---	---	---	---
	10	Normal input 34	---	---	---	---	---
	11	Normal input 35	---	---	---	---	---

Output Terminal Block (Bottom Block)

AC Power Supply Models

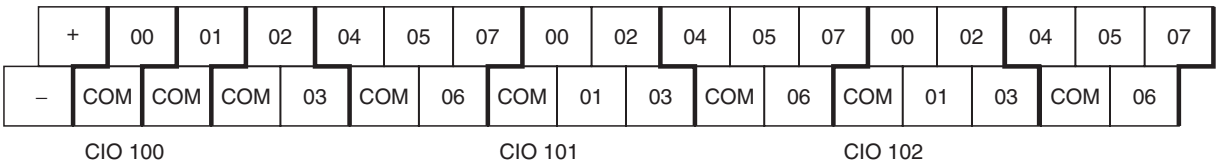

DC Power Supply Models

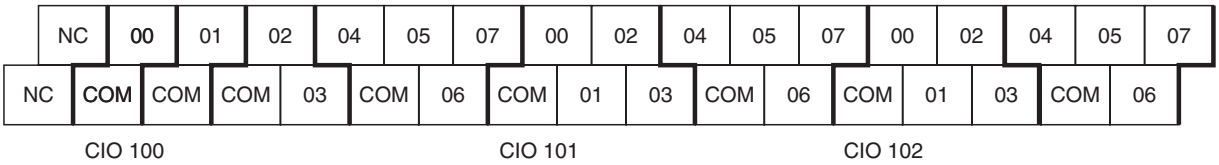

Setting Output Functions Using Instructions and PLC Setup

Address		When the instructions to the right are not executed	When a pulse output instruction (SPED, ACC, PLS2, or ORG) is executed		When origin searches are enabled in the PLC Setup, and an origin search is executed with ORG instruction	When the PWM instruction is executed
Word	Bit	Normal outputs	Fixed duty ratio pulse output			Variable duty ratio pulse output
			CW/CCW	Pulse plus direction	+ When the origin search function is used	PWM output
CIO 100	00	Normal output 0	Pulse output 0 (CW)	Pulse output 0 (pulse)	---	---
	01	Normal output 1	Pulse output 0 (CCW)	Pulse output 0 (direction)	---	PWM output 0
	02	Normal output 2	Pulse output 1 (CW)	Pulse output 1 (pulse)	---	---
	03	Normal output 3	Pulse output 1 (CCW)	Pulse output 1 (direction)	---	PWM output 1
	04	Normal output 4	---	---	Origin search 0 (Error counter reset output)	---
	05	Normal output 5	---	---	Origin search 1 (Error counter reset output)	---
	06	Normal output 6	---	---	---	---
	07	Normal output 7	---	---	---	---
CIO 101	00	Normal output 8	---	---	---	---
	01	Normal output 9	---	---	---	---
	02	Normal output 10	---	---	---	---
	03	Normal output 11	---	---	---	---
	04	Normal output 12	---	---	---	---
	05	Normal output 13	---	---	---	---
	06	Normal output 14	---	---	---	---
	07	Normal output 15	---	---	---	---

Address		When the instructions to the right are not executed	When a pulse output instruction (SPED, ACC, PLS2, or ORG) is executed		When origin searches are enabled in the PLC Setup, and an origin search is executed with ORG instruction	When the PWM instruction is executed
Word	Bit	Normal outputs	Fixed duty ratio pulse output			Variable duty ratio pulse output
			CW/CCW	Pulse plus direction	+ When the origin search function is used	PWM output
CIO 102	00	Normal output 16	---	---	---	---
	01	Normal output 17	---	---	---	---
	02	Normal output 18	---	---	---	---
	03	Normal output 19	---	---	---	---
	04	Normal output 20	---	---	---	---
	05	Normal output 21	---	---	---	---
	06	Normal output 22	---	---	---	---
	07	Normal output 23	---	---	---	---

I/O Terminal Blocks of CPU Units with 40 I/O Points

Input Terminal Block (Top Block)

AC Power Supply Models

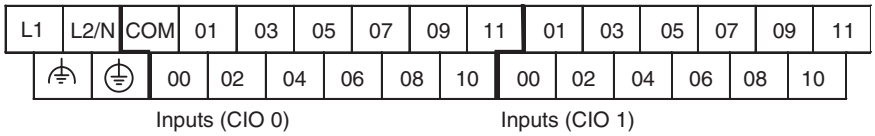

DC Power Supply Models

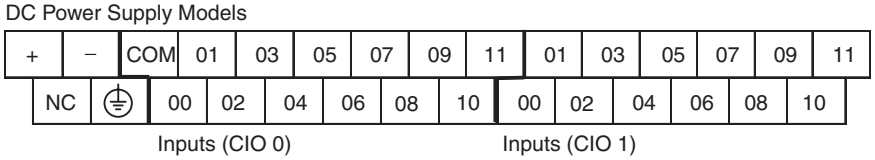

Setting Input Functions Using PLC Setup

Address		Input operation settings			High-speed counters		Origin searches
Word	Bit	Normal inputs	Interrupt inputs (See note.)	Quick-response inputs	Operation settings: High-speed counters enabled Phase-Z reset		Origin searches enabled for pulse outputs 0 and 1
					Single-phase (increment pulse input)	Two-phase (differential phase x4, up/down, or pulse/direction)	
CIO 0	00	Normal input 0	---	---	Counter 0, increment input	Counter 0, A phase, up, or count input	---
	01	Normal input 1	---	---	Counter 1, increment input	Counter 0, B phase, down, or direction input	---
	02	Normal input 2	---	---	Counter 2, increment input	Counter 1, A phase, up, or count input	---
	03	Normal input 3	---	---	Counter 3, increment input	Counter 1, B phase, down, or direction input	---
	04	Normal input 4	Interrupt input 0	Quick-response input 0	Counter 0, phase-Z/reset input	Counter 0, phase-Z reset input	---
	05	Normal input 5	Interrupt input 1	Quick-response input 1	Counter 1, phase-Z reset input	Counter 1, phase-Z reset input	---
	06	Normal input 6	Interrupt input 2	Quick-response input 2	Counter 2, phase-Z reset input	---	Pulse output 0: Origin input signal
	07	Normal input 7	Interrupt input 3	Quick-response input 3	Counter 3, phase-Z reset input	---	Pulse output 1: Origin input signal
	08	Normal input 8	Interrupt input 4	Quick-response input 4	---	---	---
	09	Normal input 9	Interrupt input 5	Quick-response input 5	---	---	---
	10	Normal input 10	---	---	---	---	Pulse output 0: Origin proximity input signal
	11	Normal input 11	---	---	---	---	Pulse output 1: Origin proximity input signal

Address		Input operation settings			High-speed counters		Origin searches
Word	Bit	Normal inputs	Interrupt inputs (See note.)	Quick-response inputs	Operation settings: High-speed counters enabled Phase-Z reset		Origin searches enabled for pulse outputs 0 and 1
					Single-phase (increment pulse input)	Two-phase (differential phase x4, up/down, or pulse/direction)	
CIO 1	00	Normal input 12	---	---	---	---	---
	01	Normal input 13	---	---	---	---	---
	02	Normal input 14	---	---	---	---	---
	03	Normal input 15	---	---	---	---	---
	04	Normal input 16	---	---	---	---	---
	05	Normal input 17	---	---	---	---	---
	06	Normal input 18	---	---	---	---	---
	07	Normal input 19	---	---	---	---	---
	08	Normal input 20	---	---	---	---	---
	09	Normal input 21	---	---	---	---	---
	10	Normal input 22	---	---	---	---	---
	11	Normal input 23	---	---	---	---	---

Output Terminal Block Arrangement (Bottom Block)

AC Power Supply Models

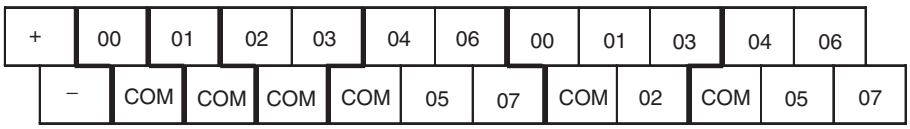

DC Power Supply Models

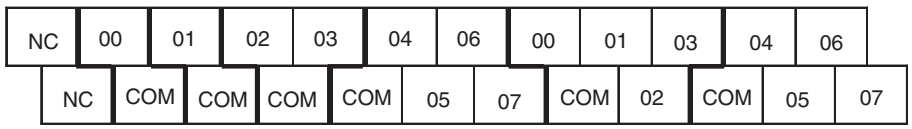

Setting Output Functions Using Instructions and PLC Setup

Address		When the instructions to the right are not executed	When a pulse output instruction (SPED, ACC, PLS2, or ORG) is executed		When origin searches are enabled in the PLC Setup, and an origin search is executed with ORG instruction	When the PWM instruction is executed
Word	Bit	Normal outputs	Fixed duty ratio pulse output			Variable duty ratio pulse output
			CW/CCW	Pulse plus direction	+ When the origin search function is used	PWM output
CIO 100	00	Normal output 0	Pulse output 0 (CW)	Pulse output 0 (pulse)	---	---
	01	Normal output 1	Pulse output 0 (CCW)	Pulse output 0 (direction)	---	PWM output 0
	02	Normal output 2	Pulse output 1 (CW)	Pulse output 1 (pulse)	---	---
	03	Normal output 3	Pulse output 1 (CCW)	Pulse output 1 (direction)	---	PWM output 1
	04	Normal output 4	---	---	Origin search 0 (Error counter reset output)	---
	05	Normal output 5	---	---	Origin search 1 (Error counter reset output)	---
	06	Normal output 6	---	---	---	---
	07	Normal output 7	---	---	---	---
CIO 101	00	Normal output 8	---	---	---	---
	01	Normal output 9	---	---	---	---
	02	Normal output 10	---	---	---	---
	03	Normal output 11	---	---	---	---
	04	Normal output 12	---	---	---	---
	05	Normal output 13	---	---	---	---
	06	Normal output 14	---	---	---	---
	07	Normal output 15	---	---	---	---

I/O Terminal Blocks of CPU Units with 30 I/O Points

Input Terminal Block (Top Block)

AC Power Supply Models

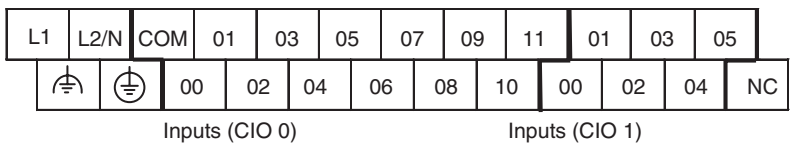

DC Power Supply Models

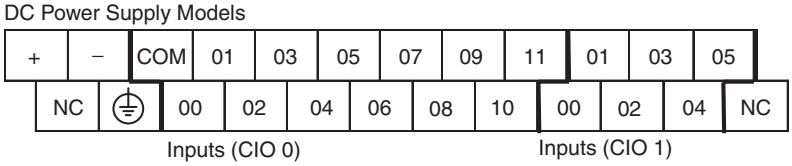

Setting Input Functions Using PLC Setup

Address		Input operation settings			High-speed counters		Origin searches
Word	Bit	Normal inputs	Interrupt inputs (See note.)	Quick-response inputs	Operation settings: High-speed counters enabled Phase-Z reset		Origin searches enabled for pulse outputs 0 and 1
					Single-phase (increment pulse input)	Two-phase (differential phase x4, up/down, or pulse/direction)	
CIO 0	00	Normal input 0	---	---	Counter 0, increment input	Counter 0, A phase, up, or count input	---
	01	Normal input 1	---	---	Counter 1, increment input	Counter 0, B phase, down, or direction input	---
	02	Normal input 2	---	---	Counter 2, increment input	Counter 1, A phase, up, or count input	---
	03	Normal input 3	---	---	Counter 3, increment input	Counter 1, B phase, down, or direction input	---
	04	Normal input 4	Interrupt input 0	Quick-response input 0	Counter 0, phase-Z/reset input	Counter 0, phase-Z reset input	---
	05	Normal input 5	Interrupt input 1	Quick-response input 1	Counter 1, phase-Z reset input	Counter 1, phase-Z reset input	---
	06	Normal input 6	Interrupt input 2	Quick-response input 2	Counter 2, phase-Z reset input	---	Pulse output 0: Origin input signal
	07	Normal input 7	Interrupt input 3	Quick-response input 3	Counter 3, phase-Z reset input	---	Pulse output 1: Origin input signal
	08	Normal input 8	Interrupt input 4	Quick-response input 4	---		---
	09	Normal input 9	Interrupt input 5	Quick-response input 5	---		---
	10	Normal input 10	---	---	---		Pulse output 0: Origin proximity input signal
	11	Normal input 11	---	---	---		Pulse output 1: Origin proximity input signal
CIO 1	00	Normal input 12	---	---	---		
	01	Normal input 13	---	---	---		
	02	Normal input 14	---	---	---		
	03	Normal input 15	---	---	---		
	04	Normal input 16	---	---	---		
	05	Normal input 17	---	---	---		

Output Terminal Block (Bottom Block)

AC Power Supply Models

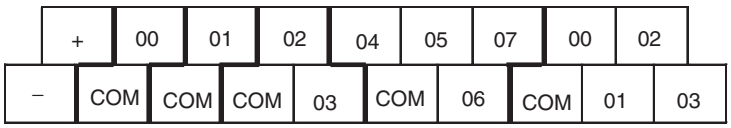

DC Power Supply Models

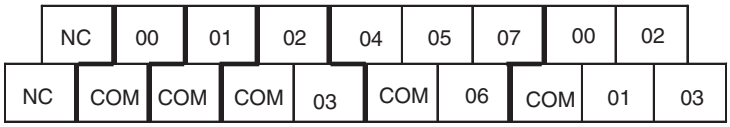

Setting Output Functions Using Instructions and PLC Setup

Address		When the instructions to the right are not executed	When a pulse output instruction (SPED, ACC, PLS2, or ORG) is executed		When origin searches are enabled in the PLC Setup, and an origin search is executed with ORG instruction	When the PWM instruction is executed
Word	Bit	Normal outputs	Fixed duty ratio pulse output			Variable duty ratio pulse output
			CW/CCW	Pulse plus direction	+ When the origin search function is used	PWM output
CIO 100	00	Normal output 0	Pulse output 0 (CW)	Pulse output 0 (pulse)	---	---
	01	Normal output 1	Pulse output 0 (CCW)	Pulse output 0 (direction)	---	PWM output 0
	02	Normal output 2	Pulse output 1 (CW)	Pulse output 1 (pulse)	---	---
	03	Normal output 3	Pulse output 1 (CCW)	Pulse output 1 (direction)	---	PWM output 1
	04	Normal output 4	---	---	Origin search 0 (Error counter reset output)	---
	05	Normal output 5	---	---	Origin search 1 (Error counter reset output)	---
	06	Normal output 6	---	---	---	---
	07	Normal output 7	---	---	---	---
CIO 101	00	Normal output 8	---	---	---	---
	01	Normal output 9	---	---	---	---
	02	Normal output 10	---	---	---	---
	03	Normal output 11	---	---	---	---

I/O Terminal Blocks of CPU Units with 20 I/O Points

Input Terminal Block (Top Block)

AC Power Supply Models

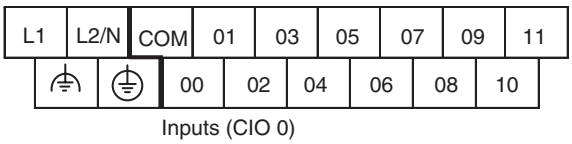

DC Power Supply Models

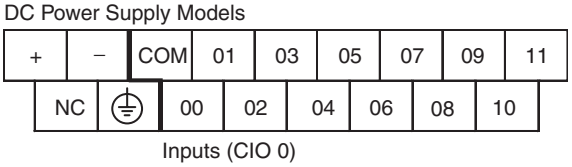

Setting Input Functions Using PLC Setup

Address		Input operation settings			High-speed counters		Origin searches
Word	Bit	Normal inputs	Interrupt inputs (See note.)	Quick-response inputs	Operation settings: High-speed counters enabled Phase-Z reset		Origin searches enabled for pulse outputs 0 and 1
					Single-phase (increment pulse input)	Two-phase (differential phase x4, up/down, or pulse/direction)	
CIO 0	00	Normal input 0	---	---	Counter 0, increment input	Counter 0, A phase, up, or count input	---
	01	Normal input 1	---	---	Counter 1, increment input	Counter 0, B phase, down, or direction input	---
	02	Normal input 2	---	---	Counter 2, increment input	Counter 1, A phase, up, or count input	---
	03	Normal input 3	---	---	Counter 3, increment input	Counter 1, B phase, down, or direction input	---
	04	Normal input 4	Interrupt input 0	Quick-response input 0	Counter 0, phase-Z/reset input	Counter 0, phase-Z reset input	---
	05	Normal input 5	Interrupt input 1	Quick-response input 1	Counter 1, phase-Z reset input	Counter 1, phase-Z reset input	---
	06	Normal input 6	Interrupt input 2	Quick-response input 2	Counter 2, phase-Z reset input	---	Pulse output 0: Origin input signal
	07	Normal input 7	Interrupt input 3	Quick-response input 3	Counter 3, phase-Z reset input	---	Pulse output 1: Origin input signal
	08	Normal input 8	Interrupt input 4	Quick-response input 4	---		---
	09	Normal input 9	Interrupt input 5	Quick-response input 5	---		---
	10	Normal input 10	---	---	---		Pulse output 0: Origin proximity input signal
	11	Normal input 11	---	---	---		Pulse output 1: Origin proximity input signal

Output Terminal Block (Bottom Block)

AC Power Supply Models

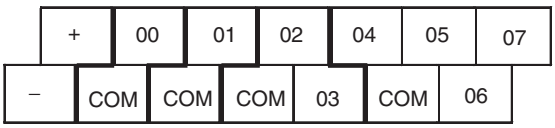

DC Power Supply Models

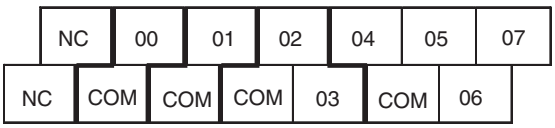

Setting Output Functions Using Instructions and PLC Setup

Address		When the instructions to the right are not executed	When a pulse output instruction (SPED, ACC, PLS2, or ORG) is executed		When origin searches are enabled in PLC Setup, and an origin search is executed with ORG instruction	When the PWM instruction is executed
Word	Bit	Normal outputs	Fixed duty ratio pulse output			Variable duty ratio pulse output
			CW/CCW	Pulse plus direction	+ When the origin search function is used	PWM output
CIO 100	00	Normal output 0	Pulse output 0 (CW)	Pulse output 0 (pulse)	---	---
	01	Normal output 1	Pulse output 0 (CCW)	Pulse output 0 (direction)	---	PWM output 0
	02	Normal output 2	Pulse output 1 (CW)	Pulse output 1 (pulse)	---	---
	03	Normal output 3	Pulse output 1 (CCW)	Pulse output 1 (direction)	---	PWM output 1
	04	Normal output 4	---	---	Origin search 0 (Error counter reset output)	---
	05	Normal output 5	---	---	Origin search 1 (Error counter reset output)	---
	06	Normal output 6	---	---	---	---
	07	Normal output 7	---	---	---	---

I/O Terminal Blocks of CPU Units with 14 I/O Points

Input Terminal Block (Top Block)

AC Power Supply Models

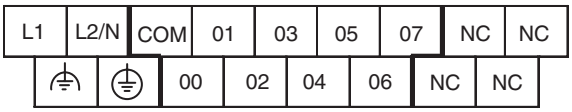

Inputs (CIO 0)

DC Power Supply Models

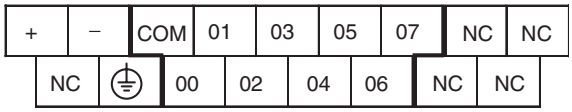

Inputs (CIO 0)

Setting Input Functions Using PLC Setup

Address		Input operation settings			High-speed counters		Origin searches
Word	Bit	Normal inputs	Interrupt inputs (See note.)	Quick-response inputs	Operation settings: High-speed counters enabled Phase-Z reset		Origin searches enabled for pulse outputs 0 and 1
					Single-phase (increment pulse input)	Two-phase (differential phase x4, up/down, or pulse/direction)	
CIO 0	00	Normal input 0	---	---	Counter 0, increment input	Counter 0, A phase, up, or count input	---
	01	Normal input 1	---	---	Counter 1, increment input	Counter 0, B phase, down, or direction input	---
	02	Normal input 2	---	---	Counter 2, increment input	Counter 1, A phase, up, or count input	Pulse output 0: Origin proximity input signal
	03	Normal input 3	---	---	Counter 3, increment input	Counter 1, B phase, down, or direction input	Pulse output 1: Origin proximity input signal
	04	Normal input 4	Interrupt input 0	Quick-response input 0	Counter 0, phase-Z/reset input	Counter 0, phase-Z or reset input	---
	05	Normal input 5	Interrupt input 1	Quick-response input 1	Counter 1, phase-Z reset input	Counter 1, phase-Z or reset input	---
	06	Normal input 6	Interrupt input 2	Quick-response input 2	Counter 2, phase-Z reset input	---	Pulse output 0: Origin input signal
	07	Normal input 7	Interrupt input 3	Quick-response input 3	Counter 3, phase-Z reset input	---	Pulse output 1: Origin input signal

Output Terminal Block (Bottom Block)

AC Power Supply Models

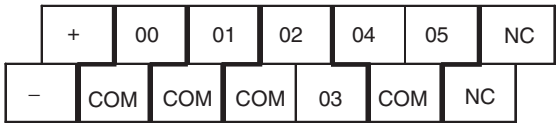

CIO 100

DC Power Supply Models

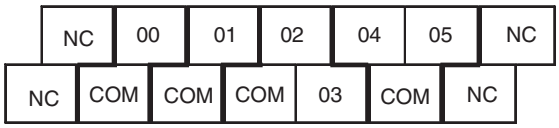

CIO 100

Setting Functions Using Instructions and PLC Setup

Address		When the instructions to the right are not executed	When a pulse output instruction (SPED, ACC, PLS2, or ORG) is executed		When origin searches are enabled in PLC Setup, and an origin search is executed with ORG instruction	When the PWM instruction is executed
Word	Bit	Normal outputs	Fixed duty ratio pulse output			Variable duty ratio pulse output
			CW/CCW	Pulse plus direction	+ When the origin search function is used	PWM output
CIO 100	00	Normal output 0	Pulse output 0 (CW)	Pulse output 0 (pulse)	---	---
	01	Normal output 1	Pulse output 0 (CCW)	Pulse output 0 (direction)	---	PWM output 0
	02	Normal output 2	Pulse output 1 (CW)	Pulse output 1 (pulse)	---	---
	03	Normal output 3	Pulse output 1 (CCW)	Pulse output 1 (direction)	---	PWM output 1
	04	Normal output 4	---	---	Origin search 0 (Error counter reset output)	---
	05	Normal output 5	---	---	Origin search 1 (Error counter reset output)	---

I/O Terminal Blocks of CPU Units with 10 I/O Points

Input Terminal Block (Top Block)

AC Power Supply Models

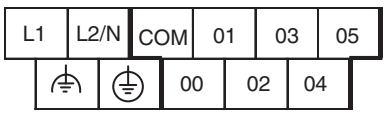

Inputs (CIO 0)

DC Power Supply Models

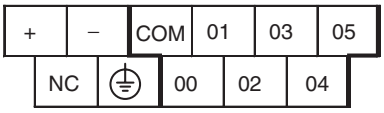

Inputs (CIO 0)

Setting Input Functions Using PLC Setup

Address		Input operation settings			High-speed counters		Origin searches
Word	Bit	Normal inputs	Interrupt inputs (See note.)	Quick-response inputs	Operation settings: High-speed counters enabled Phase-Z reset		Origin searches enabled for pulse outputs 0
					Single-phase (increment pulse input)	Two-phase (differential phase x4, up/down, or pulse/direction)	
CIO 0	00	Normal input 0	---	---	Counter 0, increment input	Counter 0, A phase, up, or count input	---
	01	Normal input 1	---	---	Counter 1, increment input	Counter 0, B phase, down, or direction input	---
	02	Normal input 2	---	---	Counter 2, increment input	Counter 1, A phase, up, or count input	---
	03	Normal input 3	---	---	Counter 3, increment input	Counter 1, B phase, down, or direction input	Pulse output 0: Origin proximity input signal
	04	Normal input 4	Interrupt input 0	Quick-response input 0	Counter 0, phase-Z/reset input	Counter 0, phase-Z or reset input	---
	05	Normal input 5	Interrupt input 1	Quick-response input 1	Counter 1, phase-Z reset input	Counter 1, phase-Z or reset input	Pulse output 0: Origin input signal

I/O Terminal Blocks of CPU Units with 10 I/O Points

Output Terminal Block (Bottom Block)

Setting Functions Using Instructions and PLC Setup

Address		When the instructions to the right are not executed	When a pulse output instruction (SPED, ACC, PLS2, or ORG) is executed		When origin searches are enabled in PLC Setup, and an origin search is executed with ORG instruction	When the PWM instruction is executed
Word	Bit	Normal outputs	Fixed duty ratio pulse output			Variable duty ratio pulse output
			CW/CCW	Pulse plus direction	+ When the origin search function is used	PWM output
CIO 100	00	Normal output 0	Pulse output 0 (CW)	Pulse output 0 (pulse)	---	---
	01	Normal output 1	Pulse output 0 (CCW)	Pulse output 0 (direction)	---	PWM output 0
	02	Normal output 2	Pulse output 1 (CW)	Pulse output 1 (pulse)	---	---
	03	Normal output 3	Pulse output 1 (CCW)	Pulse output 1 (direction)	Origin search 0 (Error counter reset output)	PWM output 1

Input Specifications

Normal Inputs

Item	Specification		
	High-speed Counter Inputs	Interrupt Inputs and Quick-response Inputs	Normal inputs
	CIO 0.00 to CIO 0.03	CIO 0.04 to CIO 0.09 (See note 1.)	CIO 0.10 to CIO 0.11 and CIO 1.00 to 1.11 (See note 2.)
Input voltage	24 VDC $^{+10\%}/_{-15\%}$		
Applicable inputs	2-wire and 3-wire sensors		
Input impedance	3.0 kΩ	3.0 kΩ	4.7 kΩ
Input current	7.5 mA typical	7.5 mA typical	5 mA typical
ON voltage	17.0 VDC min.	17.0 VDC min.	14.4 VDC min.
OFF voltage/current	1 mA max. at 5.0 VDC max.	1 mA max. at 5.0 VDC max.	1 mA max. at 5.0 VDC max.
ON delay	2.5 μs max.	50 μs max.	1 ms max. (See note 3.)

Item	Specification		
	High-speed Counter Inputs	**Interrupt Inputs and Quick-response Inputs**	**Normal inputs**
	CIO 0.00 to CIO 0.03	**CIO 0.04 to CIO 0.09 (See note 1.)**	**CIO 0.10 to CIO 0.11 and CIO 1.00 to 1.11 (See note 2.)**
OFF delay	2.5 μs max.	50 μs max.	1 ms max. (See note 3.)
Circuit configuration	Input bits: CIO 0.04 to CIO 0.11 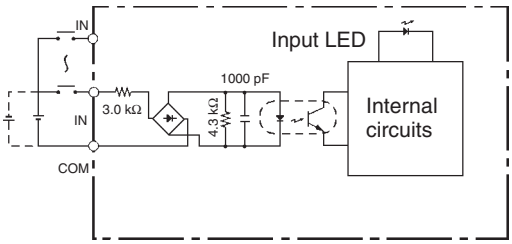 Input bits: CIO 0.00 to CIO 0.03, CIO 1.00 to CIO 1.03 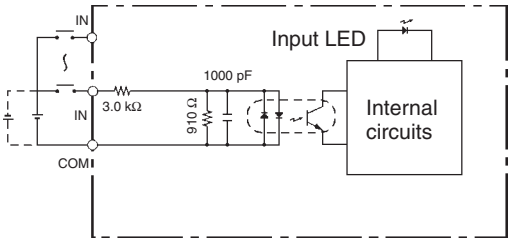 Input bits: CIO 1.04 to CIO 1.11 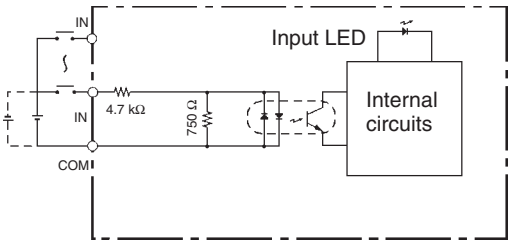 		

Note

(1) HIgh-speed counter inputs, interrupt inputs, and quick-response inputs can also be used as normal inputs.

(2) The bits that can be used depend on the model of CPU Unit.

(3) The response time is the hardware delay value. The delay set in the PLC Setup (0 to 32 ms, default: 8 ms) must be added to this value.

High-speed Counter Inputs

Bit	Differential phase mode	Pulse plus direction input mode	Up/down input mode	Increment mode
CIO 0.00, CIO 0.02	A-phase pulse input	Pulse input	Increment pulse input	Increment pulse input
CIO 0.01, CIO 0.03	B-phase pulse input	Direction input	Decrement pulse input	Normal input
CIO 0.04, CIO 0.05	Z-phase pulse input or hardware reset input (Can be used as ordinary inputs when high-speed counter is not being used.)			
Max. count frequency	50 kHz (4×)	100 kHz		

Input Bits for High-speed Counters

Counter	Single phase	Phase A	Phase B	Phase Z
High-speed counter 0	CIO 0.00	CIO 0.00	CIO 0.01	CIO 0.04
High-speed counter 1	CIO 0.01	CIO 0.02	CIO 0.03	CIO 0.05
High-speed counter 2	CIO 0.02	---	---	---
High-speed counter 3	CIO 0.03	---	---	---

Pulse plus direction input mode,
Increment mode
Up/down input mode

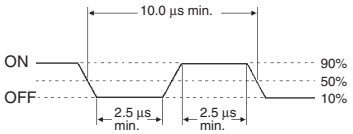

Differential phase mode

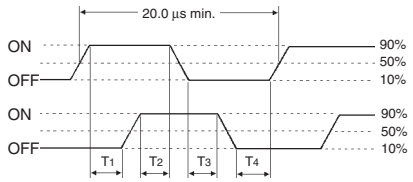

T1, T2, T3, T4: 2.5 μs min.

Input bits: CIO 0.04 to CIO 0.09

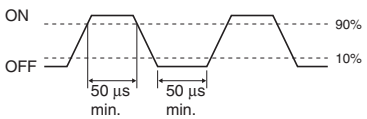

Interrupt Inputs and Quick-response Inputs

With CPU Units with 20, 30, 40 or 60 I/O points, the six input bits from CIO 0.04 to CIO 0.09 can be used as either normal inputs or as interrupt or quick-response inputs depending on the settings in the PLC Setup. With CPU Units with 14 I/O points, the four input bits from CIO 0.04 to CIO 0.07 can be used as either normal inputs or as interrupt or quick-response inputs. With CPU Units with 10 I/O points, the two input bits from CIO 0.04 to CIO 0.05 can be used as either normal inputs or as interrupt or quick-response inputs.

Input bit			Interrupt inputs	Quick-response inputs
CPU Units with 20, 30, 40 or 60 I/O points	CPU Units with 14 I/O points	CPU Units with 10 I/O points		
CIO 0.04	CIO 0.04	CIO 0.04	Interrupt input 0	Quick-response input 0
CIO 0.05	CIO 0.05	CIO 0.05	Interrupt input 1	Quick-response input 1
CIO 0.06	CIO 0.06	---	Interrupt input 2	Quick-response input 2
CIO 0.07	CIO 0.07	---	Interrupt input 3	Quick-response input 3
CIO 0.08	---	---	Interrupt input 4	Quick-response input 4
CIO 0.09	---	---	Interrupt input 5	Quick-response input 5

Output Specifications

Relay Outputs

Item			Specification
Max. switching capacity			2 A, 250 VAC (cosϕ = 1) 2 A, 24 VDC (4 A/common)
Min. switching capacity			10 mA, 5 VDC
Service life of relay	Electrical	Resistive load	100,000 operations (24 VDC)
		Inductive load	48,000 operations (250 VAC, cosϕ = 0.4)
	Mechanical		20,000,000 operations
ON delay			15 ms max.

Item	Specification
OFF delay	15 ms max.
Circuit configuration	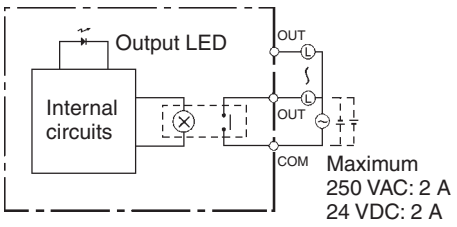

Note (1) Under the worst conditions, the service life of output contacts is as shown above. The service life of relays is as shown in the following diagram as a guideline.

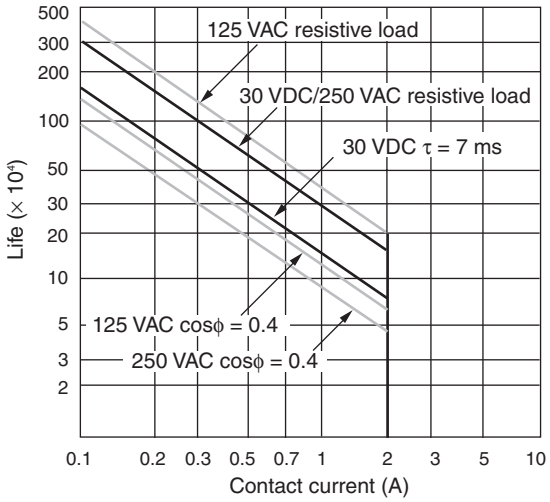

(2) There are restrictions imposed by the ambient temperature.

CPU Units with Relay Outputs (CP1L-□□□DR-D)

Relay Output Load Current Derating Curves for CPU Units and Expansion I/O Units

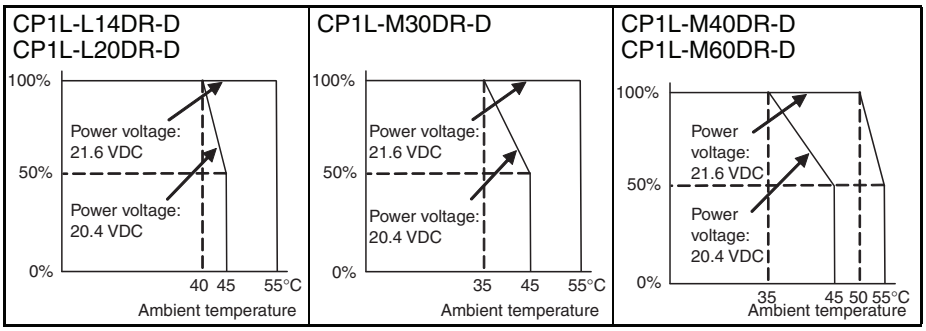

Note The above restrictions, apply to the relay output load current from the CPU Unit even if Expansion I/O Units are not connected.

Transistor Outputs (Sinking or Sourcing)

Normal Outputs

Item	Specification	
	CIO 100.00 to CIO 100.03	CIO 100.04 to CIO 100.07 (See note 3.)
Max. switching capacity	4.5 to 30 VDC, 300 mA/output, 0.9 A/common,	M60D□-D 5.4 A/Unit M40D□-D 3.6 A/Unit M30D□-D 2.7 A/Unit L20D□-D 1.8 A/Unit L14D□-D 1.5 A/Unit (See note 2.) L10D□-D 0.9 A/Unit (See note 2.)
Min. switching capacity	4.5 to 30 VDC, 1 mA	
Leakage current	0.1 mA max.	
Residual voltage	0.6 V max.	1.5 V max.
ON delay	0.1 ms max.	
OFF delay	0.1 ms max.	1 ms max.
Fuse	1 fuse/output (See note 1.)	
Circuit configuration	• Normal outputs CIO 100.00 to CIO 100.03 (Sinking Outputs) 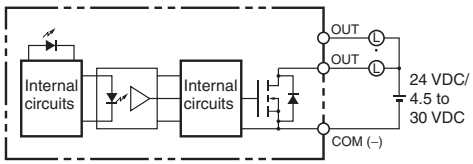 • Normal outputs CIO 100.00 to CIO 100.03 (Sourcing Outputs) 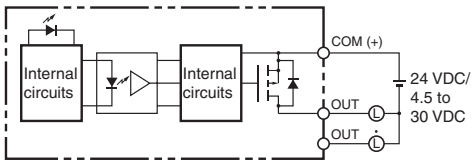	• Normal outputs CIO 100.04 to CIO 101.07 (Sinking Outputs) 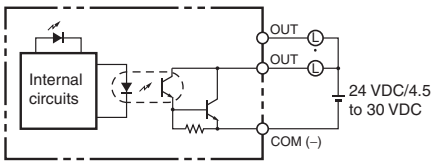 • Normal outputs CIO 100.04 to CIO 101.07 (Sourcing Outputs) 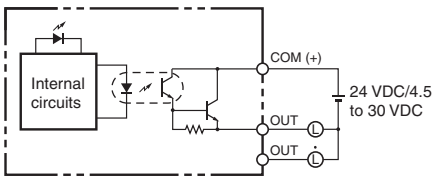	

Note (1) The fuse cannot be replaced by the user.

(2) Also do not exceed 0.9 A for the total of CIO 100.00 to CIO 100.03, which are different common.

(3) The bits that can be used depend on the model of the CPU Unit.

⚠ **Caution** Do not connect a load to an output terminal or apply a voltage in excess of the maximum switching capacity.

Pulse Outputs (CIO 100.00 to CIO 100.03)

Item	Specification
Max. switching capacity	30 mA/4.75 to 26.4 VDC
Min. switching capacity	7 mA/4.75 to 26.4 VDC
Max. output frequency	100 kHz
Output waveform	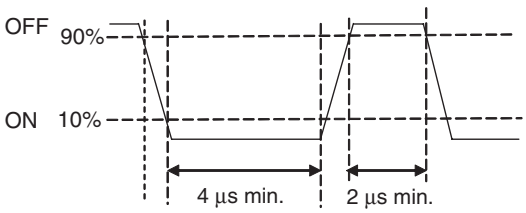 The OFF and ON refer to the output transistor. The output transistor is ON at level “L”.

Note
(1) The load for the above values is assumed to be the resistance load, and does not take into account the impedance for the connecting cable to the load.
(2) Due to distortions in pulse waveforms resulting from connecting cable impedance, the pulse widths in actual operation may be smaller than the values shown above.

PWM Outputs (CIO 100.01 and CIO 100.03)

Item	Specification
Max. switching capacity	30 mA/4.75 to 26.4 VDC
Max. output frequency	1 kHz
PWM output accuracy	For ON duty +1%, −0%:10 kHz output For ON duty +5%, −0%: 0 to 32.8 kHz output
Output waveform	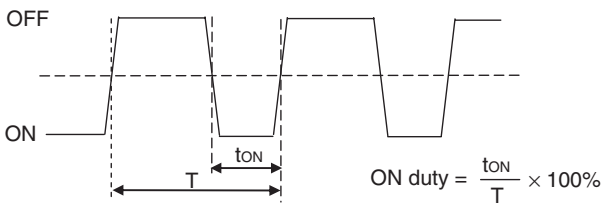 The OFF and ON refer to the output transistor. The output transistor is ON at level “L”.

2-2-4 CP/CPM1A-series Expansion I/O Unit I/O Specifications

Input Specifications (CP1W-40EDR/40EDT/40EDT1/20EDR1/20EDT/20EDT1/8ED and CPM1A-40EDR/40EDT/20EDR1/20EDT/20EDT1/8ED)

Item	Specification
Input voltage	24 VDC $^{+10\%}/_{-15\%}$
Input impedance	4.7 kΩ
Input current	5 mA typical
ON voltage	14.4 VDC min.
OFF voltage	5.0 VDC max.
ON delay	1 ms max. (See note 1.)
OFF delay	1 ms max. (See note 1.)
Circuit configuration	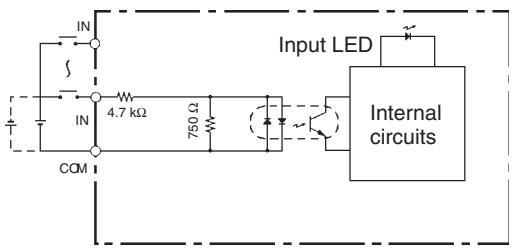

Note
(1) The response time is the hardware delay value. The delay set in the PLC Setup (0 to 32 ms, default: 8 ms) must be added to this value. For the CP1W-40EDR/EDT/EDT1 and CPM1A-40EDR/EDT/EDT1, a fixed value of 16 ms must be added.
(2) Do not apply voltage in excess of the rated voltage to the input terminal.

Output Specifications

Relay Outputs (CP1W-40EDR/32ER/20EDR1/16ER/8ER and CPM1A-40EDR/20EDR1/16ER/8ER)

Item			Specification
Max. switching capacity			2 A, 250 VAC (cosϕ = 1), 2 A, 24 VDC (4 A/common)
Min. switching capacity			5 VDC, 10 mA
Service life of relay (See note.)	Electrical	Resistive load	150,000 operations (24 VDC)
		Inductive load	100,000 operations (240 VAC, cosϕ = 0.4)
	Mechanical		20,000,000 operations
ON delay			15 ms max.
OFF delay			15 ms max.
Circuit configuration			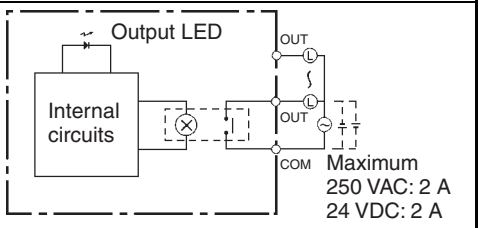

Note (1) Under the worst conditions, the service life of output contacts is as shown above. The service life of relays is as shown in the following diagram as a guideline.

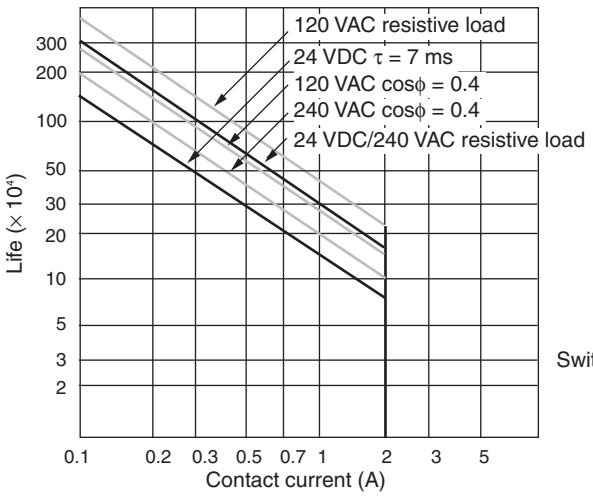

Switching rate: 1,800 operations/hour

(2) With the CPM1A-16ER/CP1W-32ER/CP1W-16ER, the load current is restricted depending on the ambient temperature. Design the system considering the load current based on the following graph.

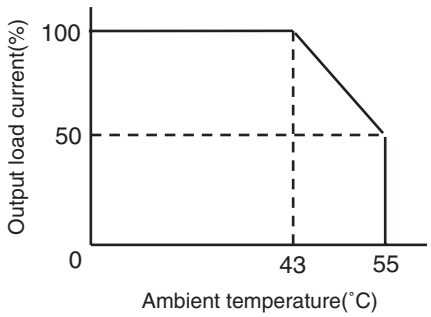

(3) CP1W-32ER's maximum number of simultaneously ON output points is 24 (75%). Design the system considering the simultaneously ON points and load current based on the following curve.

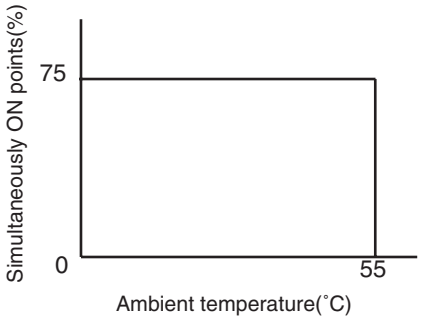

(4) There are restrictions imposed by the ambient temperature.

Relay Output Load Current Derating Curves for Expansion I/O Units (CP1W-8ER/16ER/20EDR1/32ER/40EDR and CPM1A-8ER/16ER/20EDR1/40EDR)

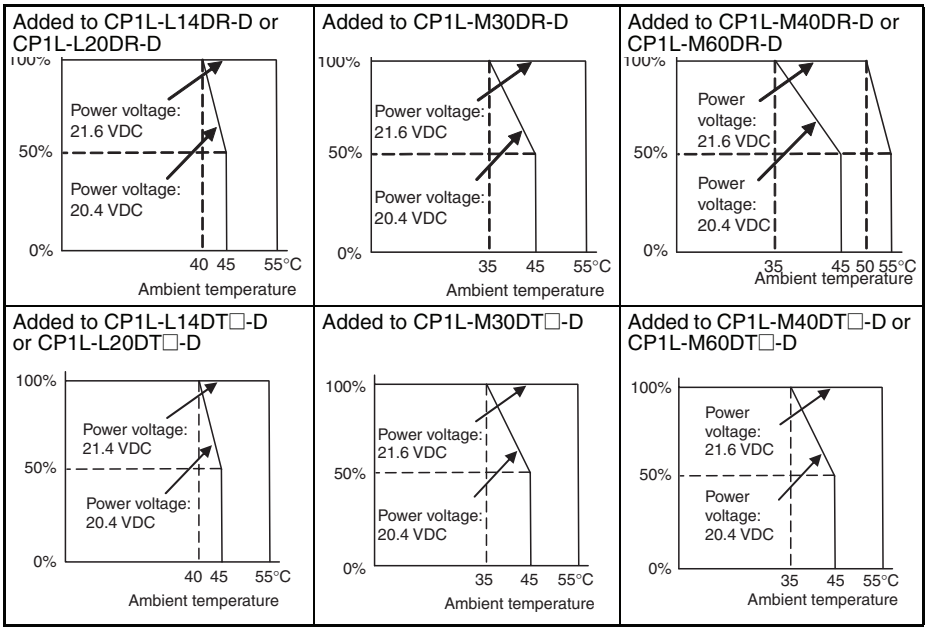

Transistor Outputs (Sinking or Sourcing)

Item	Specification				
	CP1W-40EDT CPM1A-40EDT CP1W-40EDT1 CPM1A-40EDT1	**CP1W-32ET CP1W-32ET1**	**CP1W-20EDT CPM1A-20EDT CP1W-20EDT1 CPM1A-20EDT1**	**CP1W-16ET CP1W-16ET1**	**CP1W-8ET CPM1A-8ET CP1W-8ET1 CPM1A-8ET1**
Max. switching capacity (See note2.)	4.5 to 30 VDC 0.3 A/output	4.5 to 30 VDC 0.3 A/output	24 VDC $^{+10\%}_{-5\%}$ 0.3 A/output	4.5 to 30 VDC 0.3 A/output	• OUT00/01 4.5 to 30 VDC, 0.2 A/output • OUT02 to 07 4.5 to 30 VDC, 0.3 A/output
	0.9 A/common 3.6 A/Unit	0.9 A/common 7.2 A/Unit	0.9 A/common 1.8 A/Unit	0.9 A/common 3.6 A/Unit	0.9 A/common 1.8 A/Unit
Leakage current	0.1 mA max.	0.1 mA max.	0.1 mA max.	0.1 mA max.	0.1 mA max.
Residual voltage	1.5 V max.	1.5 V max.	1.5 V max.	1.5 V max.	1.5 V max.
ON delay	0.1 ms max.	0.1 ms max.	0.1 ms.	0.1 ms max.	0.1 ms max.
OFF delay	1 ms max. 24 VDC $^{+10\%}_{-5\%}$ 5 to 300 mA	1 ms max. 24 VDC $^{+10\%}_{-5\%}$ 5 to 300 mA	1 ms max. 24 VDC $^{+10\%}_{-5\%}$ 5 to 300 mA	1 ms max. 24 VDC $^{+10\%}_{-5\%}$ 5 to 300 mA	1 ms max. 24 VDC $^{+10\%}_{-5\%}$ 5 to 300 mA
Max. number of Simultaneously ON Points of Output	16 pts (100%)	24 pts (75%)	8 pts (100%)	16 pts (100%)	8 pts (100%)
Fuse (See note 1.)	1 fuse/common				
Circuit configuration	Sinking Outputs 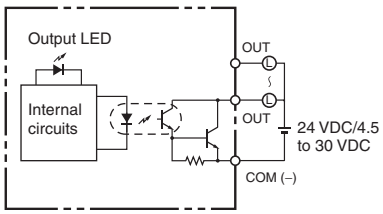		Sourcing Outputs 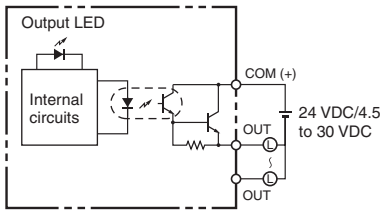		

Note (1) The fuse cannot be replaced by the user.

(2) If the ambient temperature is maintained below 50°C, up to 0.9 A/common can be used.

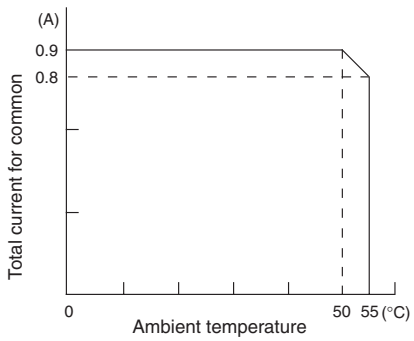

⚠ **Caution** Do not connect a load to an output terminal or apply a voltage in excess of the maximum switching capacity.

2-3 CP1L CPU Unit Operation

2-3-1 Overview of CPU Unit Configuration

The CP1L CPU Unit memory consists of the following blocks.

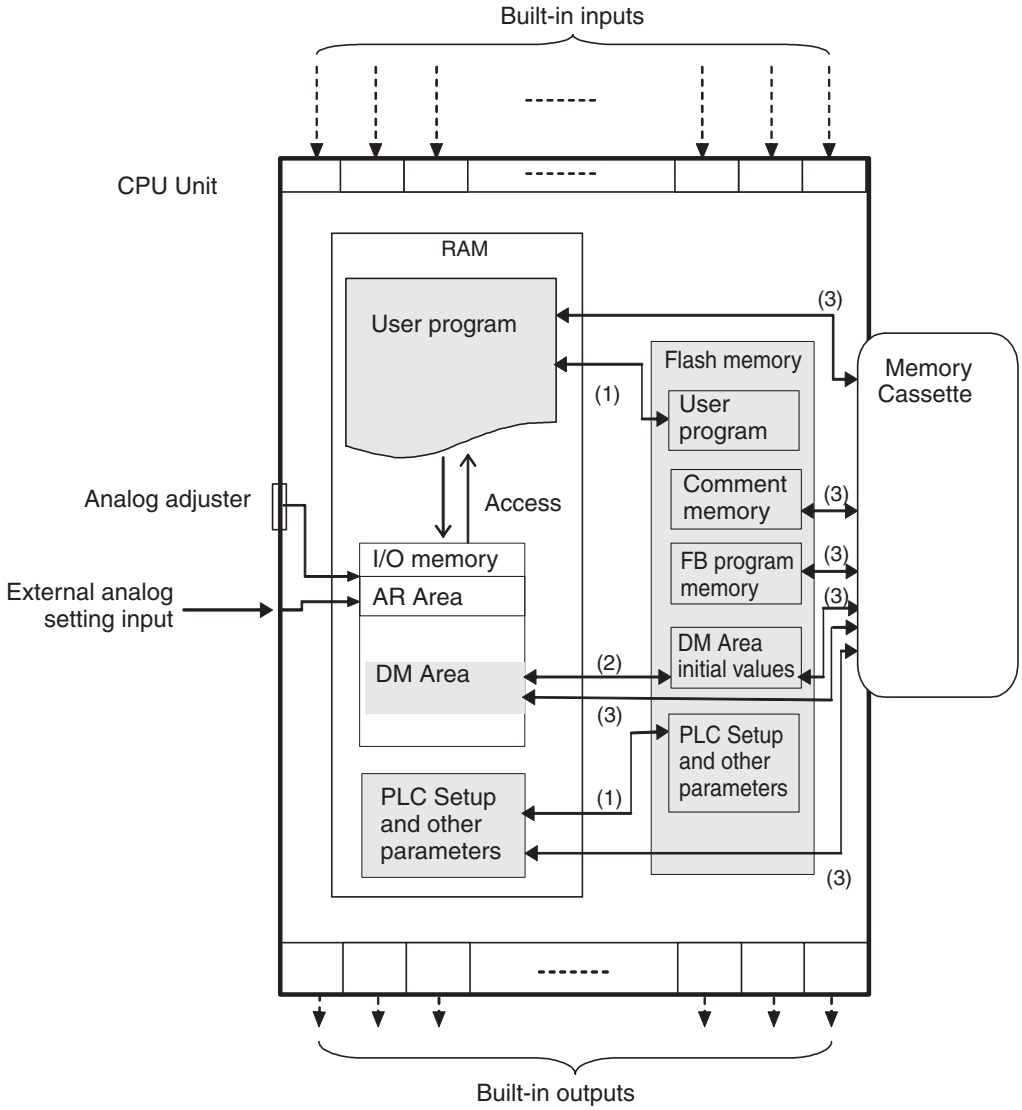

(1) • Data is backed up from RAM to the built-in flash memory when changes are made, e.g., from the CX-Programmer.

• When the power supply is turned ON, data is transferred from the built-in flash memory to RAM.

(2) • A CX-Programmer operation can be used to transfer DM Area initial values from RAM to the built-in flash memory.

• The PLC Setup can be set so that DM Area initial values are transferred from the built-in flash memory to RAM when the power supply is turned ON.

(3) • CX-Programmer operations can be used to transfer data from RAM to the Memory Cassette or from the built-in flash memory to the Memory Cassette.

- When the power supply is turned ON, data is transferred from the Memory Cassette to the built-in flash memory and RAM. Data can also be transferred from the Memory Cassette to the built-in flash memory and RAM using the CX-Programmer.

User Program

The user program consists of up to 288 tasks, including interrupt tasks. Each task is programmed from the CX-Programmer and then transferred to the CPU Unit.

There are two types of tasks: cyclic tasks and interrupt tasks. Cyclic tasks are executed once each cycle and interrupt tasks are executed only when the interrupt conditions are met. There can be up to 32 cyclic tasks and up to 256 interrupt tasks. Cyclic tasks are executed in the order of the task numbers.

Instructions programmed in the tasks are executed in order from the first instruction and then I/O memory is refreshed. When all cyclic tasks have been executed, I/O refreshing with PLC Units is performed and then the cyclic tasks are executed again starting from the one with the lowest task number. This is called the cyclic scan method.

I/O Memory

The I/O memory area is a RAM area read and written by the user. Some parts of the I/O memory are cleared when the power is interrupted. Other parts are maintained. There are parts that used for data exchange with PLC Units and parts that are used internally.

There are two ways to refresh the parts of I/O memory used for data exchange with PLC Units: Once each program execution cycle and immediately when needed when executing specific instructions.

Parameter Area

In addition to the I/O memory used as instructions operands by the user, there is also a separate memory area that can be manipulated only from the CX-Programmer. This area, called the parameter area, contains the following.

- PLC Setup
- Routing tables

PLC Setup

The PLC Setup contains configuration parameters that can be set by the user to define the basic specifications of the CPU Unit. Included are serial port settings, a minimum cycle time setting, and other parameters. For details, refer to the *CX-Programmer Operation Manual.*

Routing Tables

Tables specifying the communications paths from the Communications Units on the local PLC to remote PLCs connected on other networks must be registered in all the CPU Units in network PLCs to send and receive data between networks. These tables are called the routing tables. The routing tables consist of the relay network table and local network table.

Routing tables are created from the CX-Programmer or Support Software for Communications Units (e.g., CX-Integrator) and then transferred to each CPU Unit.

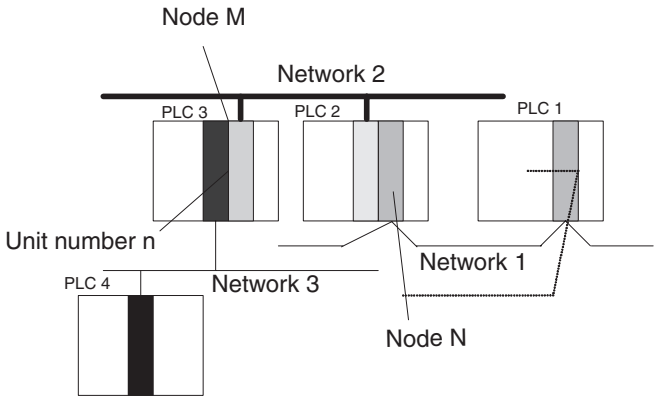

Relay Network Table for PLC 1

Remote network	Relay network	Relay node
3	1	N

Relay Network Table for PLC 2

Remote network	Relay network	Relay node
3	2	M

Local Network Table for PLC 3

Local network	Unit number
3	n

Remote Network Table

The remote network tables lists the node number and network address of the first relay node that must be passed through to reach any remote network to which the PLC is not directly connected. Once the routing tables have been registered, any remote network can be reached by passing through relay nodes.

Local Network Table

The local network table contains the unit number and network address of all Communications Units that are part of the local PLC.

Built-in Flash Memory

Flash memory is built into the CP1L CPU Units. Data in the following areas is automatically backed up to the flash memory whenever it is written in any way other than by instructions in the user program, e.g., when the CX-Programmer or PT is used to transfer or edit data, edit the program online, or transfer data from a Memory Cassette.

- User program area
- Parameter area (PLC Setup and routing tables)

The next time the power supply is turned ON, the data in the built-in flash memory is automatically transferred to user memory (i.e., the user program area and parameter area).

It is also possible to save data from data areas in I/O memory in the built-in flash memory using operations from the CX-Programmer.

The symbol table, comment file, and program index file can be stored in the comment memory in flash memory. When the program is transferred from the CX-Programmer to the CPU Unit, function block program information is also stored automatically in flash memory.

Note The BKUP indicator on the front of the CPU Unit will light whenever the built-in flash memory is being written or the Memory Cassette is being accessed. Never turn OFF the power supply to the CPU Unit when the BKUP indicator is lit.

Memory Cassette

Memory Cassettes can be used as required in system operation and maintenance. For example, they can be used to save programs, data memory contents, PLC Setup data, or I/O comments from the CX-Programmer. The contents of a Memory Cassette can also be automatically transferred if desired.

2-3-2 Flash Memory Data Transfers

Built-in Flash Memory

Writing to Flash Memory

Data	Transfer method
User program and parameter data	This data is automatically transferred from RAM to flash memory when a project is transferred from the CX-Programmer, when the data is written to RAM from a PT or other external device, or when the data is transferred from a Memory Cassette.
DM Area data	This data is transferred to flash memory only when the transfer is specified from the CX-Programmer.
Comment memory data	This data is written to flash memory when a project is transferred from the CX-Programmer and transferring comment memory is specified.
Function block source data	This data is written to flash memory when a project containing one or more function blocks is transferred from the CX-Programmer.

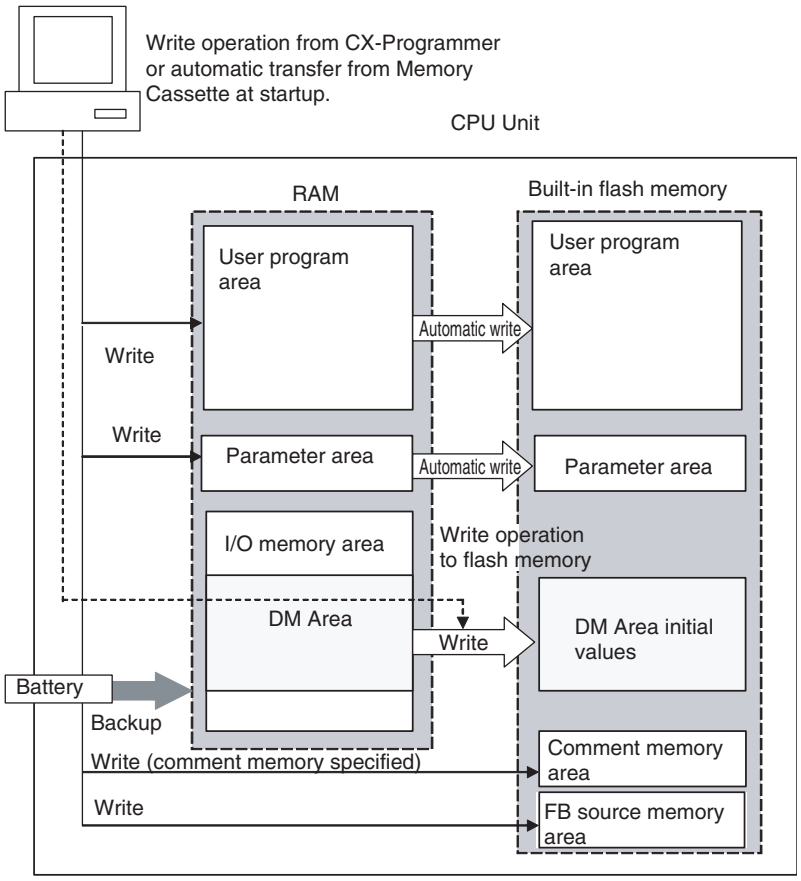

Reading from Flash Memory

Data	Read method
User program and parameter data	This data is automatically read to RAM when power is turned ON.
DM Area data	Reading this data when power is turned ON can be enabled or disabled in the PLC Setup.
Comment memory data	When the project is transferred from the CX-Programmer, comment memory can be specified as a destination to transfer the comment memory data to built-in flash memory.
Function block source data	When a project that contains function blocks is transferred from the CX-Programmer, the function block source data is transferred to built-in flash memory.

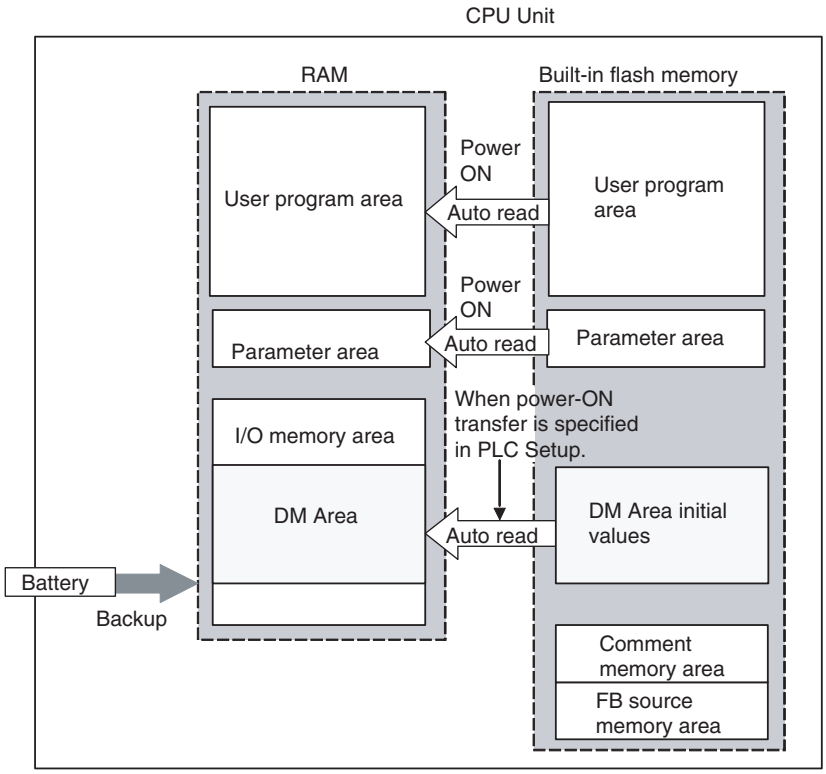

FB = Function block

2-3-3 Memory Cassette Data Transfers

Writing to a Memory Cassette

Data	Method	Source
User program and parameter data	Data is written to a Memory Cassette using write operations from the CX-Programmer.	Data in the built-in flash memory is written to the Memory Cassette.
Comment memory and function block source data		Either of both of the following can be transferred to the Memory Cassette. • Data in the built-in flash memory. • Data in RAM.
DM Area data		

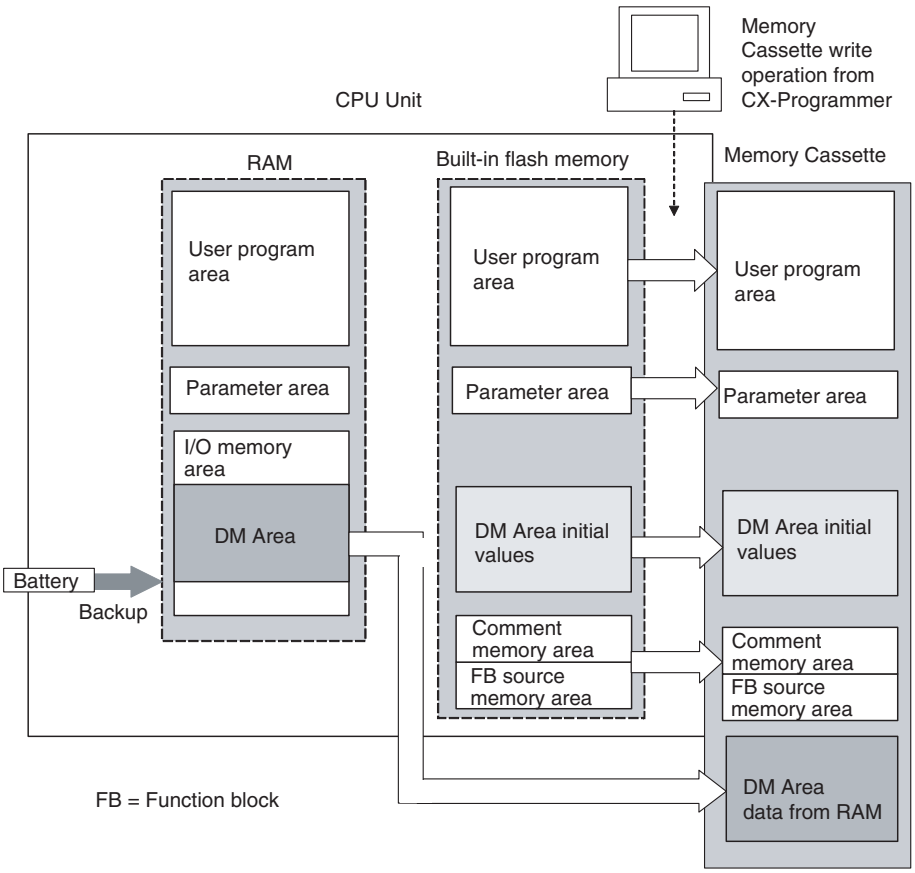

Reading from a Memory Cassette

Data	Method	Destination
User program and parameter data	This data is transferred by turning SW2 on the DIP switch to ON and turning ON the power supply.	Data in the Memory Cassette is transferred to RAM and then automatically transferred to the built-in flash memory.
Comment memory and function block source data		Data is transferred to the built-in flash memory.
DM Area data		DM Area data originally from the built-in flash memory is transferred back to the flash memory and DM Area data originally from RAM is transferred to RAM.

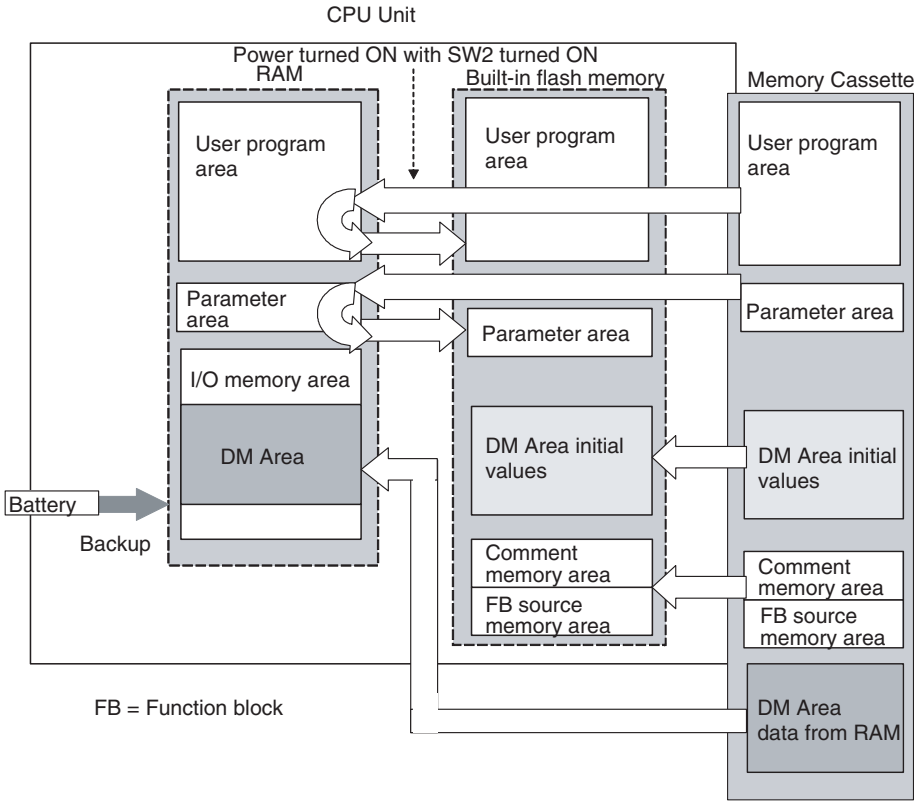

2-4 CPU Unit Operation

2-4-1 General Flow

The following flowchart shows the overall operation of the CPU Unit. First the user program is executed and then I/O is refreshed and peripheral servicing is performed. These processes are then repeated in cyclic fashion.

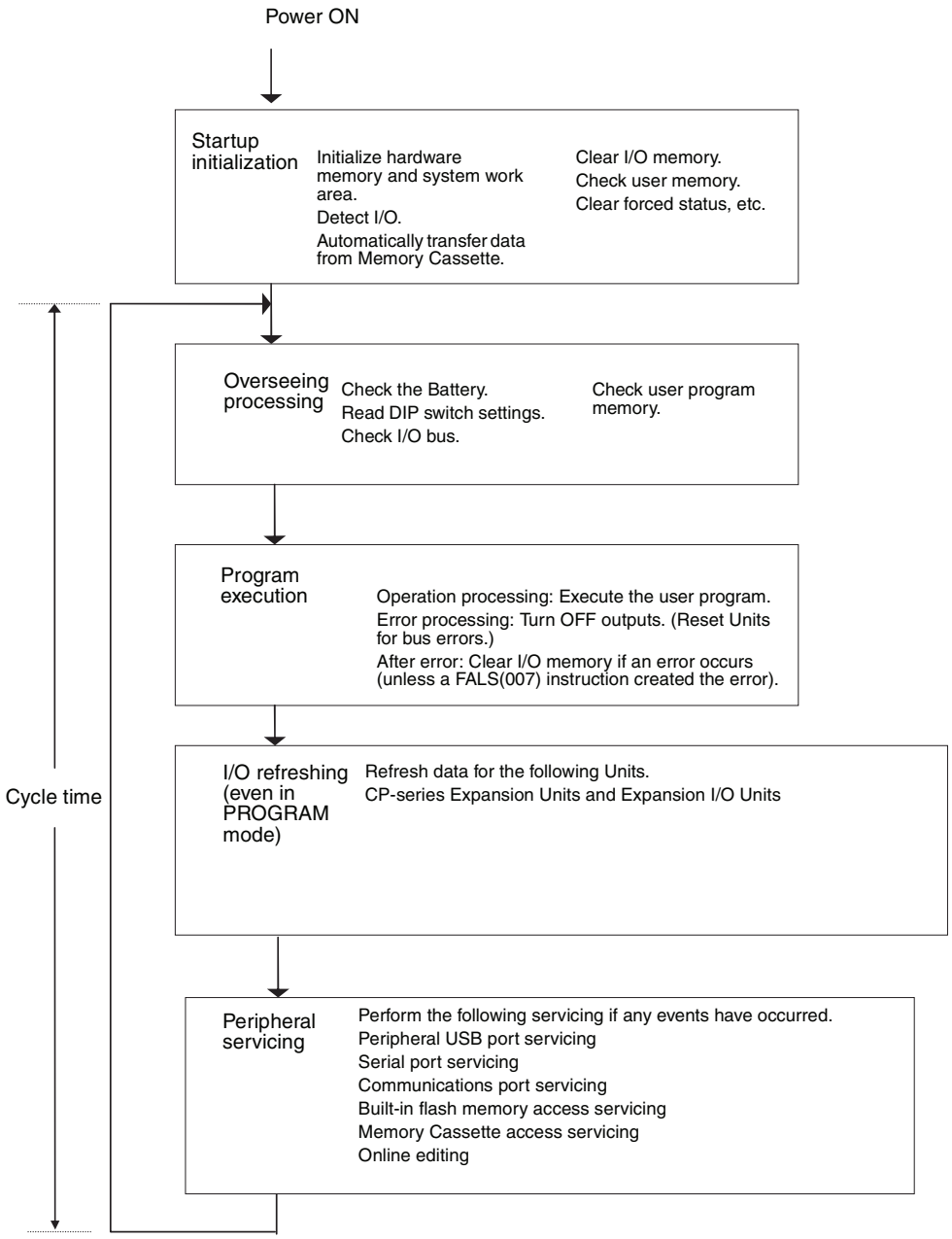

2-4-2 I/O Refreshing and Peripheral Servicing

I/O Refreshing

I/O refreshing involves cyclically transferring data with external devices using preset words in memory. I/O refreshing includes the following:

- Refreshing between I/O words in the CIO Area and CPU Unit built-in I/O, CP/CPM1A-series Expansion Units, and CP/CPM1A-series Expansion I/O Units

All I/O refreshing is performed in the same cycle (i.e., time slicing is not used). I/O refreshing is always performed after program execution.

Units	Max. data exchange	Data exchange area
CPU Unit built-in I/O	2 input words 2 output words	I/O Bit Area
CP/CPM1A-series Expansion Units and Expansion I/O Units	Fixed depending on Units	I/O Bit Area

Peripheral Servicing

Peripheral servicing involves servicing non-scheduled events for external devices. This includes both events from external devices and service requests to external devices.

Most peripheral servicing involves FINS commands. The specific amount of time set in the system is allocated to each type of servicing and executed every cycle. If all servicing cannot be completed within the allocated time, the remaining servicing is performed the next cycle.

Service	Description
USB port servicing	• Non-scheduled servicing for FINS or Host Link commands received via a USB port or serial port from the CX-Programmer, PTs, or host computers (e.g., requests for program transfers, monitoring, forced-set/reset operations, or online editing) • Non-scheduled servicing from the CPU Unit transmitted from a serial port (non-solicited communications)
Communications port servicing	
Communications port servicing	• Servicing to execute network communications or serial communications for the SEND, RECV, CMND or PMCR instructions using communications ports 0 to 7 (internal logical ports) • Servicing to execute background execution using communications ports 0 to 7 (internal logical ports)
Built-in flash memory access servicing	• Read/write processing for built-in flash memory
Memory Cassette access servicing	• Read/write processing for a Memory Cassette

Note Peripheral USB port, serial port, and communications port servicing is allocated 8% of the previous cycle time by default (the default can be changed) for each service. If servicing is separated over many cycles, delaying completion of the servicing, set the same allocated time (same time for all services) rather than a percentage under execute time settings in the PLC Setup.

2-4-3 I/O Refresh Methods

I/O for CPU Unit built-in I/O and I/O on CP/CPM1A-series Expansion Units and Expansion I/O Units is performed at the following times.

1,2,3... 1. Cyclic refresh period
2. When instructions with an immediate refresh variation are executed
3. When IORF(097) is executed

Cyclic Refreshing

I/O is refreshed after all the instructions in executable tasks have been executed.

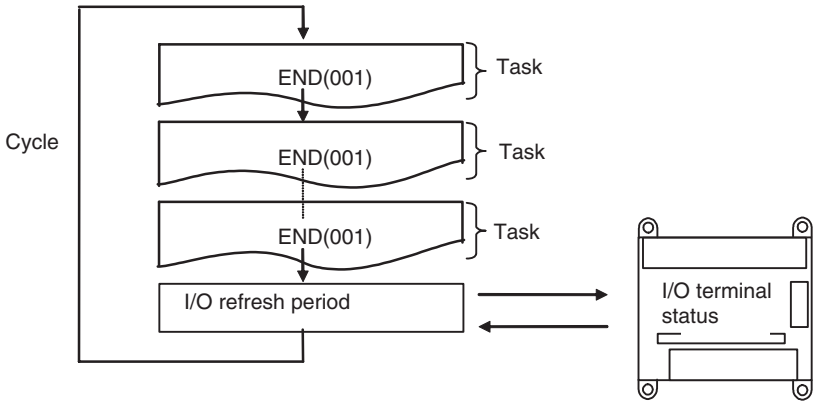

Immediate Refreshing

When the immediate refreshing variation of an instruction is specified and the instruction's operand is an input bit or word in the Built-in I/O Area, the word containing the bit or the word itself will be refreshed.

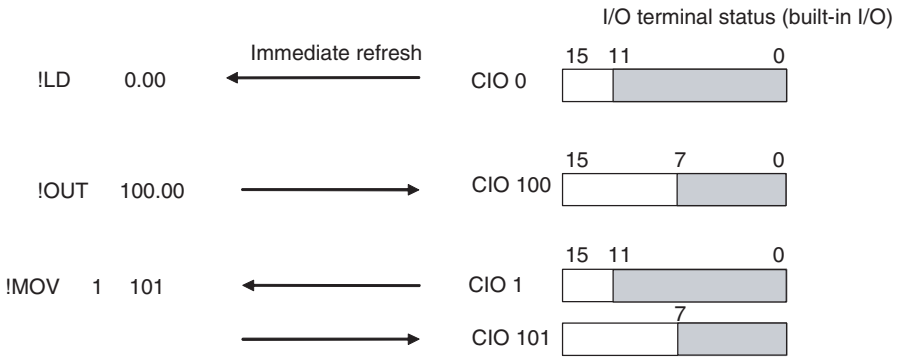

Note

(1) Immediate refreshing is possible only for the Built-in I/O Area. Use IORF(097) for I/O on CP/CPM1A-series Expansion Units and Expansion I/O Units.

(2) Refreshing Range

- Bit Operands
  The ON/OFF status of the 16 I/O points allocated to the word containing the specified bit will be refreshed.
- Word Operands
  The ON/OFF status of the 16 I/O points allocated to the specified word will be refreshed.

(3) Refresh Timing

- Input or source operands are read just before the instruction is executed.
- Output or destination (results) operands are written just after the instruction is executed.

(4) Using instructions with the immediate refresh option, instruction execution time will be increased, increasing the overall cycle time. Be sure to confirm that this will not adversely affect system operation.

IORF(097) Refreshing

When IORF(097) (I/O REFRESH) is executed, the I/O bits in the specified range of words are refreshed. IORF(097) can be used for CP/CPM1A-series Expansion Units and CP/CPM1A-series Expansion I/O Units.

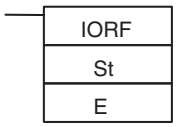

St: Starting word
E: End word
All the words from St to E, inclusive are refreshed.

Example

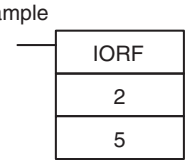

Here, the four words from CIO 2 to CIO 5 are refreshed.

If high-speed response is required from input to output, execute IORF(097) before and after the relevant instructions.

Note IORF(097) has a relatively long execution time which increases with the number of words being refreshed. Be sure to consider the affect of this time on the overall cycle time. Refer to the *CP Series Programmable Controllers Programming Manual* for instruction execution times.

2-4-4 Initialization at Startup

The following initializing processes will be performed once each time the power is turned ON.

- Confirm mounted Units and I/O allocations.
- Clear the non-holding areas of I/O memory according to the status of the IOM Hold Bit. (See note 1.)
- Clear forced status according to the status of the Forced Status Hold Bit. (See note 2.)
- Automatically transfer data from the Memory Cassette if one is mounted and automatic transfer at startup is specified.
- Perform self-diagnosis (user memory check).
- Restore the user program. (See note 3.)

Note (1) The I/O memory is held or cleared according to the status of the IOM Host Bit and the setting for IOM Hold Bit Status at Startup in the PLC Setup (read only when power is turned ON).

Auxiliary bit / PLC Setup setting		IOM Hold Bit (A500.12)	
		Clear (OFF)	Hold (ON)
IOM Hold Bit Status at Startup	Clear (OFF)	At power ON: Clear At mode change: Clear	At power ON: Clear At mode change: Hold
	Hold (ON)		At power ON: Hold At mode change: Hold

Note When the mode is changed between PROGRAMMING mode and RUN or MONITOR mode, I/O memory initialization is according to the status of the IOM Hold Bit at that time.

(2) The forced status held or cleared according to the status of the Force Status Hold Bit and the setting for Forced Status Hold Bit Status at Startup in the PLC Setup (read only when power is turned ON).

Auxiliary bit / PLC Setup setting		Forced Status Hold Bit (A500.13)	
		Clear (OFF)	Hold (ON)
Forced Status Hold Bit Status at Startup	Clear (OFF)	At power ON: Clear At mode change: Clear	At power ON: Clear At mode change: Hold
	Hold (ON)		At power ON: Hold At mode change: Hold

Note When the mode is changed between PROGRAMMING mode and RUN or MONITOR mode, forced status initialization is according to the status of the Forced Status Hold Bit at that time.

(3) User program recovery is performed if online editing is performed but the power supply to the PLC is turned OFF before the CPU Unit can complete backup processing. The BKUP indicator will light during backup processing.

2-5 CPU Unit Operating Modes

2-5-1 Operating Modes

The CPU Unit has three operating modes that control the entire user program and are common to all tasks.

PROGRAM: Programs are not executed and preparations, such as initializing the PLC Setup and other settings, transferring programs, checking programs, force-setting and force-resetting can be executed prior to program execution.

MONITOR: Programs are executed, but some operations, such as online editing, forced-set/reset, and changes to present values in I/O memory, are enabled for trial operation and other adjustments.

RUN: Programs are executed and some operations are disabled.

2-5-2 Status and Operations in Each Operating Mode

The following table lists status and operations for each mode.

Operation			PROGRAM mode	RUN mode	MONITOR mode
Program execution			Stopped	Executed	Executed
I/O refreshing			Executed	Executed	Executed
External I/O status			OFF	According to program	According to program
I/O memory	Non-holding memory		Cleared	According to program	According to program
	Holding memory		Held		
CX-Programmer operations	I/O memory monitoring		**OK**	**OK**	**OK**
	Program monitoring		**OK**	**OK**	**OK**
	Program transfers	From CPU Unit	**OK**	**OK**	**OK**
		To CPU Unit	**OK**	X	X
	Checking program		**OK**	X	X
	Setting PLC Setup		**OK**	X	X
	Changing program		**OK**	X	**OK**
	Force-setting/resetting		**OK**	X	**OK**
	Changing timer/counter SV		**OK**	X	**OK**
	Changing timer/counter PV		**OK**	X	**OK**
	Change I/O memory PV		**OK**	X	**OK**

Note The following table shows the relationship of operating modes to tasks.

Mode	Cyclic task status	Interrupt task status
PROGRAM	Disabled status (INI)	Stopped

RUN MONITOR	• Any task that has not yet been executed, will be in disabled status (INI). • A task will go to READY status if the task is set to go to READY status at startup or the TASK ON (TKON) instruction has been executed for it. • A task in READY status will be executed (RUN status) when it obtains the right to execute. • A status will go to Standby status (WAIT) if a READY task is put into Standby status by a TASK OFF (TKOF) instruction.	Executed if interrupt condition is met.

2-5-3 Operating Mode Changes and I/O Memory

Operating Mode Changes and I/O Memory

Mode Changes	Non-holding areas	Holding Areas
	• I/O bits • Data Link bits • Work bits • Timer PV/Completion Flags • Index Registers • Data Registers • Task Flags Auxiliary Area bits/words are holding or non-holding depending on the address.	• HR Area • DM Area • Counter PV and Completion Flags Auxiliary Area bits/words are holding or non-holding depending on the address.
RUN or MONITOR to PROGRAM	Cleared (See note 1.)	Held
PROGRAM to RUN or MONITOR	Cleared (See note 1.)	Held
RUN to MONITOR or MONITOR to RUN	Held (See note 2.)	Held

Note
1. The following processing is performed if the I/O Memory Hold Bit is ON. Outputs from Output Units will be turned OFF when operation stops even if I/O bit status is held in the CPU Unit.
2. The cycle time will increase by approximately 10 ms when the operating mode is changed from MONITOR to RUN mode. This will not, however, cause an error for exceeding the maximum cycle time limit.

I/O Memory Hold Bit status (A500.12)	I/O Memory			Output bits allocated to Output Units		
	Mode changed between PROGRAM and RUN/ MONITOR	Operation stopped		Mode changed between PROGRAM and RUN/ MONITOR	Operation stopped	
		Fatal error other than FALS	FALS executed		Fatal error other than FALS	FALS executed
OFF	Cleared	Cleared	Held	OFF	OFF	OFF
ON	Held	Held	Held	Held	OFF	OFF

Note Refer to *SECTION 4 I/O Memory Allocation*.

2-5-4 Startup Mode Setting

This setting in the PLC Setup determines the operating mode that will be used by the CPU Unit when the power supply is turned ON.

PLC Setup

Name	Description	Settings	Default
Startup Mode	Specifies the CPU Unit operating mode at startup	• Program (See note.) • Monitor • Run • Use programming console	Use programming console (See note.)

Note A Programming Console cannot be connected to the CP1L.

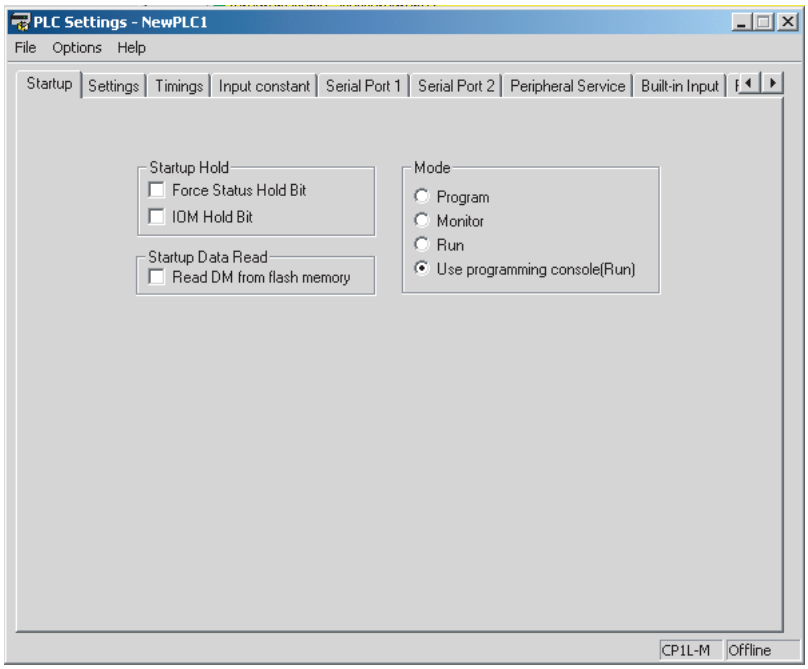

Note A Programming Console cannot be connected to a CP1L CPU Unit. If *Use programming console* is set, the CPU Unit will start in RUN mode.

2-6 Power OFF Operation

2-6-1 Overview

The following processing is performed when CPU Unit power is turned OFF. Power OFF processing will be performed if the power supply voltage falls below the specified value while the CPU Unit is in RUN or MONITOR mode.

1,2,3...

1. The CPU Unit will stop.
2. Outputs from all Output Units will be turned OFF.

Note

(1) All outputs will turn OFF despite the status of the I/O Memory Hold Bit or I/O Memory Hold Bit at power ON settings in the PLC Setup.

(2) AC Power
85% of the rated voltage: 85 V or less for a 100 to 240 V AC system

(3) DC Power
90% of rated voltage: 20.4 V DC or less

The following processing will be performed if power drops only momentarily (momentary power interruption).

1,2,3...

1. The system will continue to run unconditionally if the momentary power interruption lasts less than 10 ms for AC power or 2 ms for DC power, i.e., the time it takes the rated voltage at 85% or less to return to 85% or higher is less than 10 ms for AC power or the time it takes the rated voltage at 90% or less to return to 90% or higher is less than 2 ms for DC power.

2. A momentary power interruption that lasts more than 10 ms for AC power or more than 2 ms for DC power may or may not be detected.

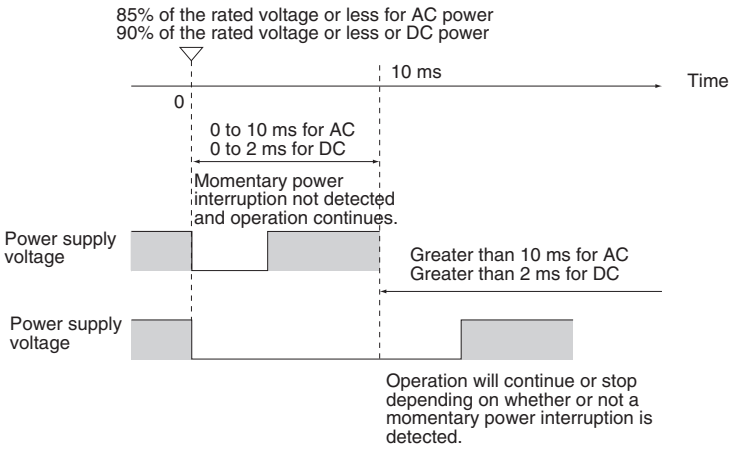

The following timing chart shows the CPU Unit power OFF operation in more detail.

Power OFF Timing Chart

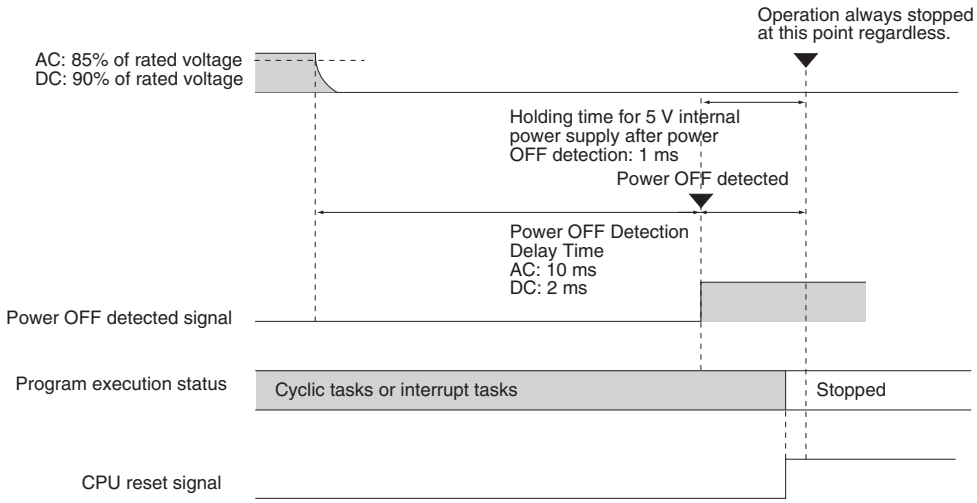

Power OFF detection time:
The time from when the power supply voltages drops to 85% or less of the rated voltage for AC power or 90% for DC power until the power OFF condition is detected.

Holding time for 5 V internal power supply after power OFF detection:
The maximum time that the 5 V internal power supply voltage will be maintained after the power OFF condition is detected. The holding time is fixed at 1 ms.

Description of Operation

Power OFF will be detected if the 100 to 240 V AC power supply falls below 85% of the rated voltage or the DC power supply falls below 90% of the rated voltage for the power OFF detection time (10 ms minimum for AC power and 2 ms minimum for DC power). The CPU reset signal will turn ON while the internal power supply is being held and the CPU Unit will be reset.

2-6-2 Instruction Execution for Power Interruptions

If power is interrupted and the interruption is detected when the CPU Unit is operating in RUN or MONITOR mode, the instruction currently being executed will be completed and then the CPU Unit will be reset.

2-7 Computing the Cycle Time

2-7-1 CPU Unit Operation Flowchart

The CPU Unit processes data in repeating cycles from the overseeing processing up to peripheral servicing as shown in the following diagram.

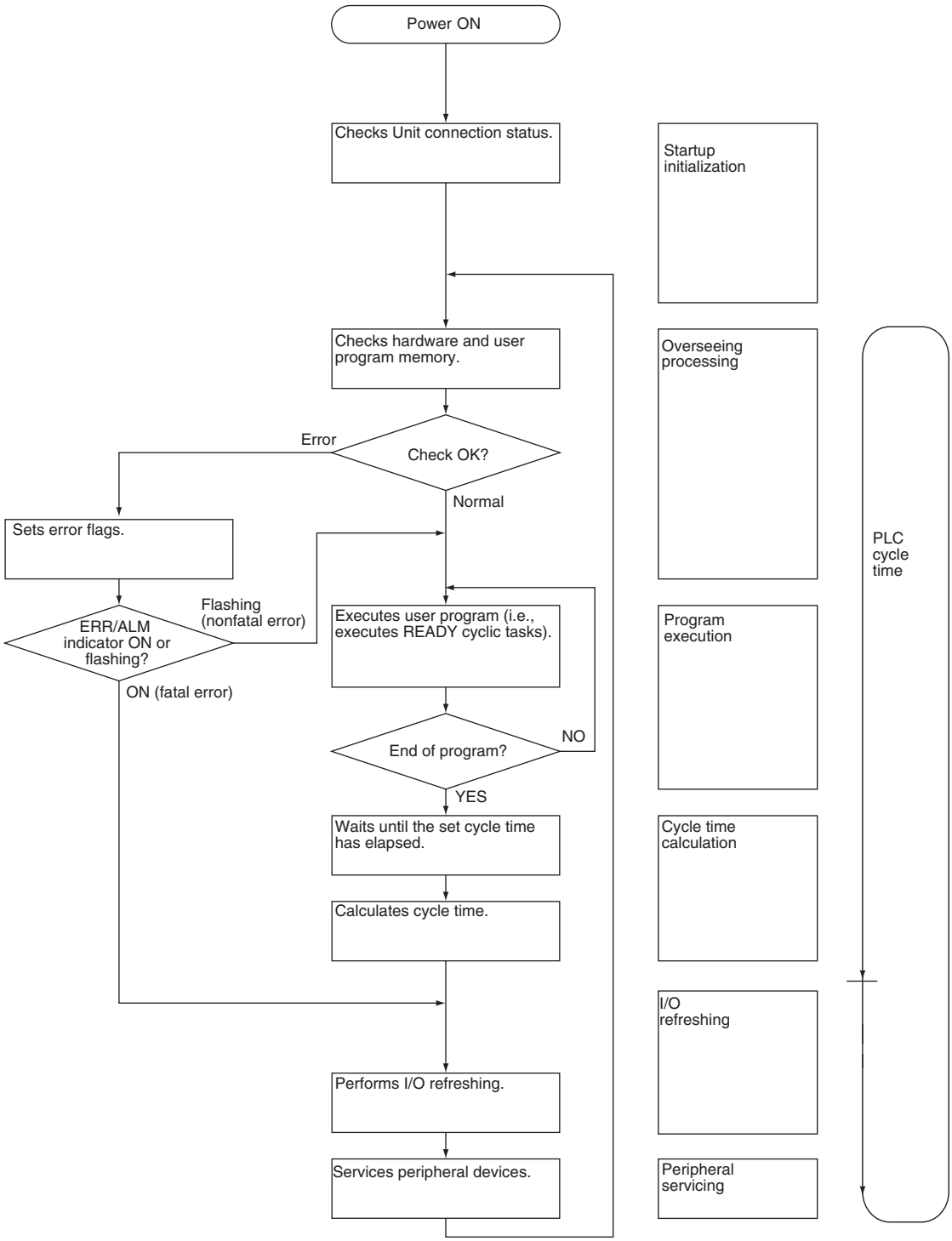

2-7-2 Cycle Time Overview

The cycle time depends on the following conditions.

- Type and number of instructions in the user program (in all cyclic tasks that are executed during a cycle, and within interrupt tasks for which the execution conditions have been satisfied)
- Type and number of CP/CPM1A-series Expansion Units and Expansion I/O Units
  - Use of protocol macros and the largest communications message
- Fixed cycle time setting in the PLC Setup
- Use of USB and serial ports
- Fixed peripheral servicing time in the PLC Setup

Note

1. The cycle time is not affected by the number of tasks that are used in the user program. The tasks that affect the cycle time are those cyclic tasks that are READY in the cycle.
2. When the mode is switched from MONITOR mode to RUN mode, the cycle time will be extended by 10 ms (this will not, however, take the cycle time over its limit).

The cycle time is the total time required for the PLC to perform the five operations given in the following tables.

Cycle time = (1) + (2) + (3) + (4) + (5)

1: Overseeing

Details	Processing time and fluctuation cause
Checks the I/O bus and user program memory, checks for battery errors, etc.	0.4 ms

2: Program Execution

Details	Processing time and fluctuation cause
Executes the user program, and calculates the total time time taken for the instructions to execute the program.	Total instruction execution time

3: Cycle Time Calculation

Details	Processing time and fluctuation cause
Waits for the specified cycle time to elapse when a minimum (fixed) cycle time has been set in the PLC Setup. Calculates the cycle time.	When the cycle time is not fixed, the time for step 3 is approximately 0. When the cycle time is fixed, the time for step 3 is the preset fixed cycle time minus the actual cycle time ((1) + (2) + (4) + (5)).

4: I/O Refreshing

Details		Processing time and fluctuation cause
CPU Unit built-in I/O and I/O on CP/CPM1A-series Expansion Units and Expansion I/O Units	Outputs from the CPU Unit to the actual outputs are refreshed first for each Unit, and then inputs.	I/O refresh time for each Unit multiplied by the number of Units used.

5: Peripheral Servicing

Details	Processing time and fluctuation cause
Services USB port. Services serial ports	If a uniform peripheral servicing time hasn't been set in the PLC Setup for this servicing, 8% of the previous cycle's cycle time (calculated in step (3)) will be allowed for peripheral servicing. If a uniform peripheral servicing time has been set in the PLC Setup, servicing will be performed for the set time. Servicing will be performed for at least 0.1 ms, however, whether the peripheral servicing time is set or not. If the ports are not connected, the servicing time is 0 ms.
Services communications ports.	If a uniform peripheral servicing time hasn't been set in the PLC Setup for this servicing, 8% of the previous cycle's cycle time (calculated in step (3)) will be allowed for peripheral servicing. If a uniform peripheral servicing time has been set in the PLC Setup, servicing will be performed for the set time. Servicing will be performed for at least 0.1 ms, however, whether the peripheral servicing time is set or not. If no communications ports are used, the servicing time is 0 ms.
Services built-in flash memory access. Serves Memory Cassette access.	If a uniform peripheral servicing time hasn't been set in the PLC Setup for this servicing, 8% of the previous cycle's cycle time (calculated in step (3)) will be allowed for peripheral servicing. If a uniform peripheral servicing time has been set in the PLC Setup, servicing will be performed for the set time. Servicing will be performed for at least 0.1 ms, however, whether the peripheral servicing time is set or not. If there is no access, the servicing time is 0 ms.

2-7-3 Functions Related to the Cycle Time

Minimum Cycle Time

Set the minimum cycle time to a non-zero value to eliminate inconsistencies in I/O responses. A minimum cycle time can be set in the PLC Setup between 1 and 32,000 ms in 1-ms increments.

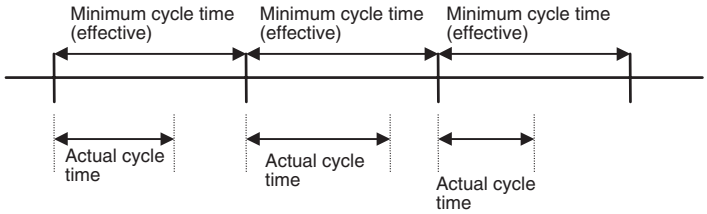

This setting is effective only when the actual cycle time is shorter than the minimum cycle time setting. If the actual cycle time is longer than the minimum cycle time setting, the actual cycle time will remain unchanged.

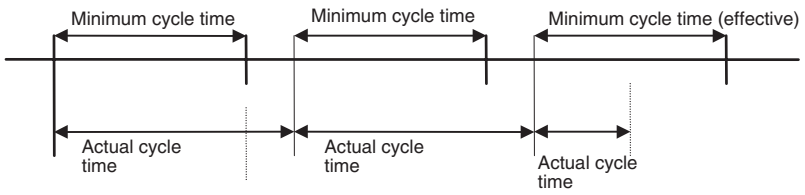

PLC Setup

Name	Settings	Default
Minimum cycle time	0000 to 7D00 hex (1 to 32,000 ms in 1-ms increments)	0000 hex: Variable cycle time

Watch Cycle Time

If the cycle time exceeds the watch (maximum) cycle time setting, the Cycle Time Too Long Flag (A401.08) will be turned ON and PLC operation will be stopped.

PLC Setup

Name	Settings	Default
Enable Watch Cycle Time Setting	0: Default (1 s) 1: User setting	0000 hex: Watch cycle time of 1 s
Watch Cycle Time	001 to FA0: 10 to 40,000 ms (10-ms increments)	

Related Flags

Name	Address	Description
Cycle Time Too Long Flag	A401.08	Turns ON if the present cycle time exceeds the Watch Cycle Time set in the PLC Setup.

Cycle Time Monitoring

The maximum cycle time is stored in A262 and A263 and the present cycle time is stored in A264 and A265 every cycle.

Related Words

Name	Addresses	Description
Maximum Cycle Time	A262 and A263	These words contain the maximum cycle time in increments of 0.1 ms. The time is updated every cycle and is recorded in 32-bit binary (0 to FFFF FFFF hex, or 0 to 429,496,729.5 ms). (A263 is the leftmost word.)
Present Cycle Time	A264 and A265	These words contain the present cycle time in increments of 0.1 ms. The time is updated every cycle and is recorded in 32-bit binary (0 to FFFF FFFF, or 0 to 429,496,729.5 ms). (A265 is the leftmost word.)

The average cycle time for the past eight cycles can be read from the CX-Programmer.

Note The following methods are effective in reducing the cycle time.

- Place tasks that do not need to be executed on standby.
- Use JMP-JME instructions to skip instructions that do not need to be executed.

2-7-4 I/O Refresh Times for PLC Units

CP-series Expansion Unit and Expansion I/O Unit I/O Refresh Times

Name	Model	I/O refresh time per Unit
Expansion I/O Units	CP1W-40EDR CPM1A-40EDR	0.39 ms
	CP1W-40EDT CPM1A-40EDT	0.39 ms
	CP1W-40EDT1 CPM1A-40EDT1	0.39 ms
	CP1W-32ER	0.33 ms
	CP1W-32ET CP1W-32ET1	0.33 ms
	CP1W-20EDT CPM1A-20EDT	0.18 ms
	CP1W-20EDT1 CPM1A-20EDT1	0.18 ms
	CP1W-16ER CPM1A-16ER	0.25 ms
	CP1W-16ET CP1W-16ET1	0.25 ms
	CP1W-8ED CPM1A-8ED	0.13 ms
	CP1W-8ER CPM1A-8ER	0.08 ms
	CP1W-8ET CPM1A-8ET	0.08 ms
	CP1W-8ET1 CPM1A-8ET1	0.08 ms
Analog Input Units	CP1W-AD041 CPM1A-AD041	0.61 ms
Analog Output Units	CP1W-DA021	0.33 ms
	CP1W-DA041 CPM1A-DA041	0.33 ms
Analog I/O Units	CPM1A-MAD01	0.29 ms
	CP1W-MAD11 CPM1A-MAD11	0.32 ms
Temperature Sensor Units	CP1W-TS001 CPM1A-TS001	0.25 ms
	CP1W-TS002 CPM1A-TS002	0.52 ms
	CP1W-TS101 CPM1A-TS101	0.25 ms
	CP1W-TS102 CPM1A-TS102	0.52 ms
DeviceNet I/O Link Unit	CPM1A-DRT21	0.38 ms
CompoBus/S I/O Link Unit	CP1W-SRT21 CPM1A-SRT21	0.21 ms

Note The I/O refresh time for CPU Unit built-in I/O is included in overhead processing.

2-7-5 Cycle Time Calculation Example

The following example shows the method used to calculate the cycle time when CP-series Expansion I/O Units only are connected to a CP1L CPU Unit.

Conditions

Item	Details	
CP1L	CP1W-40EDR 40-pt I/O Unit	1 Unit
User program	5 K steps	LD instructions: 2.5 Ksteps, OUT instructions: 2.5 Ksteps
USB port connection	Yes and no	
Fixed cycle time processing	No	
Serial port connection	No	
Other peripheral servicing	No	

Calculation Example

Process name	Calculation	Processing time	
		USB port connected	USB port not connected
(1) Overseeing	---	0.4 ms	0.4 ms
(2) Program execution	0.55 μs × 2,500 + 1.1 μs × 2,500	4.1 ms	4.1 ms
(3) Cycle time calculation	(Minimum cycle time not set)	0 ms	0 ms
(4) I/O refreshing	0.39 ms	0.39 ms	0.39 ms
(5) Peripheral servicing	(Only USB port connected)	0.1 ms	0 ms
Cycle time	(1) + (2) + (3) + (4) + (5)	4.99 ms	4.89 ms

2-7-6 Online Editing Cycle Time Extension

When online editing is executed to change the program from the CX-Programmer while the CPU Unit is operating in MONITOR mode, the CPU Unit will momentarily suspend operation while the program is being changed. The period of time that the cycle time is extended is determined by the following conditions.

- Number of steps changed
- Editing operations (insert/delete/overwrite)
- Types of instructions

The cycle time extension for online editing is negligibly affected by the size of task programs. If the maximum program size for a task is 10 Ksteps, the online editing cycle time extension will be as follows:

CPU Unit	Increase in cycle time for online editing
CP1L CPU Unit	Maximum: 16 ms, Normal: 12 ms (for a program size of 10 Ksteps)

When editing online, the cycle time will be extended by according to the editing that is performed. Be sure that the additional time will not adversely affect system operation.

Note When there is one task, online editing is processed all in the cycle time following the cycle in which online editing is executed (written). When there are multiple tasks (cyclic tasks and interrupt tasks), online editing is separated, so that for n tasks, processing is executed over n to n ×2 cycles max.

2-7-7 I/O Response Time

The I/O response time is the time it takes from when an input turns ON, the data is recognized by the CPU Unit, and the user program is executed, up to the time for the result to be output to an output terminal. The length of the I/O response time depends on the following conditions.

- Timing of Input Bit turning ON.
- Cycle time.

Minimum I/O Response Time

The I/O response time is shortest when data is retrieved immediately before I/O refresh of the CPU Unit. The minimum I/O response time is calculated as follows:

Minimum I/O response time = Input ON delay + Cycle time + Output ON delay

Note The input and output ON delays depend on the type of terminals used on the CPU Unit or the model number of the Unit being used.

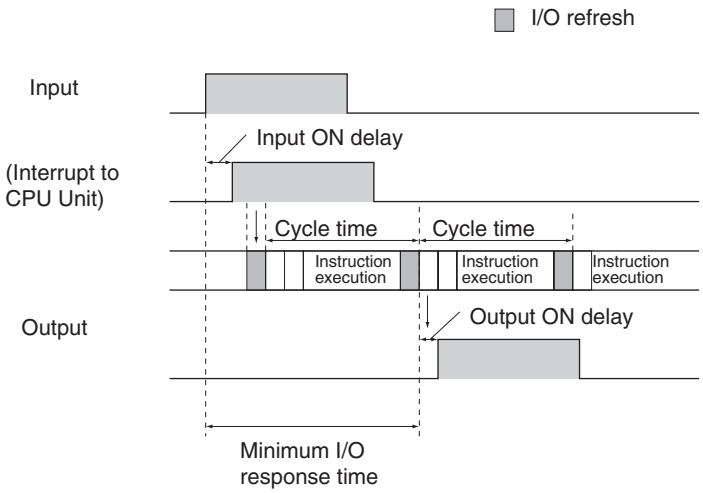

Maximum I/O Response Time

The I/O response time is longest when data is retrieved immediately after I/O refresh period of the CPU Unit. The maximum I/O response time is calculated as follows:

Maximum I/O response time = Input ON delay + (Cycle time × 2) + Output ON delay

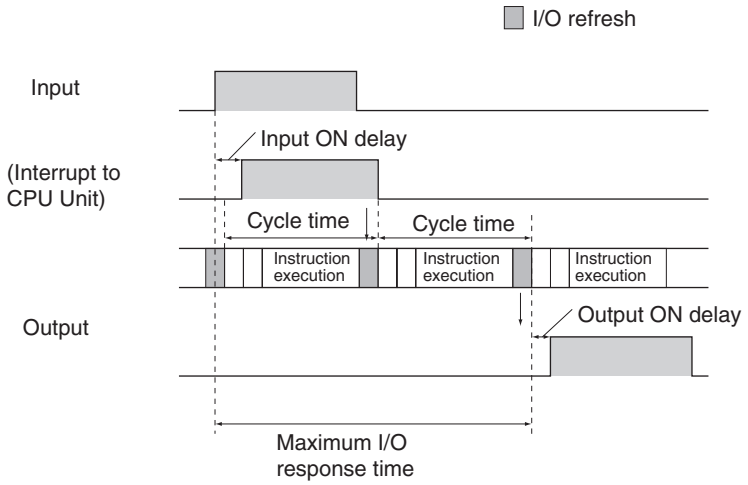

Calculation Example

Conditions:		
	Input ON delay	1 ms (normal input with input constant set to 0 ms)
	Output ON delay	0.1 ms (transistor output)
	Cycle time	20 ms

Minimum I/O response time = 1 ms + 20 ms + 0.1 ms = 21.1 ms

Maximum I/O response time = 1 ms + (20 ms × 2) + 0.1 ms = 41.1 ms

Input Response Times

Input response times can be set in the PLC Setup. Increasing the response time reduces the effects of chattering and noise. Decreasing the response time allows reception of shorter input pulses, (but the pulse width must be longer than the cycle time).

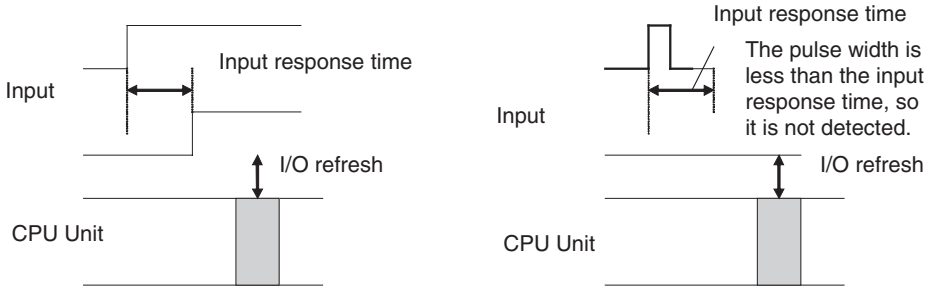

PLC Setup

Name	Description	Settings	Default
Input constants	Input response times	00 hex: 8 ms 10 hex: 0 ms 11 hex: 0.5 ms 12 hex: 1 ms 13 hex: 2 ms 14 hex: 4 ms 15 hex: 8 ms 16 hex: 16 ms 17 hex: 32 ms	00 hex (8 ms)

2-7-8 Interrupt Response Times

Input Interrupt Tasks

The interrupt response time for I/O interrupt tasks is the time taken from when a built-in input has turned ON (or OFF) until the I/O interrupt task has actually been executed. The length of the interrupt response time for I/O interrupt tasks depends on the following conditions.

Item	Interrupt response time	Counter interrupts
Hardware response	Rise time: 50 μs	---
	Fall time: 50 μs	---
Software interrupt response	Minimum: 134 μs	Minimum: 236 μs
	Maximum: 234 μs + Wait time (See note 1.)	Maximum: 336 μs + Wait time (See note1.)

Note

(1) The wait time occurs when there is competition with other interrupts. As a guideline, the wait time will be 6 to 169 μs.

(2) I/O interrupt tasks can be executed during execution of the user program (even while an instruction is being executed by stopping the execution of an instruction), I/O refresh, peripheral servicing, or overseeing. The interrupt response time is not affected by which of the above processing operations during which the interrupt inputs turns ON. I/O interrupts, however, are not executed during execution of other interrupt tasks even if the I/O interrupt conditions are satisfied. Instead, the I/O interrupts are

executed in order of priority after the current interrupt task has completed execution and the software interrupt response time has elapsed.

The interrupt response time of input interrupt tasks is calculated as follows:

Interrupt response time = Input ON delay + Software interrupt response time

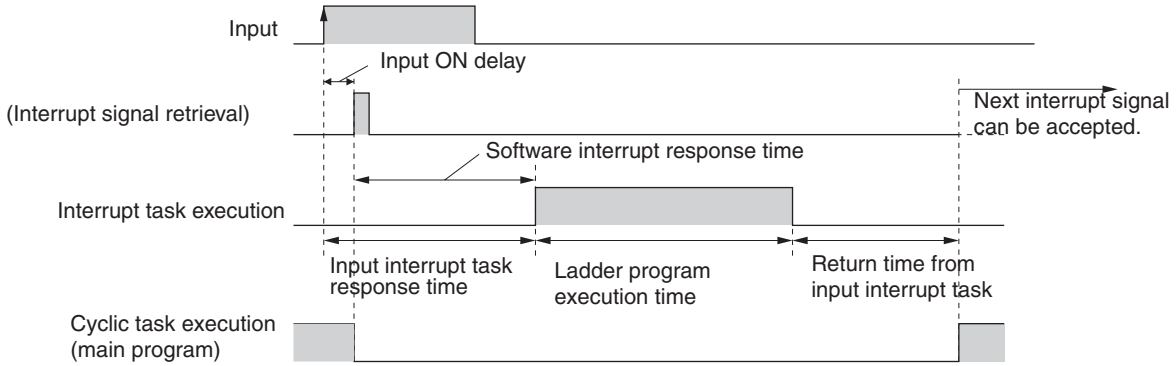

The time from completing the ladder program in the input interrupt task until returning to cyclic task execution is 60 μs.

Scheduled Interrupt Tasks The interrupt response time of scheduled interrupt tasks is the time taken from after the scheduled time specified by the MSKS(690) instruction has elapsed until the interrupt task has actually been executed. The length of the interrupt response time for scheduled interrupt tasks is 1 ms max. There is also an error of 80 μs in the time to the first scheduled interrupt (0.5 ms min.).

Note Scheduled interrupt tasks can be executed during execution of the user program (even while an instruction is being executed by stopping the execution of an instruction), I/O refresh, peripheral servicing, or overseeing. The interrupt response time is not affected by which of the above processing operations during which the scheduled interrupt time occurs. Scheduled interrupts, however, are not executed during execution of other interrupt tasks even if the interrupt conditions are satisfied. Instead, the interrupts are executed in order of priority after the current interrupt task has completed execution and the software interrupt response time has elapsed.

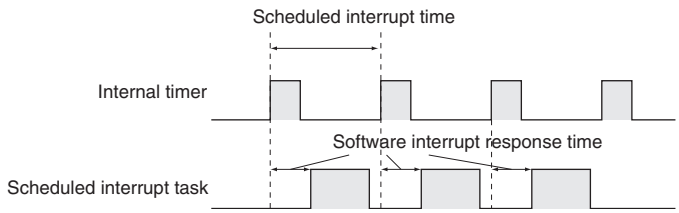

2-7-9 Serial PLC Link Response Performance

The response times for CPU Units connected via a Serial PLC Link (master to slave or slave to master) can be calculated as shown below. If a PT is in the Serial PLC Link, however, the amount of communications data will not be fixed and the values will change.

- Maximum I/O response time (not including hardware delay) =
  Master cycle time + Communications cycle time + Slave cycle time + 4 ms
- Minimum I/O response time (not including hardware delay) =
  Slave communications time + 0.8 ms

Here,

Number of participating slave nodes	The number of slaves to which links have been established within the maximum unit number set in the master.
Number of non-participating slave nodes	The number of slaves not participating in the links within the maximum unit number set in the master
Communications cycle time (ms)	Slave communications time × Number of participating slave nodes + 10 × Number of non-participating slave nodes
Slave communications time (ms)	• Communications time set to *Standard* 0.4 + 0.286 × ((No. of slaves + 1) × No. of link words × 2 + 12) • Communications time set to *Fast* 0.4 + 0.0955 × ((No. of slaves + 1) × No. of link words × 2 + 12)

2-7-10 Pulse Output Start Time

The pulse output start time is the time required from executing a pulse output instruction until pulses are output externally. This time depends on the pulse output instruction that is used and operation that is performed.

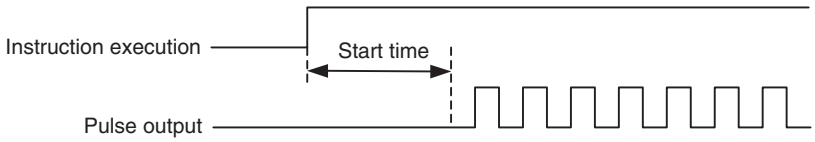

Pulse output instruction	Start time
SPED: continuous	86 μs
SPED: independent	98 μs
ACC: continuous	103 μs
ACC: independent, trapezoidal	122 μs
ACC: independent, triangular	123 μs
PLS2: trapezoidal	145 μs
PLS2: triangular	146 μs

2-7-11 Pulse Output Change Response Time

The pulse output change response time is the time for any change made by executing an instruction during pulse output to actually affect the pulse output operation.

Pulse output instruction	Change response time
INI: immediate stop	63 μs + 1 pulse output time
SPED: immediate stop	106 μs + 1 pulse output time
ACC: deceleration stop	1 control cycle (4 ms) minimum, 2 control cycles (8 ms) maximum
PLS2: deceleration stop	
SPED: speed change	
ACC: speed change	
PLS2: target position change in reverse direction	
PLS2: target position change in same direction at same speed	
PLS2: target position change in same direction at different speed	

SECTION 3
Installation and Wiring

This section describes how to install and wire the CP1L.

3-1 Fail-safe Circuits 100
3-2 Installation Precautions 101
3-2-1 Installation and Wiring Precautions 101
3-3 Mounting 103
3-3-1 Mounting in a Panel 103
3-3-2 Connecting Expansion Units and Expansion I/O Units 106
3-3-3 DIN Track Installation 108
3-4 Wiring CP1L CPU Units 110
3-4-1 Wiring Power Supply and Ground Lines 111
3-4-2 Wiring Built-in I/O 113
3-4-3 Wiring Safety and Noise Controls 116
3-5 Wiring CPU Unit I/O 118
3-5-1 I/O Wiring for CPU Units with 60 I/O Points 118
3-5-2 I/O Wiring for CPU Units with 40 I/O Points 119
3-5-3 I/O Wiring for CPU Units with 30 I/O Points 121
3-5-4 I/O Wiring for CPU Units with 20 I/O Points 122
3-5-5 I/O Wiring for CPU Units with 14 I/O Points 124
3-5-6 I/O Wiring for CPU Units with 10 I/O Points 125
3-5-7 Pulse Input Connection Examples 127
3-5-8 Pulse Output Connection Examples 127
3-6 CP/CPM1A-series Expansion I/O Unit Wiring 130

3-1 Fail-safe Circuits

Always set up safety circuits outside of the PLC to prevent dangerous conditions in the event of errors in the CP1L CPU Unit or external power supply. In particular, be careful of the following points.

Supply Power to the CP1L CPU Unit before the Controlled System

If the PLC's power supply is turned ON after the controlled system's power supply, outputs in Units such as DC Output Units may malfunction momentarily. To prevent any malfunction, add an external circuit that prevents the power supply to the controlled system from going ON before the power supply to the PLC itself.

Managing CPU Unit Errors

When any of the following errors occurs, PLC operation (program execution) will stop and all outputs from Output Units will be turned OFF.

- A CPU error (watchdog timer error) or CPU on standby
- A fatal error (memory error, I/O bus error, duplicate number error, too many I/O points error, I/O setting error, program error, cycle time too long error, or FALS(007) error) (See note.)

Always add any circuits necessary outside of the PLC to ensure the safety of the system in the event of an error that stops PLC operation.

Note When a fatal error occurs, all outputs from Output Units will be turned OFF even if the IOM Hold Bit has been turned ON to protect the contents of I/O memory. (When the IOM Hold Bit is ON, the outputs will retain their previous status after the PLC has been switched from RUN/MONITOR mode to PROGRAM mode.)

Managing Output Malfunctions

It is possible for an output to remain ON due to a malfunction in the internal circuitry of the Output Unit, such as a relay or transistor malfunction. Always add any circuits necessary outside of the PLC to ensure the safety of the system in the event that an output fails to go OFF.

Interlock Circuits

When the PLC controls an operation such as the clockwise and counterclockwise operation of a motor and if there is any possibility of an accident or mechanical damage due to faulty PLC operation, provide an external interlock such as the one shown below to prevent both the forward and reverse outputs from turning ON at the same time.

Example

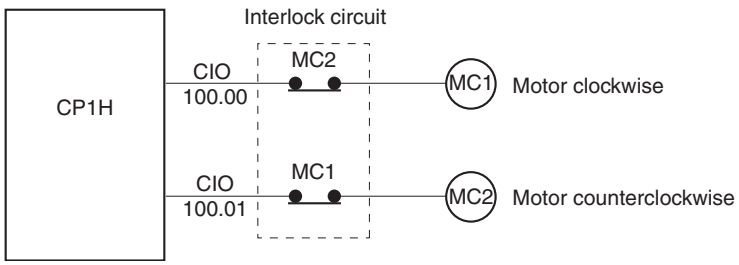

This circuit prevents outputs MC1 and MC2 from both being ON at the same time even if both PLC outputs CIO 100.00 and CIO 100.01 are both ON, so the motor is protected even if the PLC is programmed improperly or malfunctions.

3-2 Installation Precautions

3-2-1 Installation and Wiring Precautions

Always consider the following factors when installing and wiring the PLC to improve the reliability of the system and make the most of the CP1L functions.

Ambient Conditions

Do not install the PLC in any of the following locations.

- Locations subject to ambient temperatures lower than 0°C or higher than 55°C.
- Locations subject to drastic temperature changes or condensation.
- Locations subject to ambient humidity lower than 10% or higher than 90%.
- Locations subject to corrosive or flammable gases.
- Locations subject to excessive dust, salt, or metal filings.
- Locations that would subject the PLC to direct shock or vibration.
- Locations exposed to direct sunlight.
- Locations that would subject the PLC to water, oil, or chemical reagents.

Always enclose or protect the PLC sufficiently in the following locations.

- Locations subject to static electricity or other forms of noise.
- Locations subject to strong electromagnetic fields.
- Locations subject to possible exposure to radioactivity.
- Locations close to power lines.

Installation in Cabinets or Control Panels

When the CP1L is being installed in a cabinet or control panel, always provide proper ambient conditions as well as access for operation and maintenance.

Temperature Control

The ambient temperature within the enclosure must be within the operating range of 0°C to 55°C. When necessary, take the following steps to maintain the proper temperature.

- Provide enough space for good air flow.
- Do not install the PLC above equipment that generates a large amount of heat, such as heaters, transformers, or high-capacity resistors.
- If the ambient temperature exceeds 55°C, install a cooling fan or air conditioner.

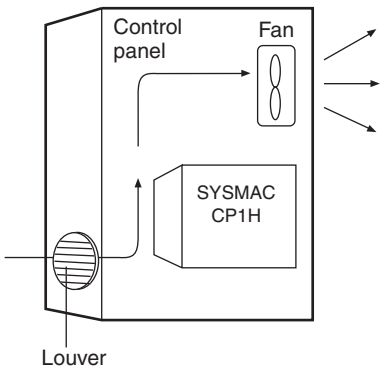

Accessibility for Operation and Maintenance

- To ensure safe access for operation and maintenance, separate the PLC as much as possible from high-voltage equipment and moving machinery.
- The PLC will be easiest to install and operate if it is mounted at a height of about 1,000 to 1,600 mm.

⚠**Caution** Do not touch the power supply or the area around the I/O terminals while power is being supplied or immediately after power has been turned OFF. Doing so may result in burns.

⚠**Caution** After the power supply has been turned OFF, wait until the PLC has sufficiently cooled before touching it.

Improving Noise Resistance

- Do not mount the PLC in a control panel containing high-voltage equipment.
- Install the PLC at least 200 mm from power lines.

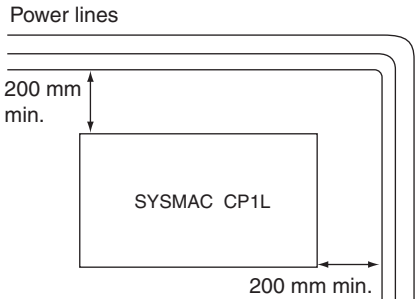

- Ground the mounting plate between the PLC and the mounting surface.

Mounting in a Panel

- The CP1L must be installed in the orientation shown below to ensure adequate cooling.

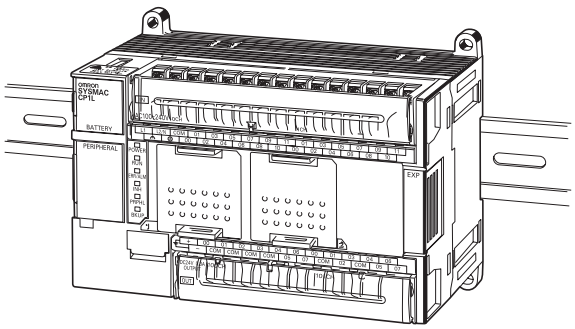

• Do not install the CP1L in any of the following orientations.

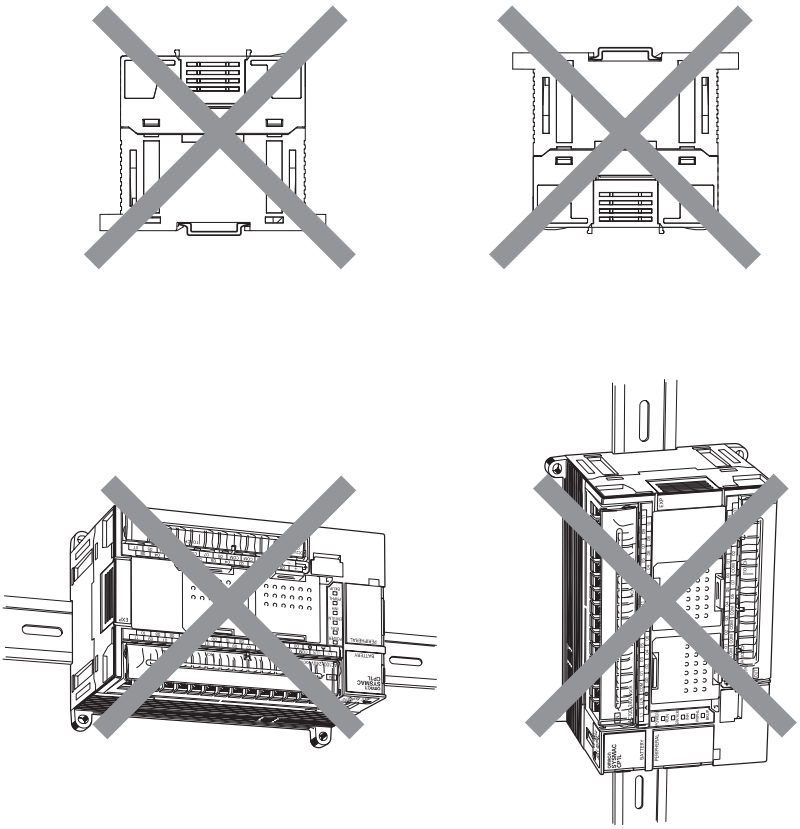

3-3 Mounting

3-3-1 Mounting in a Panel

When mounting the CP1L CPU Unit in a panel, use either surface installation or DIN Track installation.

Surface Installation

Even if a DIN Track is not used, a CP1L CPU Unit and CP/CPM1A-series Expansion Units or Expansion I/O Units can be mounted using M4 screws.

For restrictions on the number of Expansion Units and Expansion I/O Units that can be connected, refer to *1-2 System Configuration*.

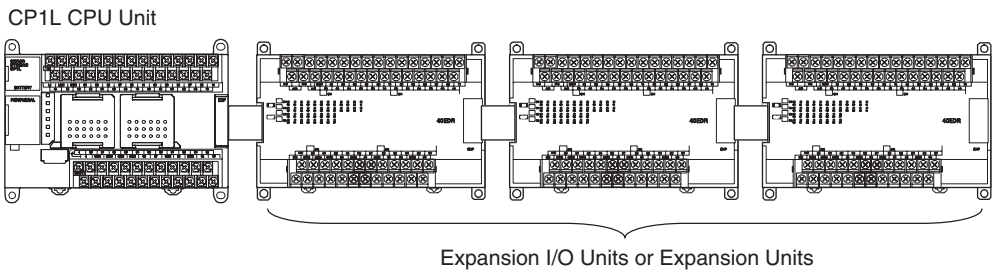

DIN Track Installation

The CP1L CPU Unit, Expansion Units, and Expansion I/O Units can be mounted to DIN Track. Secure the DIN Track with screws in at least three places.

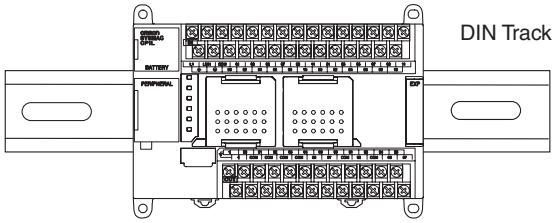

Using I/O Connecting Cable

When using Expansion Units and Expansion I/O Units, it is possible to use CP1W-CN811 Connecting Cable to arrange the Units in upper and lower rows. The following restrictions apply:

- I/O Connecting Cable can be used in one place only, and not in multiple places.

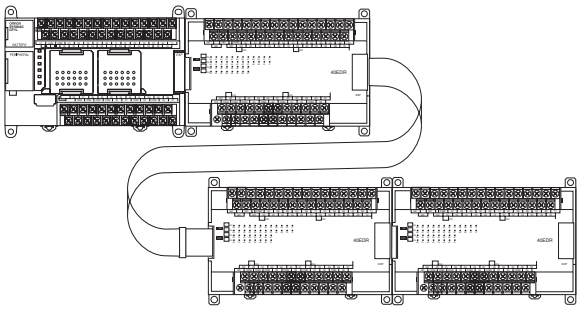

Wiring Ducts

Whenever possible, route I/O wiring through wiring ducts. Install the duct so that it is easy to wire from the I/O Units through the duct. It is handy to have the duct at the same height as the PLC.

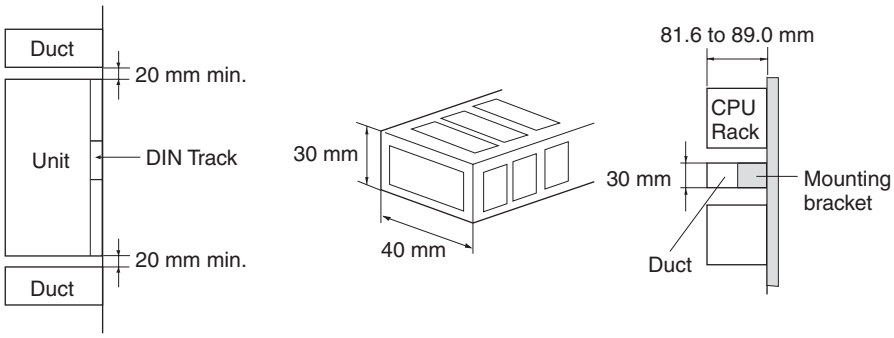

Note Tighten terminal block screws and cable screws to the following torque.
M4: 1.2 N·m
M3: 0.5 N·m

Routing Wiring Ducts

Install the wiring ducts at least 20 mm between the tops of the PLC and any other objects, (e.g., ceiling, wiring ducts, structural supports, devices, etc.) to provide enough space for air circulation and replacement of Units.

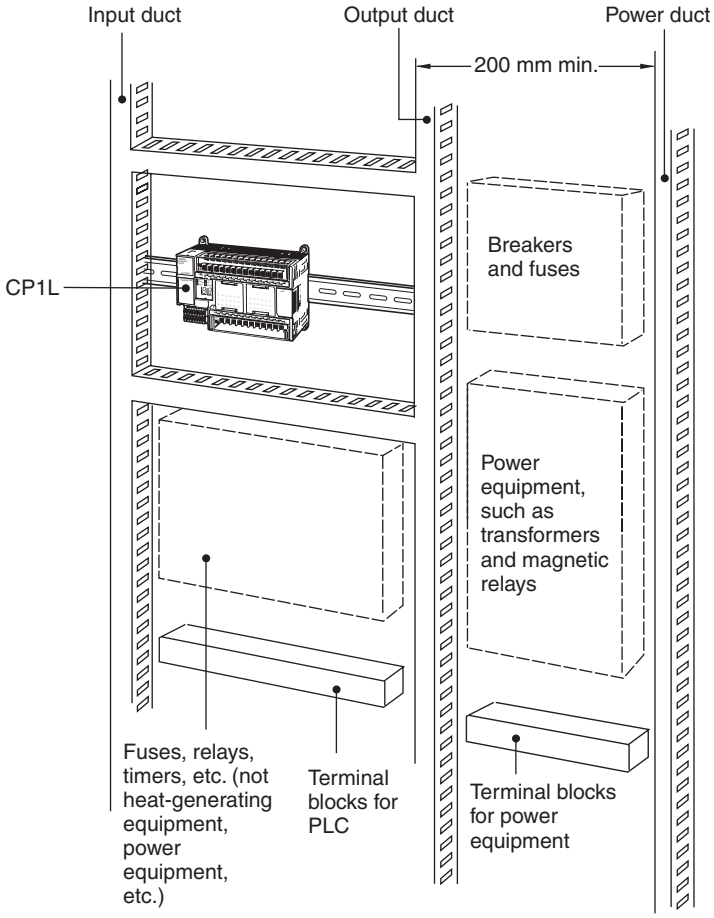

Dimensions

External Dimensions

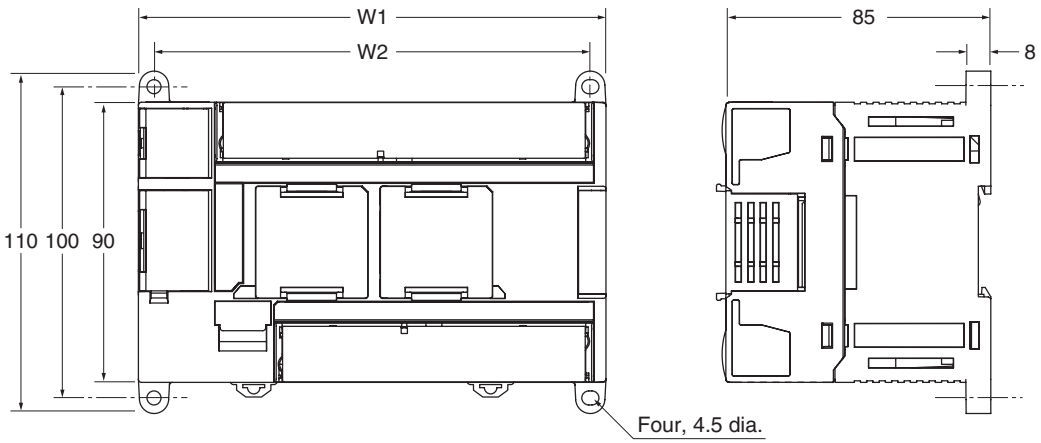

Model	W1	W2
CP1L-M60D□-□	195	185
CP1L-M40D□-□	150	140
CP1L-M30D□-□	130	120
CP1L-L20D□-□	86	76

Model	W1	W2
CP1L-L14D□-□	86	76
CP1L-L10D□-□	66	56

Mounting Height

The mounting height is approximately 90 mm.

When a cable is connected to an Option Board, however, the additional height must be factored in. Always allow for the additional height when considering the depth of the control panel in which the PLC is to be mounted.

3-3-2 Connecting Expansion Units and Expansion I/O Units

Leave approximately 10 mm of space between the CPU Unit and the Expansion Units or Expansion I/O Units.

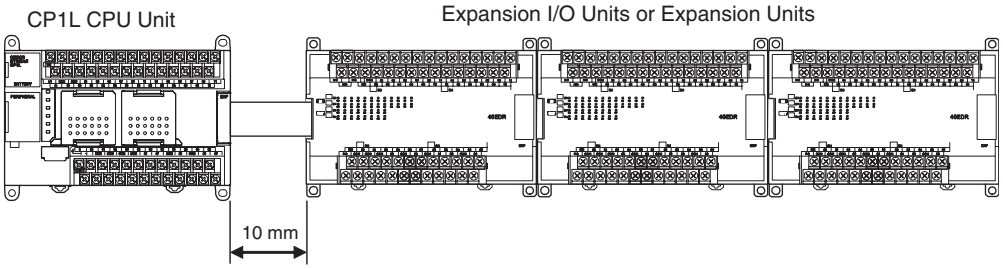

Mounting Method

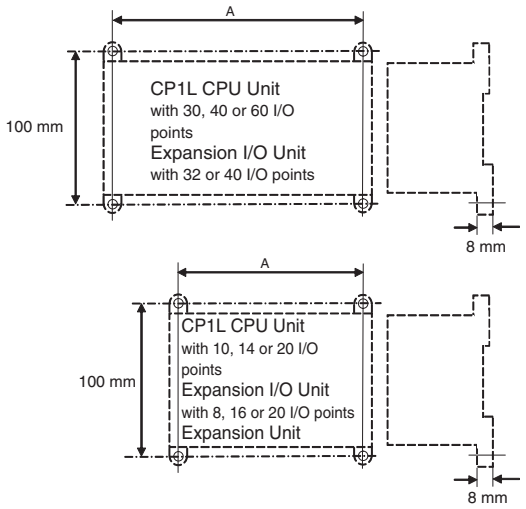

Unit		A (mm)
CP1L CPU Unit	60 I/O points	185 ±0.5
	40 I/O points	140 ±0.5
	30 I/O points	120 ±0.5
	20 I/O points	76 ±0.5
	14 I/O points	76 ±0.5
	10 I/O points	56 ±0.5
Expansion I/O Unit	40 I/O points	140 ±0.2
	32 outputs	140 ±0.2
	20 I/O points	76 ±0.2
	16 outputs	76 ±0.2
	8 inputs	56 ±0.2
	8 outputs	56 ±0.2
Analog I/O Unit	MAD01	56 ±0.2
	MAD11 AD041 DA041 DA021	76 ±0.2
Temperature Sensor Unit		76 ±0.2
CompoBus/S I/O Link Unit		56 ±0.2
DeviceNet I/O Link Unit		56 ±0.2

Space between Units When Expansion I/O Units Are Connected

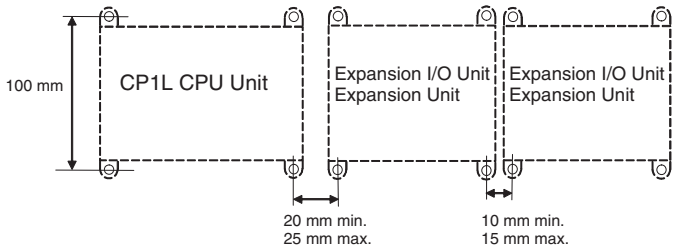

1,2,3... 1. Remove the cover from the CPU Unit's or the Expansion I/O Unit's expansion connector. Use a flat-blade screwdriver to remove the cover from the Expansion I/O Connector.

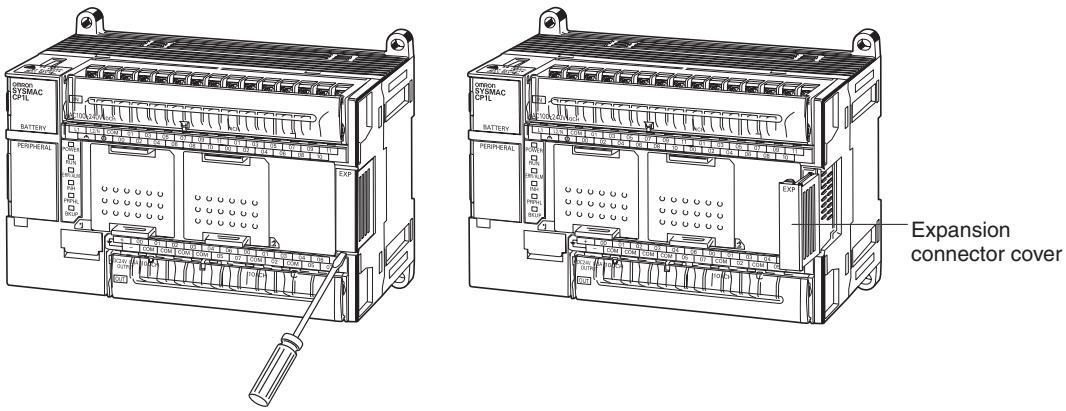

2. Insert the Expansion I/O Unit's connecting cable into the CPU Unit's or the Expansion I/O Unit's expansion connector.

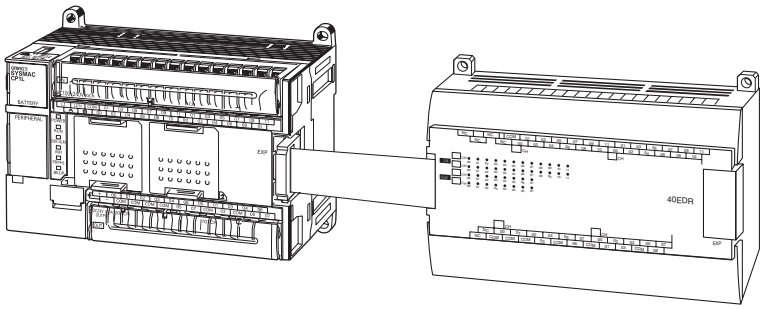

3. Replace the cover on the CPU Unit's or the Expansion I/O Unit's expansion connector.

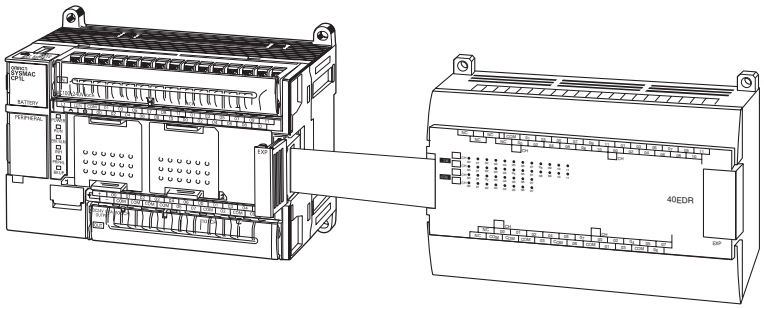

3-3-3 DIN Track Installation

1,2,3... 1. Use a screwdriver to pull down the DIN Track mounting pins from the back of the Units, and mount the Units to the DIN Track.

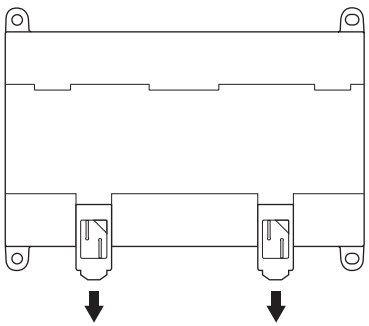

2. Lower the Units so that they catch on the top of the DIN Track, and then press them forward all the way to the DIN Track at the bottom.

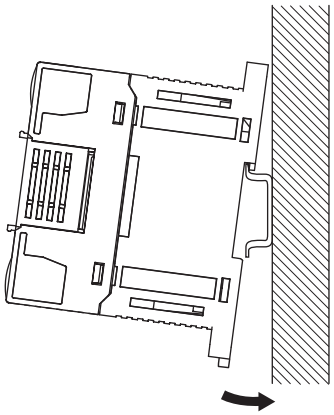

3. Press in all of the DIN Track mounting pins to securely lock the Units in place.

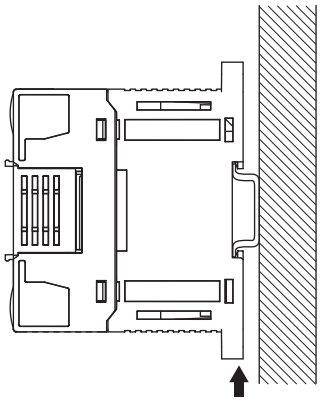

DIN Track

Mount the DIN Track in the control panel with screws in at least three places.

- DIN Track: PFP-50N (50 cm), PFP-100N (100 cm), or PFP-100N2 (100 cm)

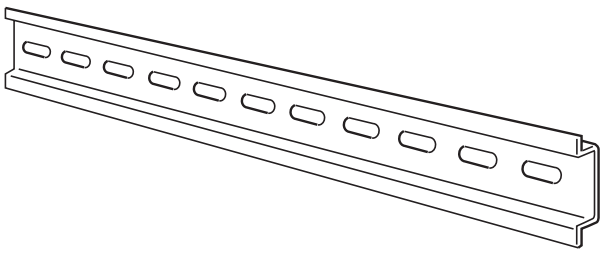

Secure the DIN Track to the control panel using M4 screws separated by 210 mm (6 holes). The tightening torque is 1.2 N·m.

PFP-100N2

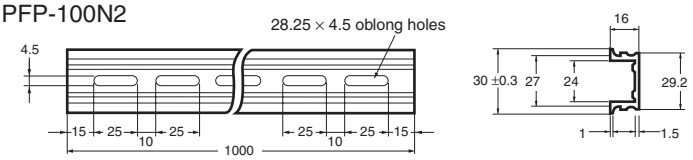

PFP-100N/50N

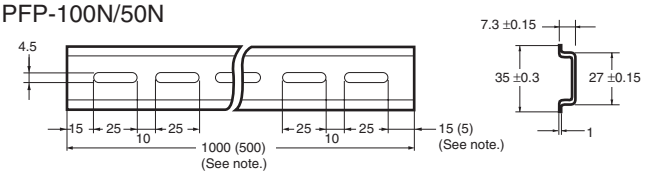

Note: PFP-50N dimensions are given in parentheses.

3-4 Wiring CP1L CPU Units

Note

(1) Do not remove the protective label from the top of the Unit until wiring has been completed. This label prevents wire strands and other foreign matter from entering the Unit during wiring procedures.

(2) Remove the label after the completion of wiring to ensure proper heat dissipation.

3-4-1 Wiring Power Supply and Ground Lines

CPU Units with AC Power Supply

Wiring the AC Power Supply and Ground Lines

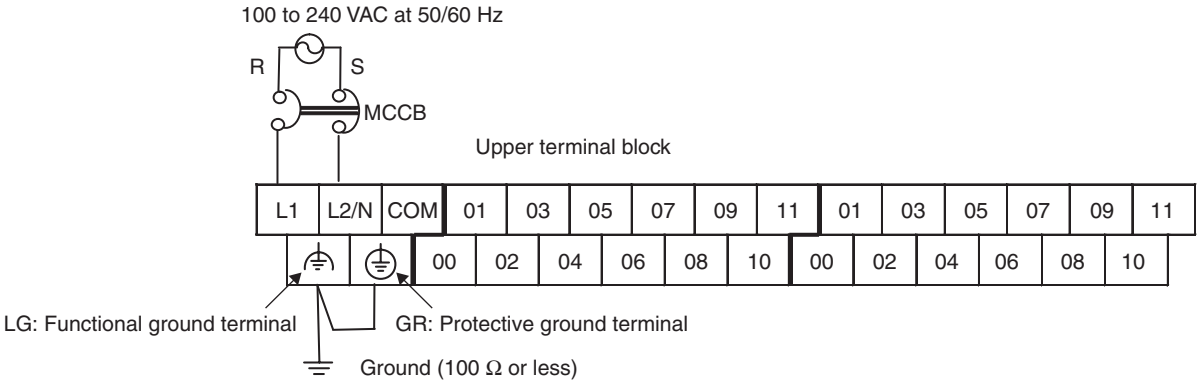

- Wire a separate circuit for the power supply circuit so that there is no voltage drop from the inrush current that flows when other equipment is turned ON.
- When several CP1L PLCs are being used, it is recommended to wire the PLCs on separate circuits to prevent a voltage drop from the inrush current or incorrect operation of the circuit breaker.
- Use twisted-pair power supply cables to prevent noise from the power supply lines. Adding a 1:1 isolating transformer reduces electrical noise even further.
- Consider the possibility of voltage drops and the allowable current, and always use thick power lines.
- Use round crimp terminals for AC power supply wiring.

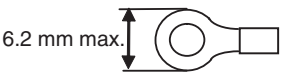

- AC Power Supply
  Provide a power supply of 100 to 240 VAC.
- Use a power supply within the following voltage fluctuation range.

Power supply voltage	Allowable voltage fluctuation range
100 to 240 VAC	85 to 264 VAC

Note

(1) Before connecting the power supply, make sure that the CPU Unit requires an AC power supply and not a DC power supply. The CPU Unit's internal circuitry will be damaged if AC power is mistakenly supplied to a CPU Unit that requires a DC power supply.

(2) The power supply input terminals are at the top of the CPU Unit; the terminals at the bottom of the CPU Unit output 24-VDC power for external devices. The CPU Unit's internal circuitry will be damaged if AC power is mistakenly supplied to a CPU Unit's power supply output terminals.

⚠ **Caution** Tighten the terminal block screws for the AC power supply to the torque of 0.5 N·m. Loose screws may result in fire or malfunction.

- Always ground the ground terminal to 100 Ω or less to protect against electric shock and incorrect operation from electrical noise.

- If one phase of the power supply is grounded, connect the grounded phase to the L2/N terminal.
- The GR terminal is a ground terminal. To prevent electrical shock, use a dedicated ground line (2 mm^2 min.) of 100 Ω or less.
- The line ground terminal (LG) is a noise-filtered neutral terminal. If noise is a significant source of errors or if electrical shocks are a problem, connect the line ground terminal (LG) to the ground terminal (GR) and ground both with a ground resistance of 100 Ω or less.
- To prevent electrical shock when short-circuiting between the LG and GR terminals, always use a ground of 100 Ω or less.
- Do not connect ground lines to other devices or to the frame of a building. Doing so will reverse the effectiveness of the ground and instead have a bad influence.

Isolating Transformer

The PLC's internal noise control is sufficient for the general noise to which power supply lines are subjected. Ground noise can be further reduced by providing the power supply through a 1:1 isolating transformer. Leave the isolating transformer's secondary side ungrounded.

CPU Units with DC Power Supply

DC Power Supply Wiring

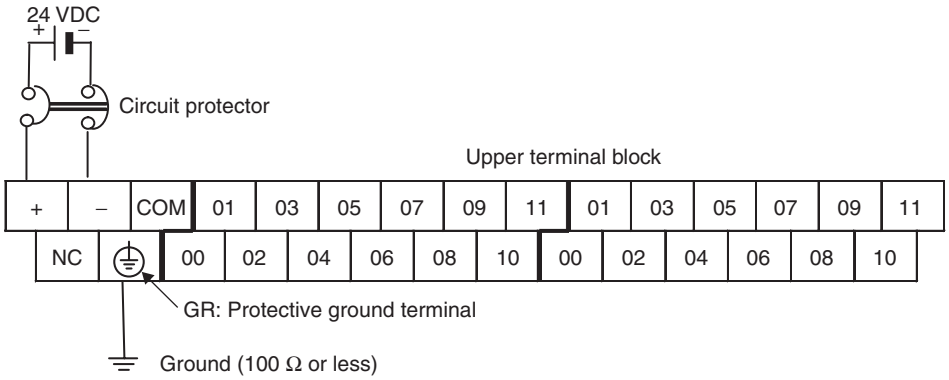

- Use crimp terminals or solid wire for wiring the power supply. Do not connect bare stranded wires directly to terminals.

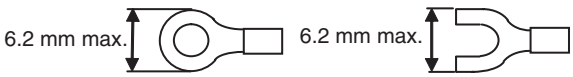

- M3 self-rising terminal screws are used. Tighten the terminal screws to the torque of 0.5 N·m.
- To prevent noise, use a ground of 100 Ω or less.

DC Power Supply

- Provide a power supply of 20.4 to 26.4 VDC.
- The maximum current consumption is 20 W for CPU Units with 30, 40 or 60 I/O points and 13 W for CPU Units with 10, 14 or 20 I/O points.
- When the power supply is turned ON, the inrush current is approximately five times the normal current.
- The GR terminal is a ground terminal. To prevent electrical shock, use a dedicated ground line (2 mm^2 min.) of 100 Ω or less.

Note (1) Never reverse the positive and negative leads when wiring the power supply terminals.

(2) Supply all power to the power supply terminals from the same source.

3-4-2 Wiring Built-in I/O

Wiring Precautions

Double-checking I/O Specifications

Double-check the specifications for the I/O Units. In particular, do not apply a voltage that exceeds the input voltage for Input Units or the maximum switching capacity for Output Units. Doing so may result in breakdown, damage, or fire.

When the power supply has positive and negative terminals, always wire them correctly.

Electric Wires

- AWG22 to AWG18 (0.32 to 0.82 mm^2) power lines are recommended. Use cable with a maximum diameter of 1.61 mm including the insulation covering.
- The current capacity of electric wire depends on factors such as the ambient temperature and insulation thickness, as well as the gauge of the conductor.
- M3 self-rising screws are used for all screw terminals including terminal screws for crimp terminal power supply wiring.
- Use crimp terminals or solid wire for wiring.
- Do not connect bare stranded wires directly to terminals.
- Tighten the terminal block screws to the torque of 0.5 N·m.
- Use crimp terminals (M3) having the dimensions shown below.

Wiring

- Wire the Units so that they can be easily replaced.
- Make sure that the I/O indicators are not covered by the wiring.
- Do not place the I/O wiring in the same conduits or ducts as high-voltage or power lines. Inductive noise can cause errors or damage.
- Tighten the terminal screws to the torque of 0.5 N·m.

Note

(1) Never apply a voltage that exceeds the input voltage for Input Units or the maximum switching capacity for Output Units.

(2) When the power supply has positive and negative terminals, always wire them correctly.

(3) When required by EC Low Voltage Directive, use reinforced insulation or double insulation on the DC power supply connected to DC-power-supply CPU Units and I/O.
For the DC power supply connected to a DC-power-supply CPU Unit, use a power supply with a minimum output holding time of 10 ms.

(4) Do not pull on the cables or bend the cables beyond their natural limit. Doing either of these may break the cables.

Connecting I/O Devices

Use the following information for reference when selecting or connecting input devices.

DC Input Devices

Connectable DC Input Devices (for DC Output Models)

Contact output

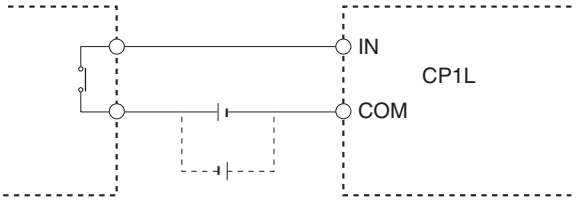

Two-wire DC output

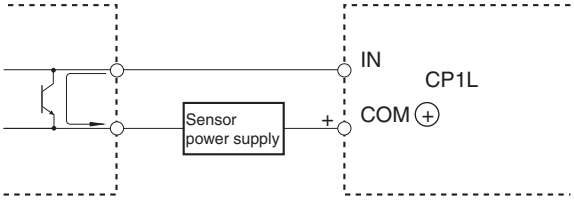

NPN open-collector output

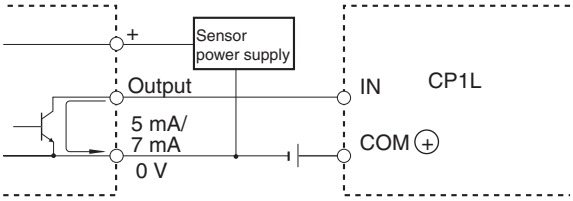

NPN current output

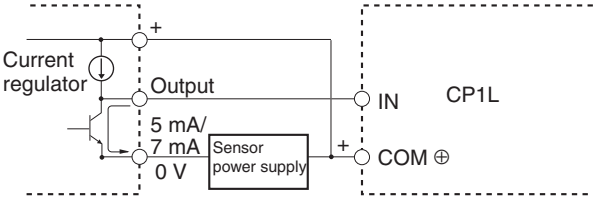

PNP current output

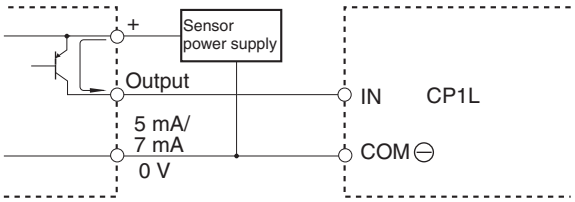

Voltage output

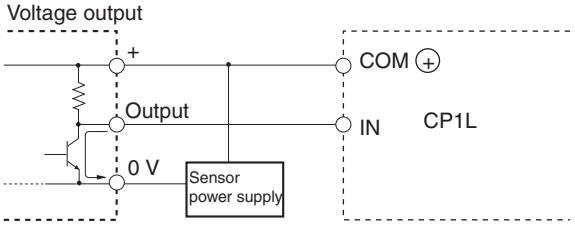

- The circuit below should not be used for I/O devices with a voltage output.

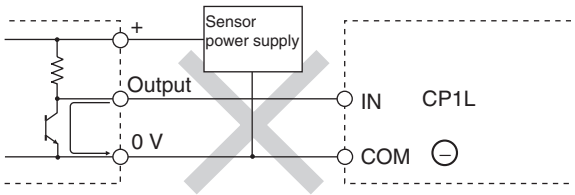

Precautions when Connecting a Two-wire DC Sensor

When using a two-wire sensor with a 24-V DC input device, check that the following conditions have been met. Failure to meet these conditions may result in operating errors.

1,2,3...

1. Relation between voltage when the PLC is ON and the sensor residual voltage:
   $V_{ON} \leq V_{CC} - V_R$
2. Relation between current when the PLC is ON and sensor control output (load current):
   I_{OUT} (min) $\leq I_{ON} \leq I_{OUT}$ (max)
   $I_{ON} = (V_{CC} - V_R - 1.5$ [PLC internal residual voltage]*$)/R_{IN}$
   When I_{ON} is smaller than I_{OUT} (min), connect a bleeder resistor R. The bleeder resistor constant can be calculated as follows:
   $R \leq (V_{CC} - V_R)/(I_{OUT}$ (min) $- I_{ON})$
   Power $W \geq (V_{CC} - V_R)^2/R \times 4$ [allowable margin]

3. Relation between current when the PLC is OFF and sensor leakage current:
   $I_{OFF} \geq I_{leak}$
   Connect a bleeder resistor if I_{leak} is greater than I_{OFF}. Use the following equation to calculate the bleeder resistance constant.
   $R \leq R_{IN} \times V_{OFF}/(I_{leak} \times R_{IN} - V_{OFF})$
   Power $W \geq (V_{CC} - V_R)^2/R \times 4$ (allowable margin)

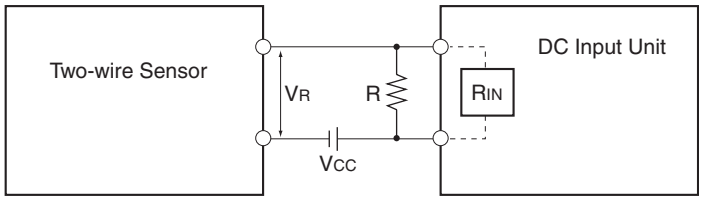

Vcc: Power voltage
Von: PLC ON voltage
Voff: PLC OFF voltage
Ion: PLC ON current
Ioff: PLC OFF current
Rin: PLC input impedance
Vr: Sensor output residual current
Iout: Sensor control output (load current)
Ileak: Sensor leakage current
R: Bleeder resistance

4. Precautions on Sensor Inrush Current
   An incorrect input may occur due to sensor inrush current if a sensor is turned ON after the PLC has started up to the point where inputs are possible. Determine the time required for sensor operation to stabilize after the sensor is turned ON and take appropriate measures, such as inserting into the program a timer delay after turning ON the sensor.

Program Example

In this example, the sensor's power supply voltage is provided to input bit CIO 0.00 and a 100-ms timer delay (the time required for an OMRON Proximity Sensor to stabilize) is created in the program. After the Completion Flag for the timer turns ON, the sensor input on input bit CIO 0.01 will cause output bit CIO 100.00 to turn ON.

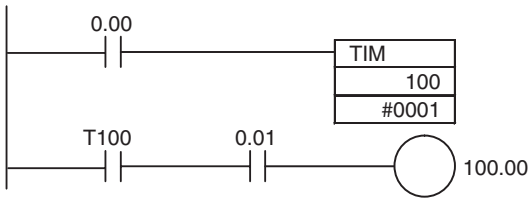

Output Wiring Precautions

Output Short-circuit Protection

If a load connected to the output terminals is short-circuited, output components and the printed circuit boards may be damaged. To guard against this, incorporate a fuse in the external circuit. Use a fuse with a capacity of about twice the rated output.

Connecting to a TTL Circuit

A TTL circuit cannot be connected directly to a transistor output because of the transistor's residual voltage. It is necessary to connect a pull-up resistor and a CMOS IC between the two.

Inrush Current Considerations

When connecting a transistor or triac output to a load having a high inrush current (such as an incandescent lamp), steps must be taken to avoid damage to the transistor or triac. Use either of the following methods to reduce the inrush current.

Example Method 1

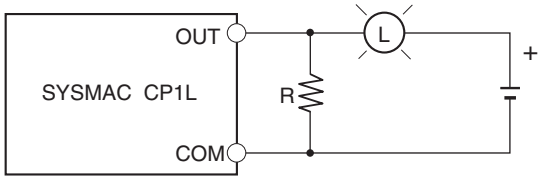

Use a dark current of approximately 1/3 the rated current of the incandescent lamp.

Example Method 2

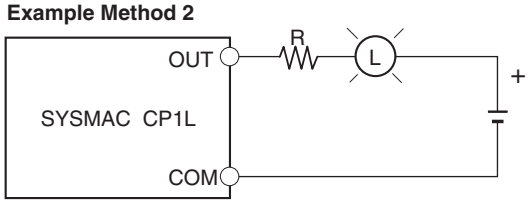

Install a limit resistance.

3-4-3 Wiring Safety and Noise Controls

I/O Signal Wiring

Whenever possible, place I/O signal lines and power lines in separate ducts or conduits both inside and outside of the control panel.

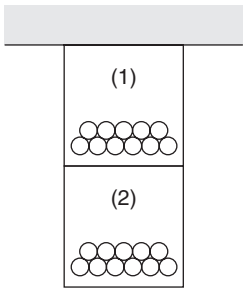

Suspended duct

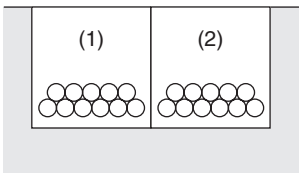

In-floor duct

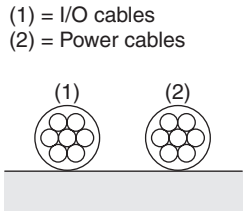

Conduits

If the I/O wiring and power wiring must be routed in the same duct, use shielded cables and connect the shields to the GR terminal to reduce noise.

Inductive Loads

When an inductive load is connected to an I/O Unit, connect a surge suppressor or diode in parallel with the load as shown below.

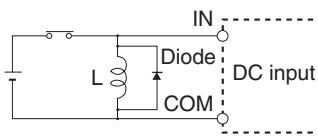

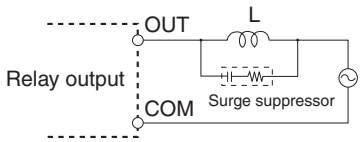

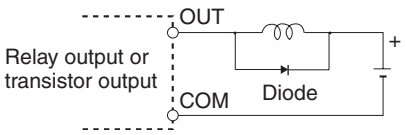

Note Use surge suppressors and diodes with the following specifications.

Surge Suppressor Specifications

Resistance: 50 Ω
Capacitance: 0.47μF
Voltage: 200 V

Diode Specifications

Breakdown voltage: 3 times load voltage min.
Mean rectification current: 1 A

Noise from External Wiring

Take the following points into account when externally wiring I/O, power supply, and power lines.

- When multi-conductor signal cable is being used, avoid combining I/O wires and other control wires in the same cable.
- If wiring racks are parallel, allow at least 300 mm between them.

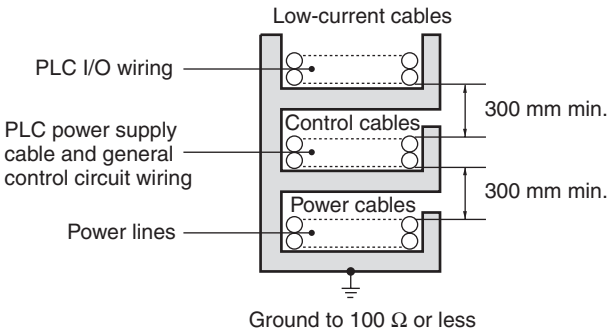

- If the I/O wiring and power cables must be placed in the same duct, they must be shielded from each other using grounded steel sheet metal.

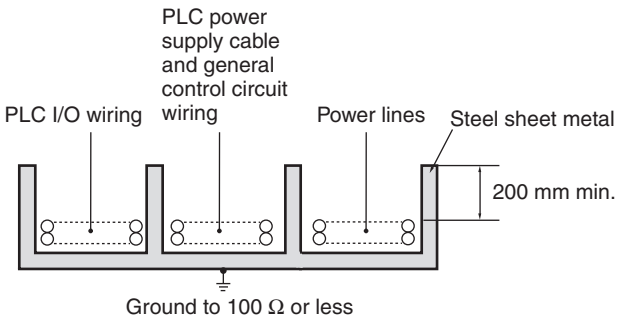

3-5 Wiring CPU Unit I/O

3-5-1 I/O Wiring for CPU Units with 60 I/O Points

Input Wiring (Upper Terminal Block, Removable)

The input circuits have 36 points/common. Use power lines with sufficient current capacity for the COM terminals.

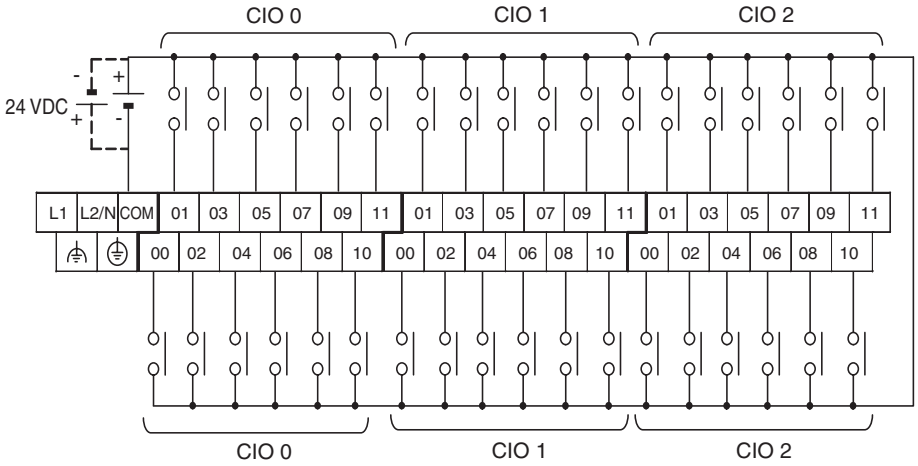

Output Wiring (Lower Terminal Block, Removable)

Relay Outputs (CP1L-M60DR-A and CP1L-M60DR-D)

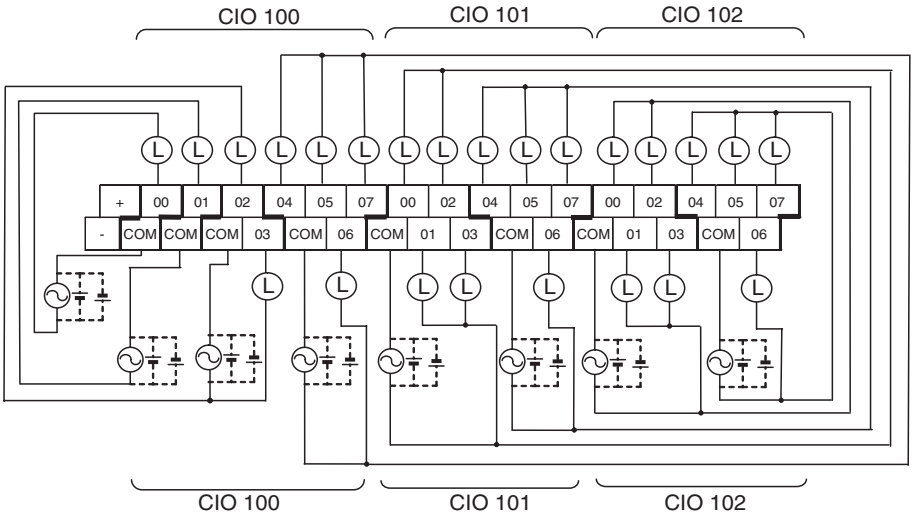

AC-power-supply models have a 24-VDC output terminals (+/−) on the lower terminal block. They can be used as a DC power supply for the input circuit.

Sinking Transistor Outputs (CP1L-M60DT-A and CP1L-M60DT-D)

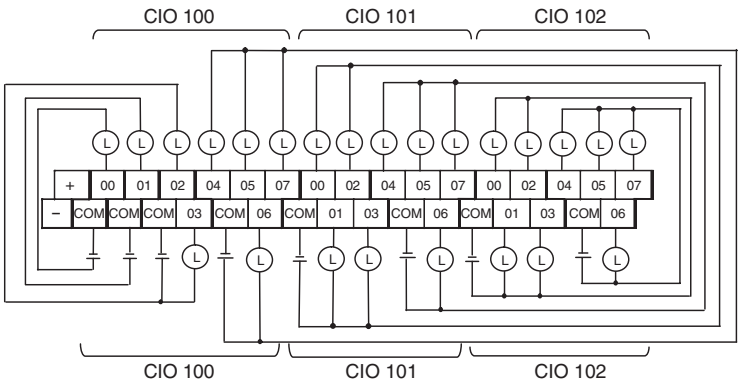

AC-power-supply models have a 24-VDC output terminals (+/–) on the lower terminal block. They can be used as a DC power supply for the input circuit.

Sourcing Transistor Outputs (CP1L-M60DT1-D)

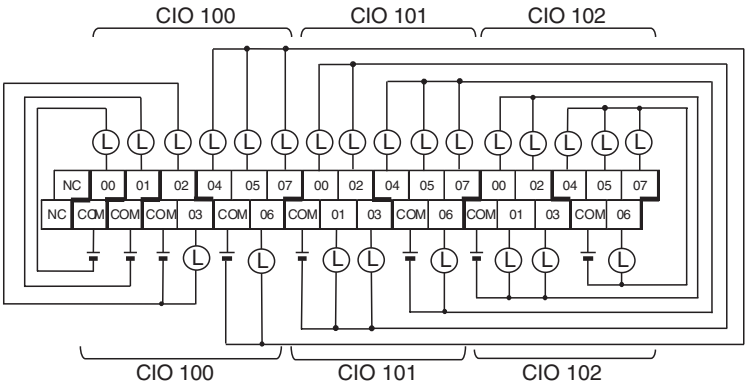

3-5-2 I/O Wiring for CPU Units with 40 I/O Points

Input Wiring (Upper Terminal Block, Removable)

The input circuits have 24 points/common. Use power lines with sufficient current capacity for the COM terminals.

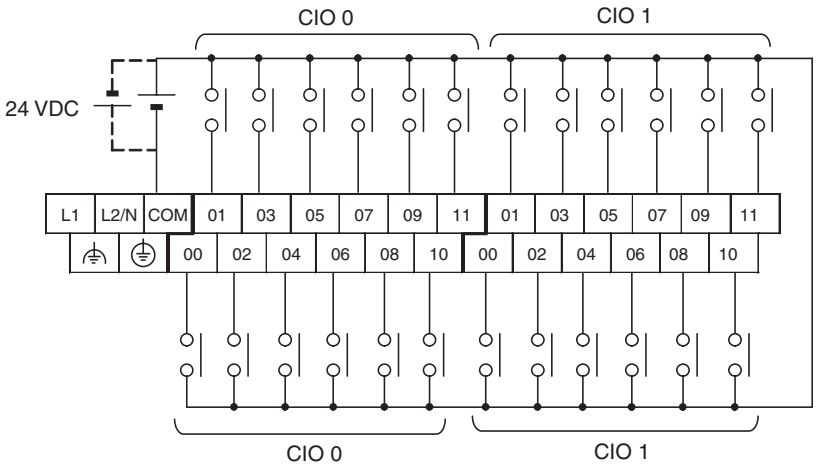

Output Wiring (Lower Terminal Block, Removable)

Relay Outputs (CP1L-M40DR-A and CP1L-M40DR-D)

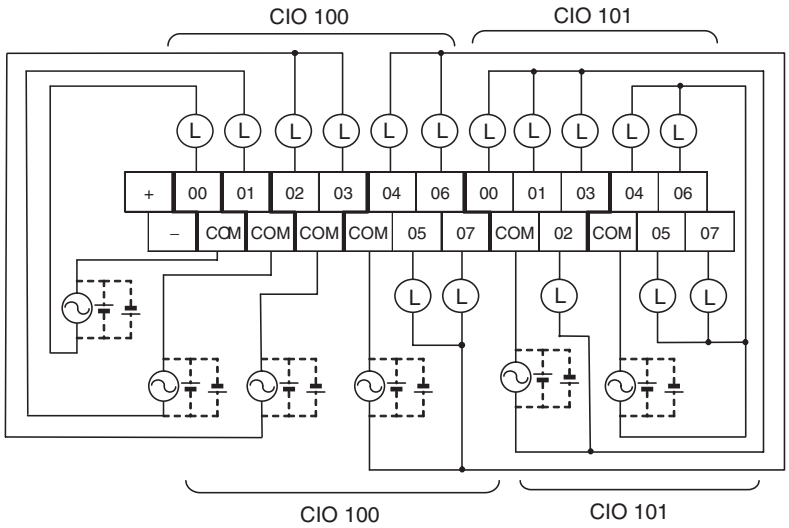

AC-power-supply models have a 24-VDC output terminals (+/–) on the lower terminal block. They can be used as a DC power supply for the input circuit.

Sinking Transistor Outputs (CP1L-M40DT-A and CP1L-M40DT-D)

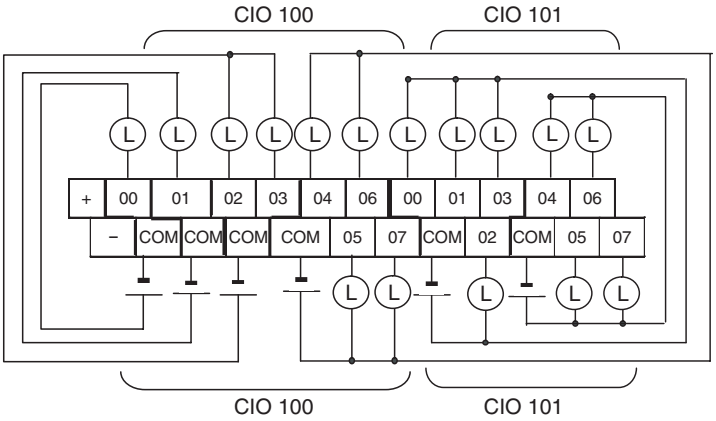

AC-power-supply models have a 24-VDC output terminals (+/–) on the lower terminal block. They can be used as a DC power supply for the input circuit.

Sourcing Transistor Outputs (CP1L-M40DT1-D)

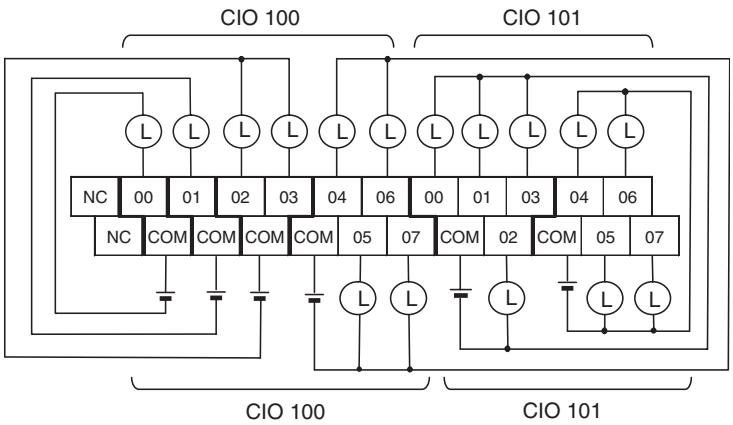

3-5-3 I/O Wiring for CPU Units with 30 I/O Points

Input Wiring (Upper Terminal Block, Removable)

The input circuits have 18 points/common. Use power lines with sufficient current capacity for the COM terminals.

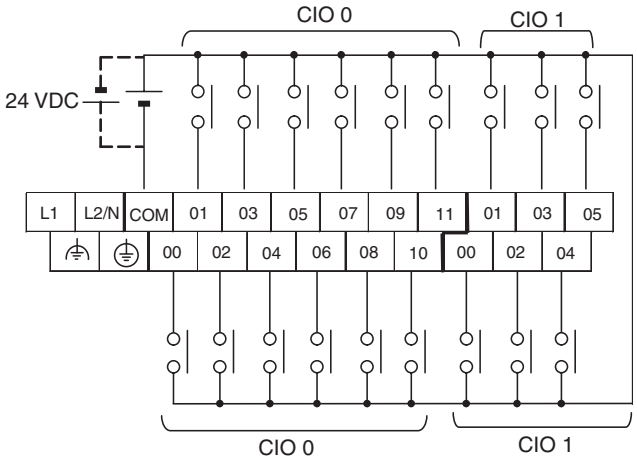

Output Wiring (Lower Terminal Block, Removable)

Relay Outputs (CP1L-M30DR-A and CP1L-M30DR-D)

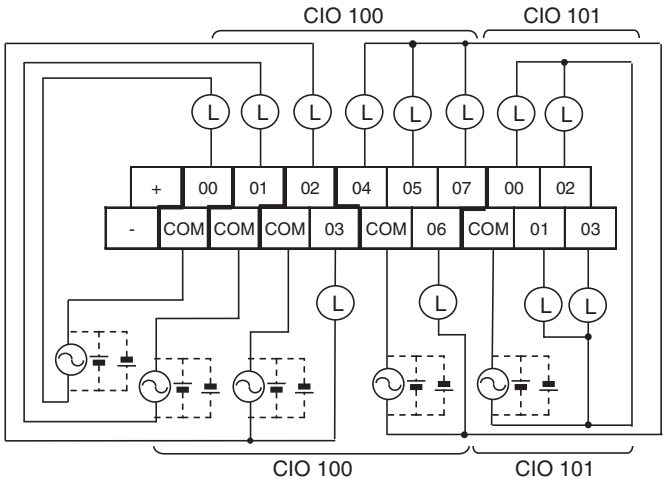

AC-power-supply models have a 24-VDC output terminals (+/−) on the lower terminal block. They can be used as a DC power supply for the input circuit.

Sinking Transistor Outputs (CP1L-M30DT-A and CP1L-M30DT-D)

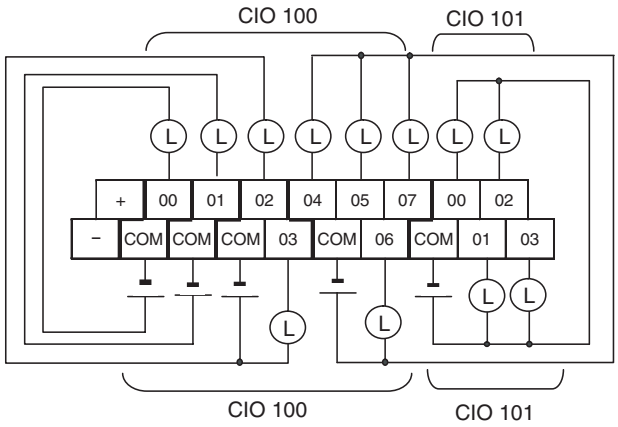

AC-power-supply models have a 24-VDC output terminals (+/−) on the lower terminal block. They can be used as a DC power supply for the input circuit.

Sourcing Transistor Outputs (CP1L-M30DT1-D)

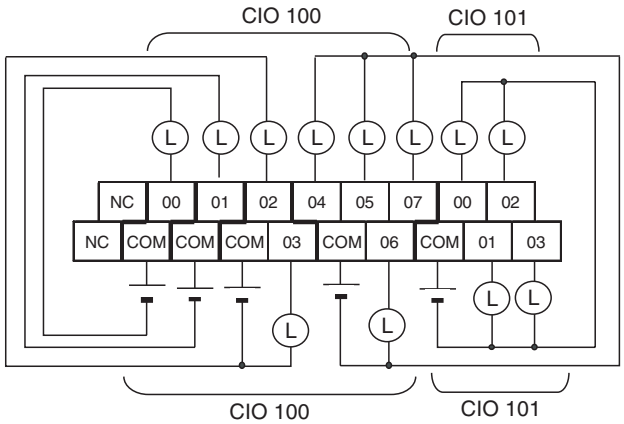

3-5-4 I/O Wiring for CPU Units with 20 I/O Points

Input Wiring (Upper Terminal Block, not Removable)

The input circuits have 12 points/common. Use power lines with sufficient current capacity for the COM terminals.

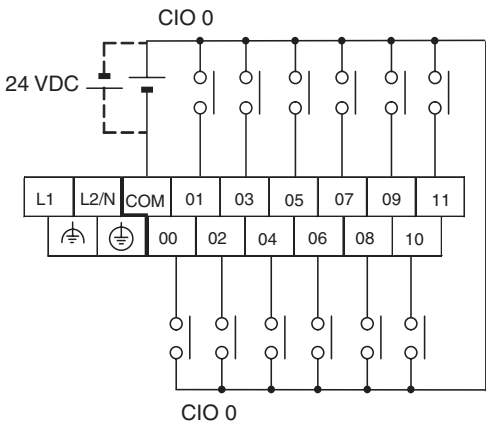

Output Wiring (Lower Terminal Block, not Removable)

Relay Outputs (CP1L-L20DR-A and CP1L-L20DR-D)

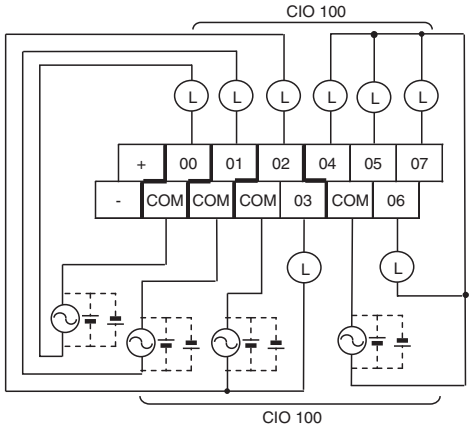

AC-power-supply models have a 24-VDC output terminals (+/−) on the lower terminal block. They can be used as a DC power supply for the input circuit.

Sinking Transistor Outputs (CP1L-L20DT-A and CP1L-L20DT-D)

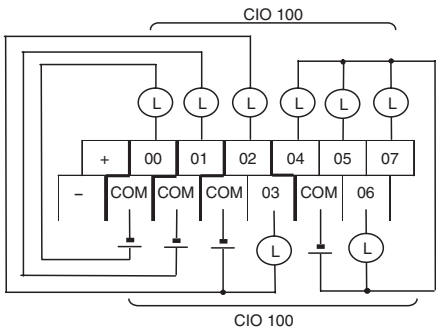

AC-power-supply models have a 24-VDC output terminals (+/−) on the lower terminal block. They can be used as a DC power supply for the input circuit.

Sourcing Transistor Outputs (CP1L-L20DT1-D)

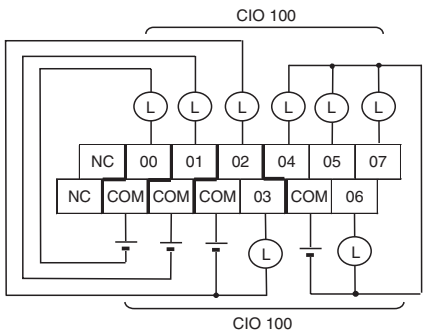

3-5-5 I/O Wiring for CPU Units with 14 I/O Points

Input Wiring (Upper Terminal Block, not Removable)

The input circuits have 8 points/common. Use power lines with sufficient current capacity for the COM terminals.

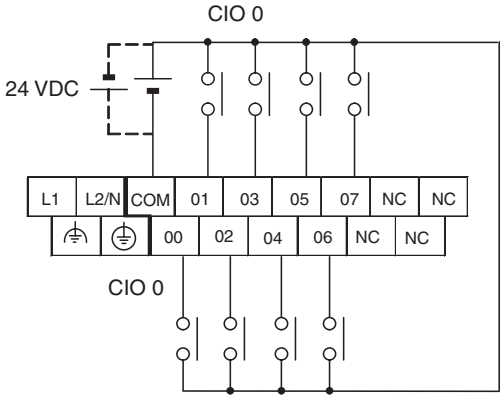

Output Wiring (Lower Terminal Block, not Removable)

Relay Outputs (CP1L-L14DR-A and CP1L-L14DR-D)

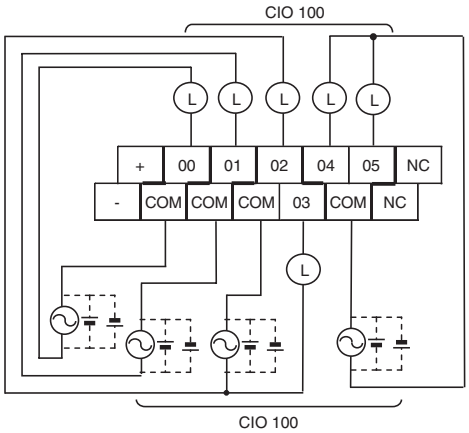

AC-power-supply models have a 24-VDC output terminals (+/−) on the lower terminal block. They can be used as a DC power supply for the input circuit.

Sinking Transistor Outputs (CP1L-L14DT-A and CP1L-L14DT-D)

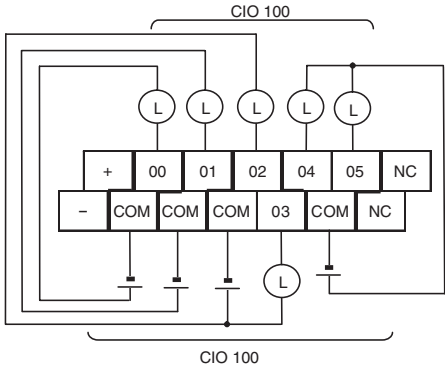

AC-power-supply models have a 24-VDC output terminals (+/–) on the lower terminal block. They can be used as a DC power supply for the input circuit.

Sourcing Transistor Outputs (CP1L-L14DT1-D)

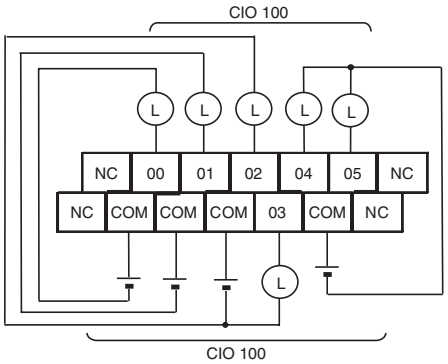

3-5-6 I/O Wiring for CPU Units with 10 I/O Points

Input Wiring (Upper Terminal Block, not Removable)

The input circuits have 6 points/common. Use power lines with sufficient current capacity for the COM terminals.

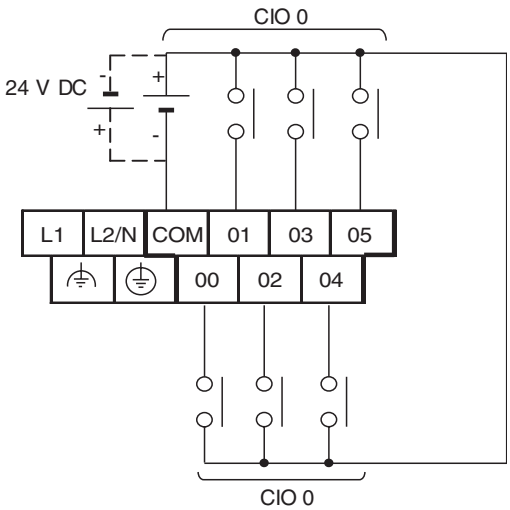

Output Wiring (Lower Terminal Block, not Removable)

Relay Outputs (CP1L-L10DR-A and CP1L-L10DR-D)

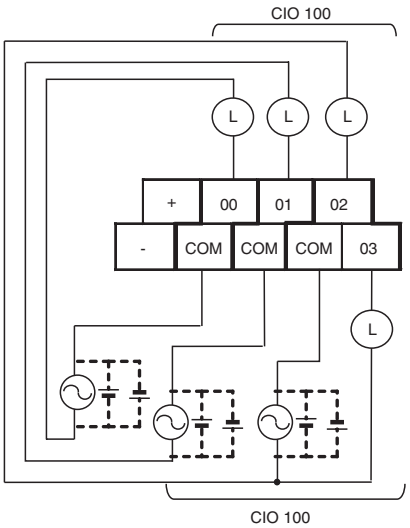

AC-power-supply models have a 24-VDC output terminals (+/−) on the lower terminal block. They can be used as a DC power supply for the input circuit.

Sinking Transistor Outputs (CP1L-L10DT-A and CP1L-L10DT-D)

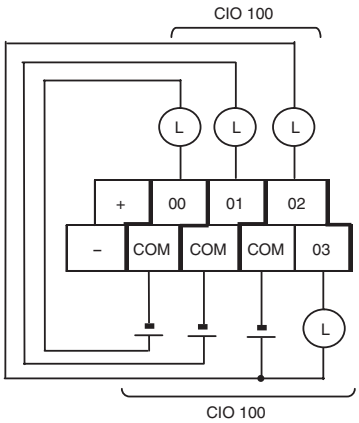

AC-power-supply models have a 24-VDC output terminals (+/−) on the lower terminal block. They can be used as a DC power supply for the input circuit.

Sourcing Transistor Outputs (CP1L-L10DT1-D)

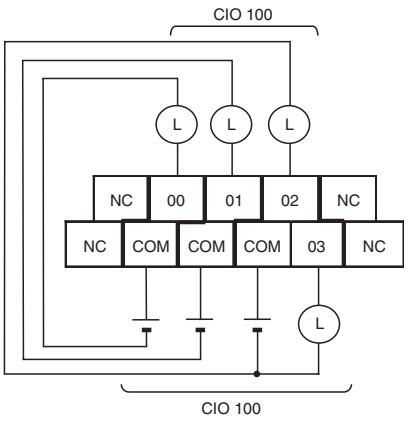

3-5-7 Pulse Input Connection Examples

For a 24-VDC Open-collector Encoder

This example shows the connections to an encoder with phase-A, phase-B, and phase Z inputs.

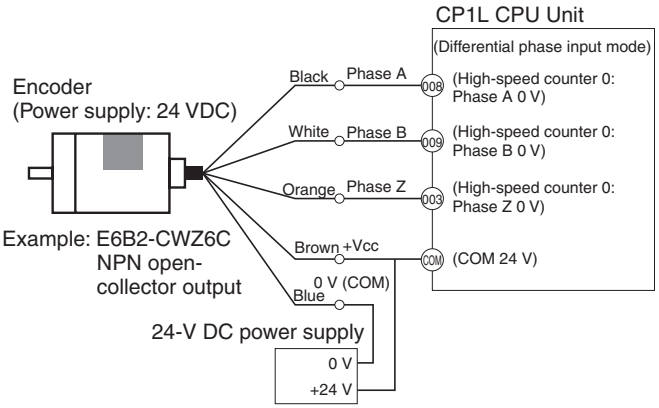

(Do not use the same I/O power supply as other equipment.)

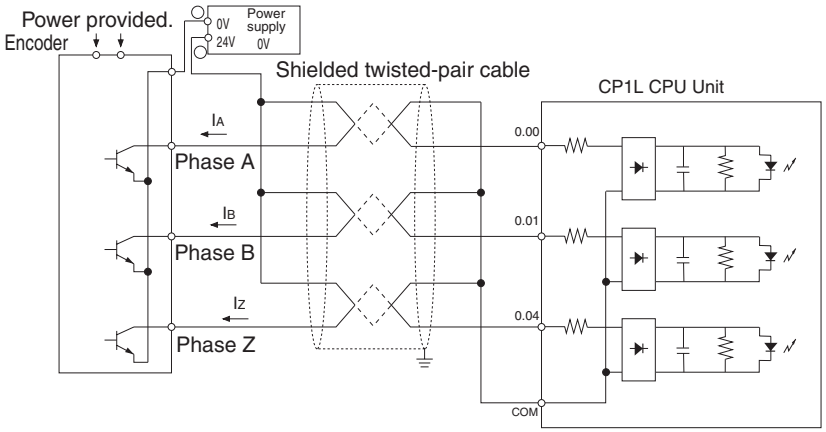

3-5-8 Pulse Output Connection Examples

This example shows a connection to a motor driver. Always check the specifications of the motor driver before actually connecting it.

For open-collector output, use a maximum of 3 m of wiring between the CP1L CPU Unit and the motor driver.

No pulses are output while the pulse output transistor is OFF. For a direction output, OFF indicates that CCW output is in progress.

Do not use the same power supply for both pulse output 24-VDC/5-VDC power and other I/O power.

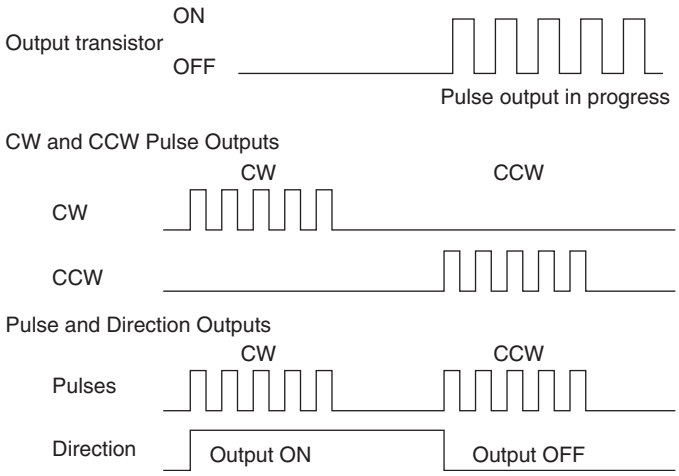

CW/CCW Pulse Output and Pulse Plus Direction Output

Using a 24-VDC Photocoupler Input Motor Driver (CP1L-□□□DT-D)

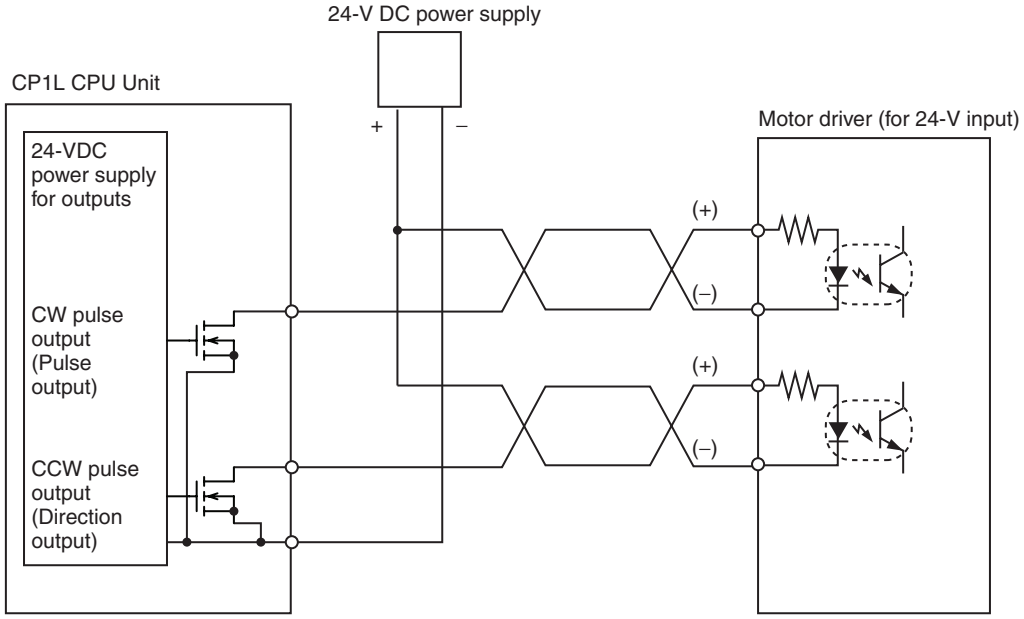

Using a 5-VDC Photocoupler Input Motor Driver (CP1L-□□□DT-D)

Connection Example 1

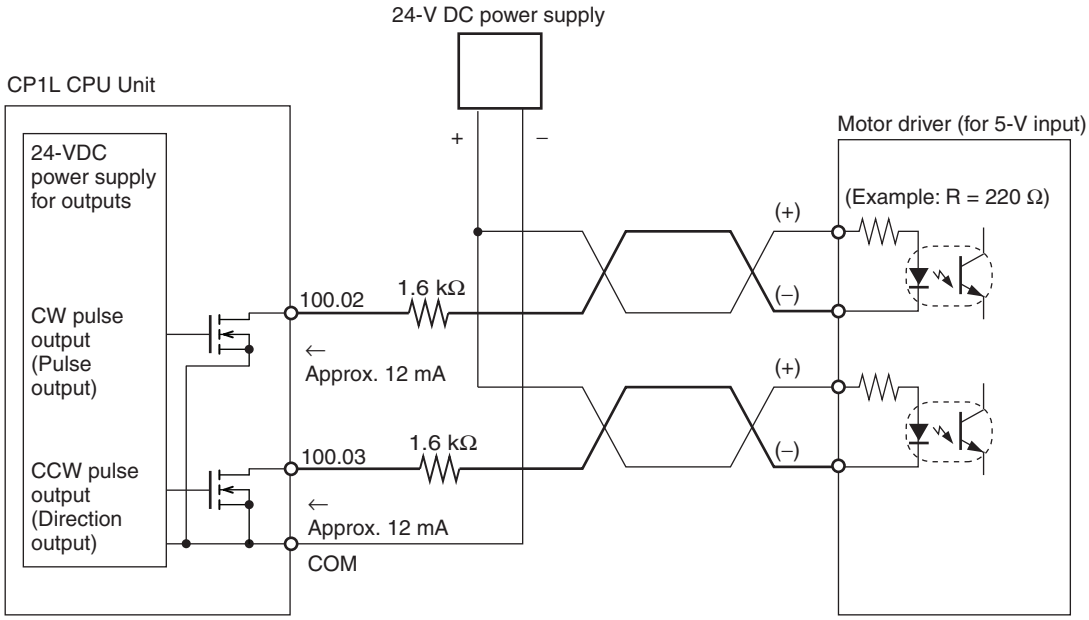

In this example, a 5-V input motor driver is used with a 24-VDC power supply. Be careful to ensure that the Position Control Unit output current does not damage the input circuit at the motor driver and yet is sufficient to turn it ON.

Take into account the power derating for the 1.6-kΩ resistance.

Connection Example 2

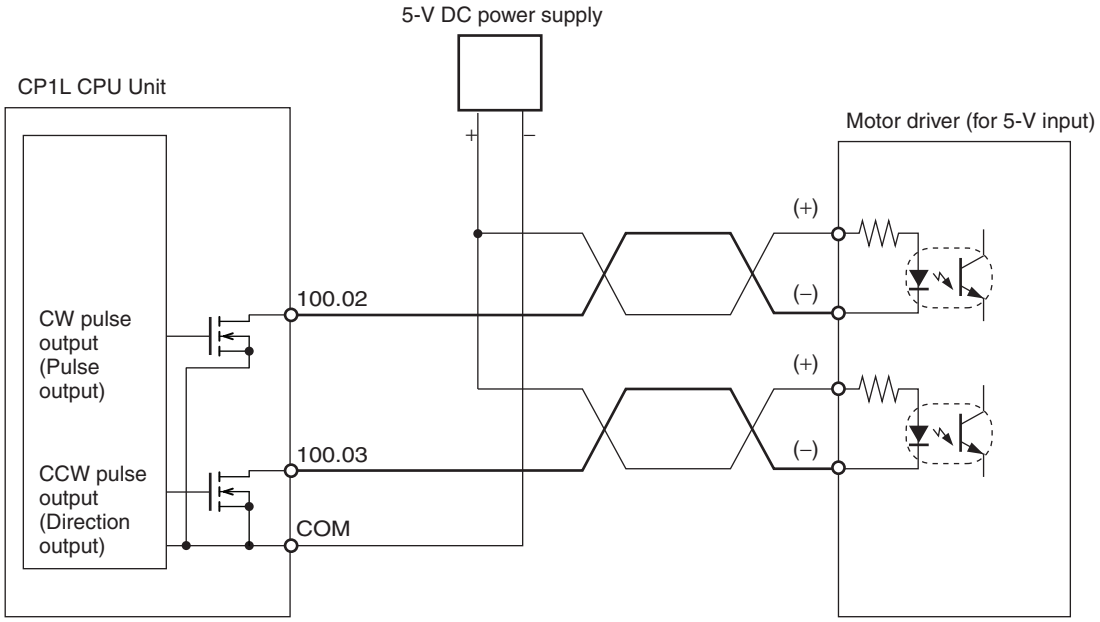

3-6 CP/CPM1A-series Expansion I/O Unit Wiring

CP-series Expansion I/O Units

	Model	Inputs	Outputs
40-point I/O Units	CP1W-40EDR CPM1A-40EDR	24 24-VDC inputs	16 relay outputs
	CP1W-40EDT CPM1A-40EDT		16 transistor outputs (sinking)
	CP1W-40EDT1 CPM1A-40EDT1		16 transistor outputs (sourcing)
32-point Output Units	CP1W-32ER	None	32 relay outputs
	CP1W-32ET		32 transistor outputs (sinking)
	CP1W-32ET1		32 transistor outputs (sourcing)
20-point I/O Units	CP1W-20EDT1 CPM1A-20EDR1	12 24-VDC inputs	8 relay outputs
	CP1W-20EDT CPM1A-20EDT		8 transistor outputs (sinking)
	CP1W-20EDT1 CPM1A-20EDT1		8 transistor outputs (sourcing)
16-point Output Units	CP1W-16ER CPM1A-16ER	None	16 relay outputs
	CP1W-16ET		16 transistor outputs (sinking)
	CP1W-16ET1		16 transistor outputs (sourcing)
8-point Input Units	CP1W-8ED CPM1A-8ED	8 24-VDC inputs	None
8-point Output Units	CP1W-8ER CPM1A-8ER	None	8 relay outputs
	CP1W-8ET CPM1A-8ET		8 transistor outputs (sinking)
	CP1W-8ET1 CPM1A-8ET1		8 transistor outputs (sourcing)

For details on wiring Expansion Units, refer to *SECTION 7 Using Expansion Units and Expansion I/O Units*.

40-point I/O Units (CP1W/CPM1A-40ED□□) (Terminal Block is not Removable)

Input Wiring

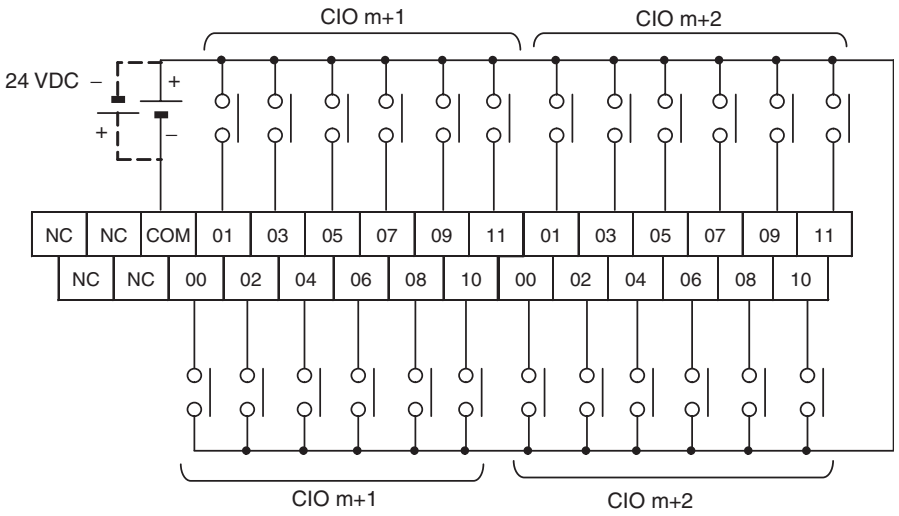

Output Wiring

CP1W-40EDR/CPM1A-40EDR (Relay Outputs)

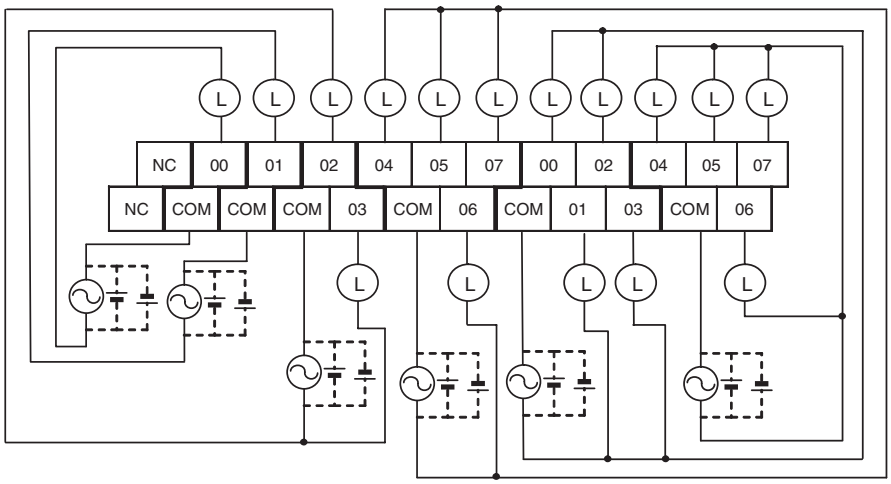

CP1W-40EDT/CPM1A-40EDT (Sinking Transistor Outputs)

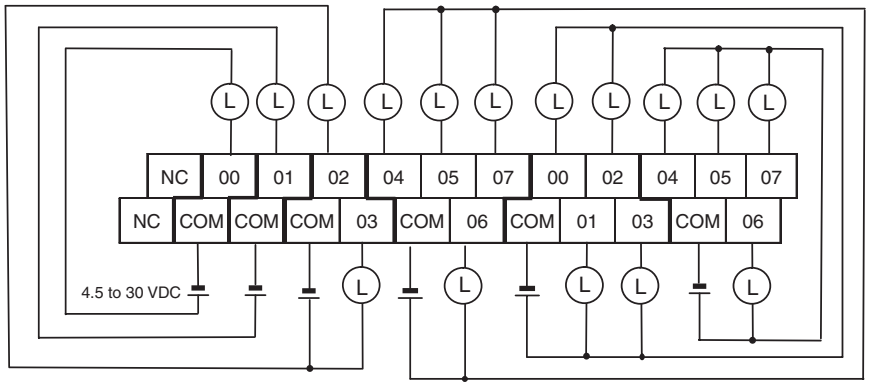

CP1W-40EDT1/CP1A-40EDT1 (Sourcing Transistor Outputs)

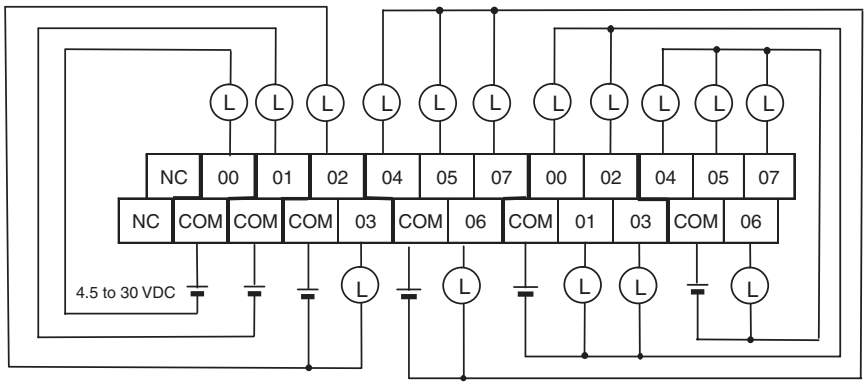

32-point Output Units (CP1W-32E□□) (Terminal Block is not Removable)

Output Wiring **CP1W-32ER (Relay Outputs)**

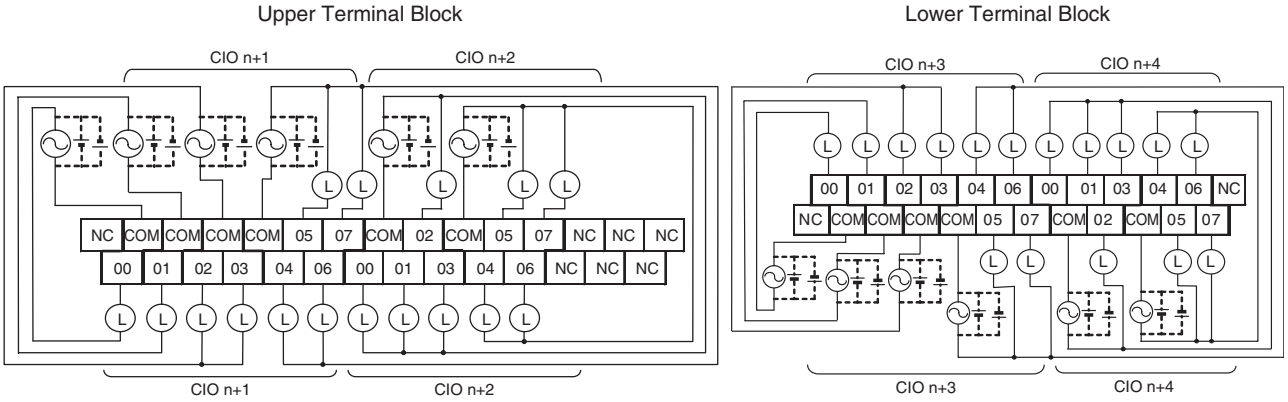

Output Wiring **CP1W-32ET (Sinking Transistor Outputs)**

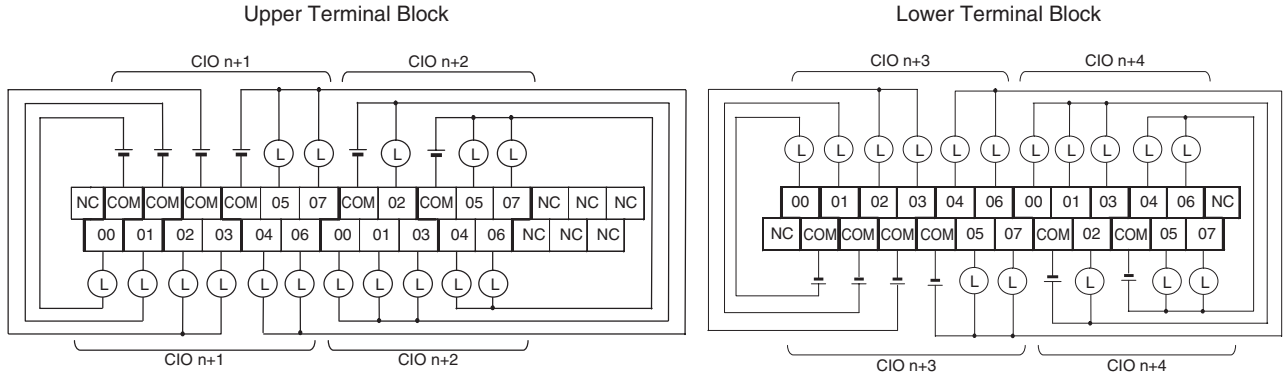

Output Wiring **CP1W-32ET1 (Sourcing Transistor Outputs)**

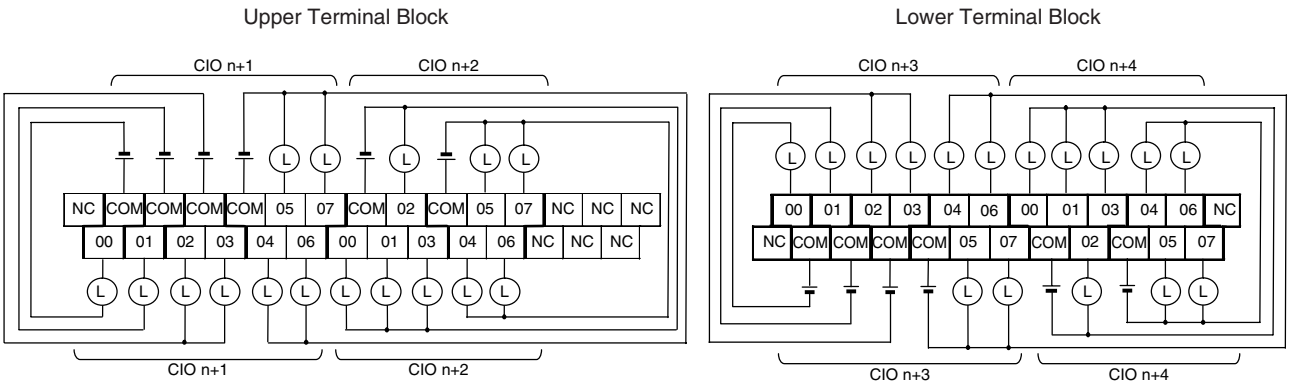

20-point I/O Units (CP1W/CPM1A-20ED□□) (Terminal Block is not Removable)

Input Wiring

CP1W-20ED□□/CPM1A-20ED□□

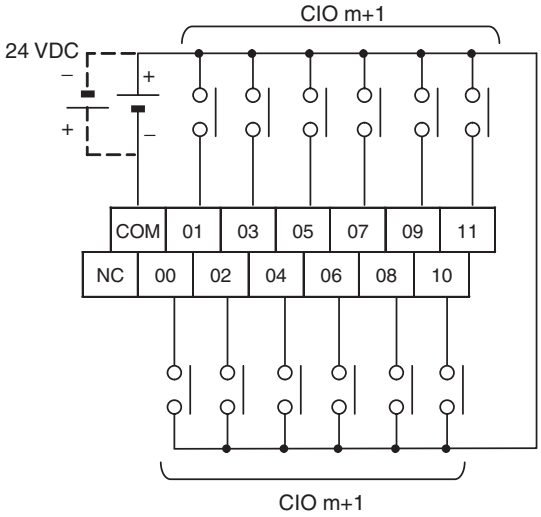

Output Wiring

CP1W-20EDR1/CPM1A-20EDR1 (Relay Outputs)

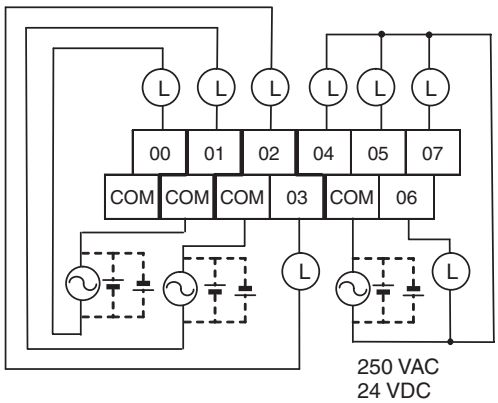

CP1W-20EDT/CPM1A-20EDT (Sinking Transistor Outputs)

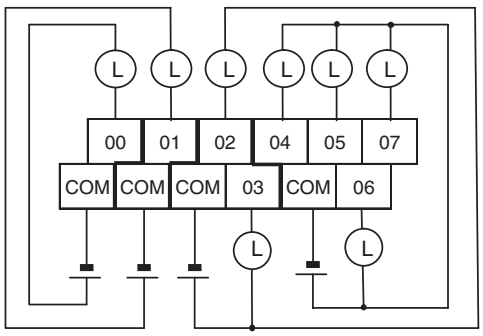

CP1W-20EDT1/CP1A-20EDT1 (Sourcing Transistor Outputs)

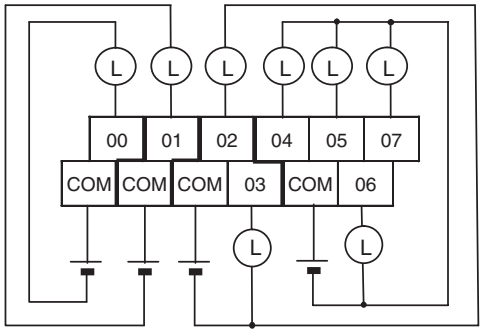

16-point Output Units (CP1W/CPM1A-16E□□) (Terminal Block is not Removable)

Output Wiring **CP1W-16ER/CPM1A-16ER (Relay Outputs)**

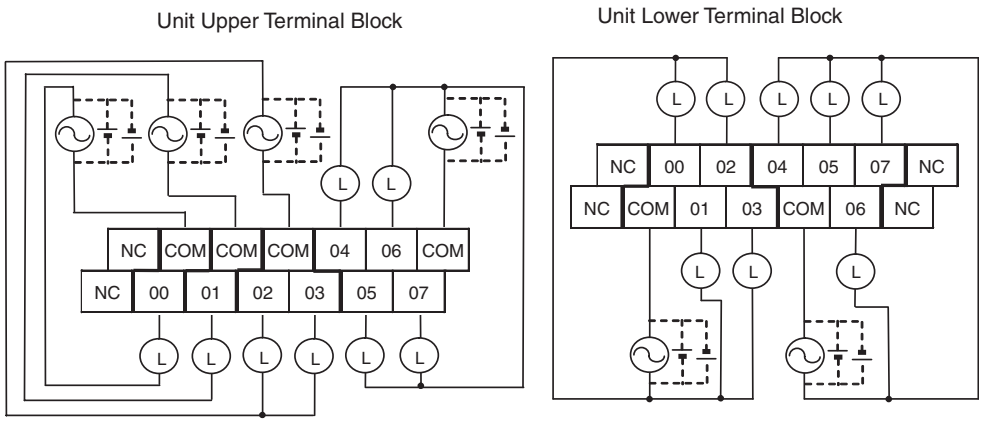

Output Wiring **CP1W-16ET (Sinking Transistor Outputs)**

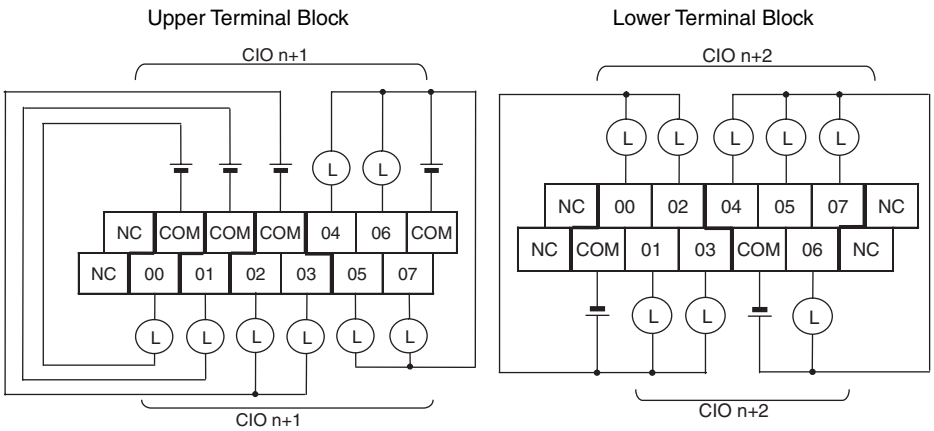

Output Wiring **CP1W-16ET1 (Sourcing Transistor Outputs)**

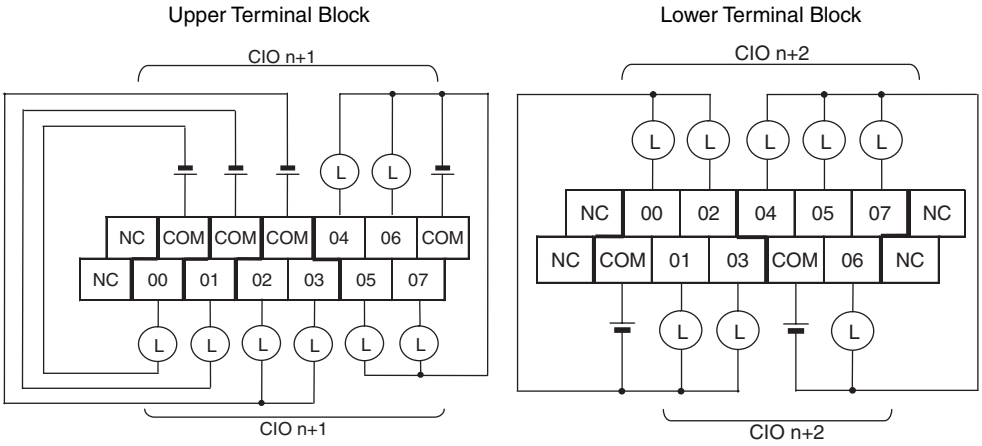

8-point Input Units (CP1W/CPM1A-8ED) (Terminal Block is not Removable)

Input Wiring

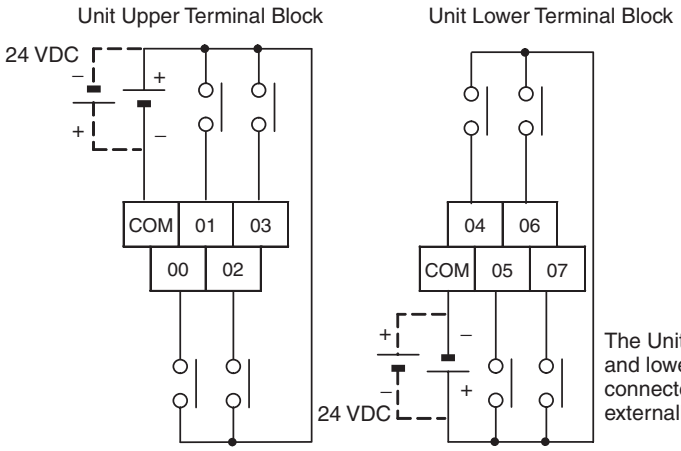

The Unit's upper terminal block COM and lower terminal block COM are connected internally, but connect them externally as well.

8-point Output Units (CP1W/CPM1A-8E□) (Terminal Block is not Removable)

Output Wiring **CP1W-8ER/CPM1A-8ER (Relay Outputs)**

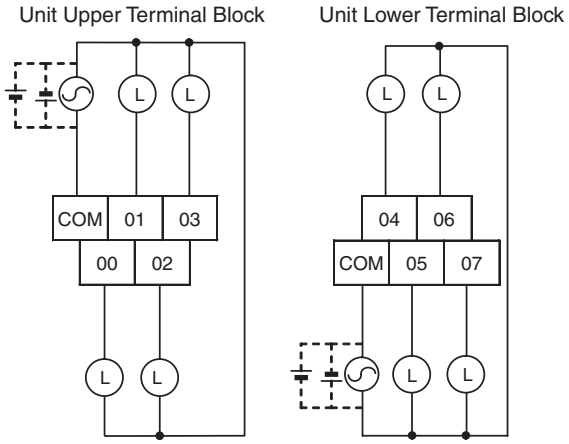

Output Wiring **CP1W-8ET/CPM1A-8ET (Sinking Transistor Outputs)**

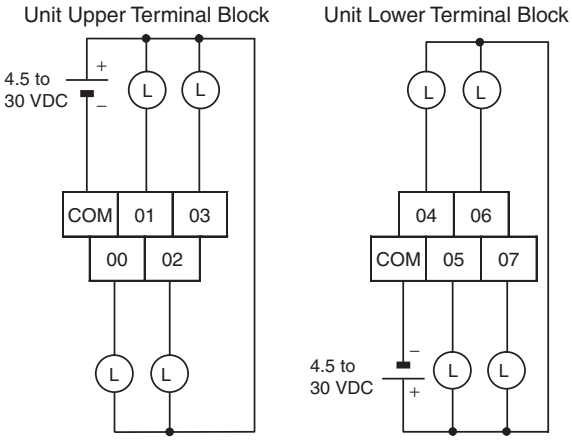

Output Wiring **CP1W-8ET1/CPM1A-8ET1 (Sourcing Transistor Outputs)**

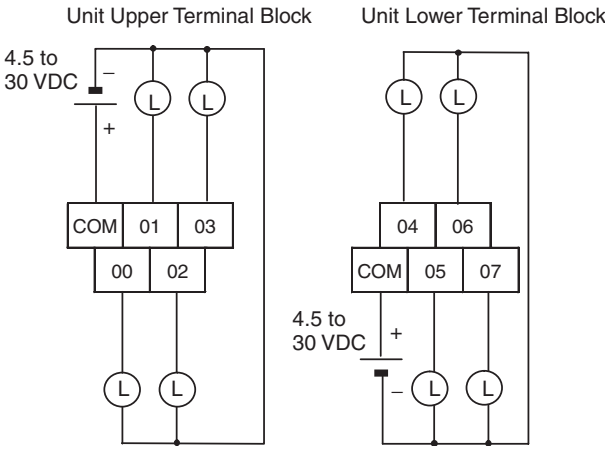

SECTION 4
I/O Memory Allocation

This section describes the structure and functions of the I/O Memory Areas and Parameter Areas.

4-1 Overview of I/O Memory Area . . . 138
4-1-1 I/O Memory Area . . . 138
4-1-2 Overview of the Data Areas . . . 139
4-1-3 Clearing and Holding I/O Memory . . . 143
4-1-4 Hot Start/Hot Stop Functions . . . 143
4-2 I/O Area and I/O Allocations . . . 145
4-2-1 I/O Bits Allocated to CPU Units . . . 146
4-2-2 I/O Bits Allocated to Expansion I/O Units . . . 148
4-2-3 I/O Allocation Examples with Expansion I/O Units . . . 150
4-2-4 I/O Word Allocations to Expansion Units . . . 151
4-3 1:1 Link Area . . . 152
4-4 Serial PLC Link Area . . . 153
4-5 Internal Work Area . . . 153
4-6 Holding Area (H) . . . 154
4-7 Auxiliary Area (A) . . . 155
4-8 TR (Temporary Relay) Area . . . 155
4-9 Timers and Counters . . . 156
4-9-1 Timer Area (T) . . . 156
4-9-2 Counter Area (C) . . . 157
4-9-3 Changing the BCD or Binary Mode for Counters and Timers . . . 159
4-10 Data Memory Area (D) . . . 160
4-11 Index Registers . . . 161
4-11-1 Using Index Registers . . . 165
4-11-2 Precautions for Using Index Registers . . . 167
4-12 Data Registers . . . 169
4-13 Task Flags . . . 171
4-14 Condition Flags . . . 171
4-15 Clock Pulses . . . 173

4-1 Overview of I/O Memory Area

4-1-1 I/O Memory Area

This region of memory contains the data areas that can be accessed as instruction operands. I/O memory includes the CIO Area, Work Area, Holding Area, Auxiliary Area, DM Area, Timer Area, Counter Area, Task Flag Area, Data Registers, Index Registers, Condition Flag Area, and Clock Pulse Area.

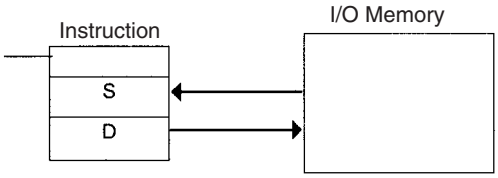

Area			Size	Range	Task usage	Allocation	Bit access	Word access	Access		Change from CX-Programmer	Forcing bit status
									Read	Write		
CIO Area	I/O Area	Input Area	1,600 bits (100 words)	CIO 0 to CIO 99	Shared by all tasks	CP1L CPU Units and CP-series Expansion Units or Expansion I/O Units	OK	OK	OK	OK	OK	OK
		Output Area	1,600 bits (100 words)	CIO 100 to CIO 199			OK	OK	OK	OK	OK	OK
	1:1 Link Area		256 bits (16 words)	CIO 3000 to CIO 3015		1:1 Links	OK	OK	OK	OK	OK	OK
	Serial PLC Link Area		1,440 bits (90 words)	CIO 3100 to CIO 3189		Serial PLC Links	OK	OK	OK	OK	OK	OK
	Work Area		14,400 bits (900 words)	CIO 3800 to CIO 6143		---	OK	OK	OK	OK	OK	OK
Work Area			8,192 bits (512 words)	W000 to W511		---	OK	OK	OK	OK	OK	OK
Holding Area			8,192 bits (512 words)	H000 to H511 (Note 6)		---	OK	OK	OK	OK	OK	OK
Auxiliary Area			15,360 bits (960 words)	A000 to A959		---	OK	---	OK	Note 1	Note 1	No
TR Area			16 bits	TR0 to TR15		---	OK	OK	OK	OK	No	No
Data Memory Area			32,768 words	D00000 to D32767 (Note 7)		---	No (Note 2)	OK	OK	OK	OK	No
Timer Completion Flags			4,096 bits	T0000 to T4095		---	OK	---	OK	OK	OK	OK
Counter Completion Flags			4,096 bits	C0000 to C4095		---	OK	---	OK	OK	OK	OK
Timer PVs			4,096 words	T0000 to T4095		---	---	OK	OK	OK	OK	No (Note 4)
Counter PVs			4,096 words	C0000 to C4095		---	---	OK	OK	OK	OK	No (Note 5)
Task Flag Area			32 bits	TK0 to TK31		---	OK	---	OK	No	No	No
Index Registers			16 registers	IR0 to IR15	Function separately in each task (Note 3)	---	OK	OK	Indirect addressing only	Specific instructions only	No	No
Data Registers			16 registers	DR0 to DR15		---	No	OK	OK	OK	No	No

Note

1. A0 to A447 are read only and cannot be written. A448 to A959 are read/write.
2. Bits can be manipulated using TST(350), TSTN(351), SET, SETB(532), RSTB(533), and OUTB(534).

3. Index registers and data registers can be used either individually by task or they can be shared by all the tasks (the default is individual use by task).
4. Timer PVs can be refreshed indirectly by force-setting/resetting the Timer Completion Flags.
5. Counter PVs can be refreshed indirectly by force-setting/resetting the Counter Completion Flags.
6. H512 to H1535 are used as a Function Block Holding Area. These words can be used only for function block instances (internally allocated variable area).
7. Data Memory Area for CPU Units with 10, 14 or 20 I/O Points: D0 to D9999 and D32000 to D32767.

4-1-2 Overview of the Data Areas

■ CIO Area

It is not necessary to input the "CIO" acronym when specifying an address in the CIO Area. The CIO Area is generally used for data exchanges, such as I/O refreshing with PLC Units. Words that are not allocated to Units may be used as work words and work bits in the program.

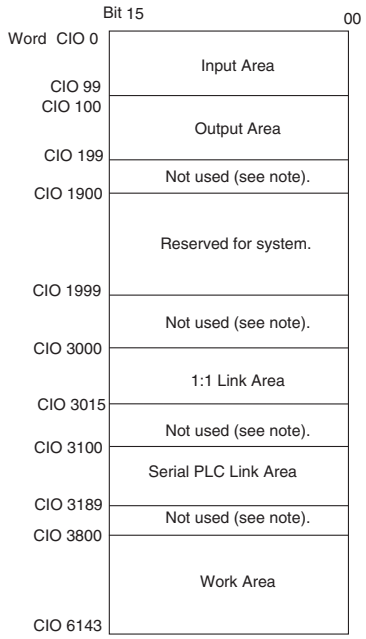

Note The parts of the CIO Area that are labelled "not used" may be used in programming as work bits. In the future, however, unused CIO Area bits may be used when expanding functions. Always use Work Area bits first.

I/O Area (Inputs: CIO 0 to CIO 99, Outputs: CIO 100 to CIO 199)

These words are allocated to built-in I/O terminals of CP1L CPU Units and CP-series Expansion Units or Expansion I/O Units. Input words and output bits that aren't allocated may be used in programming.

1:1 Link Area

These bits are used by the 1:1 Link Master and Slave. They are used for data links between CP1L CPU Units and CPM2□ CPU Units.

Serial PLC Link Area

These words are allocated for use for data links (Serial PLC Links) with other CP1L CPU Units or CP1H CPU Units. Addresses not used for Serial PLC Links can be used in programming.

Internal I/O Area

These words can be used in programming; they cannot be used for I/O exchange with external I/O terminals. Be sure to use the work words provided in the Work Area before using words in the Internal I/O Area or other unused words in the CIO Area. It is possible that these words will be assigned to new functions in future versions of the CPU Units. The parts of the CIO Area that are labelled “Not used” are functionally identical to the Internal I/O Area.

Work Area (W)

Words in the Work Area can be used in programming; they cannot be used for I/O exchange with external I/O terminals. Use this area for work words and bits before any words in the CIO Area.

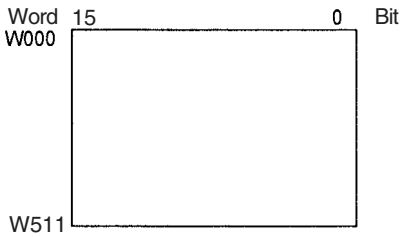

Note These words should be used first in programming be assigned to new functions in future versions of CP1L CPU Units.

Holding Area (H)

Words in the Holding Area can be used in programming. These words retain their content when the PLC is turned ON or the operating mode is switched between PROGRAM mode and RUN or MONITOR mode.

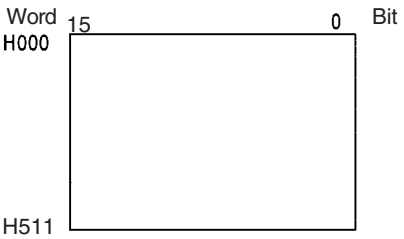

Note H512 to H1535 are used as a Function Block Holding Area. These words can be used only for function block instances (internally allocated variable area). These words cannot be specified as instruction operands in the user program.

Auxiliary Area (A)

These words are allocated to specific functions in the system.
Refer to *Appendix C Auxiliary Area Allocations by Function* and *Appendix D Auxiliary Area Allocations by Address* for details on the Auxiliary Area.

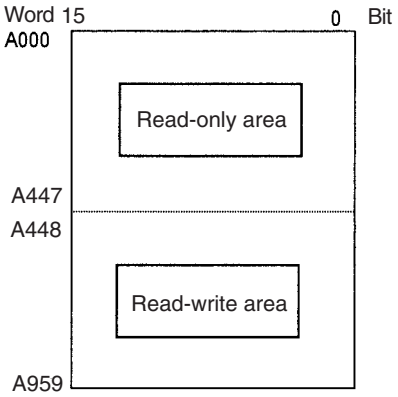

Temporary Relay Area (TR)

The TR Area contains bits that record the ON/OFF status of program branches. Refer to the *CP1H/CP1L Programming Manual* for details.

Data Memory Area (D)

The DM Area is a multi-purpose data area that is normally accessed only in word-units. These words retain their content when the PLC is turned ON or the operating mode is switched between PROGRAM mode and RUN or MONITOR mode.

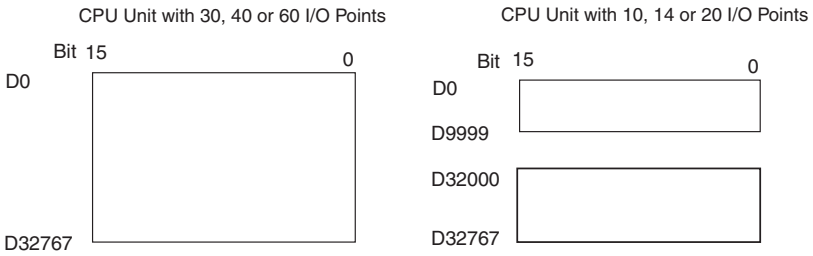

Timer Area (T)

There are two parts to the Timer Area: the Timer Completion Flags and the timer Present Values (PVs). Up to 4,096 timers with timer numbers T0 to T4095 can be used.

Timer Completion Flags

These flags are read as individual bits. A Completion Flag is turned ON by the system when the corresponding timer times out (i.e., when the set time elapses).

Timer PVs

The PVs are read and written as words (16 bits). The PVs count up or down as the timer operates.

Counter Area (C)

There are two parts to the Counter Area: the Counter Completion Flags and the Counter Present Values (PVs). Up to 4,096 counters with counter numbers C0 to C4095 can be used.

Counter Completion Flags

These flags are read as individual bits. A Completion Flag is turned ON by the system when the corresponding counter counts out (i.e., when the set value is reached).

Counter PVs

The PVs are read and written as words (16 bits). The PVs count up or down as the counter operates.

Condition Flags

These flags include the Arithmetic Flags, such as the Error Flag and Equals Flag, which indicate the results of instruction execution as well as the Always ON and Always OFF Flags. The Condition Flags are specified with symbols rather than addresses.

Clock Pulses

The Clock Pulses are turned ON and OFF by the CPU Unit's internal timer. These bits are specified with symbols rather than addresses.

Task Flag Area (TK)

A Task Flag will be ON when the corresponding cyclic task is in executable (RUN) status and OFF when the cyclic task hasn't been executed (INI) or is in standby (WAIT) status.

Index Registers (IR)

Index registers (IR0 to IR15) are used to store PLC memory addresses (i.e., absolute memory addresses in RAM) to indirectly address words in I/O memory. The Index Registers can be used separately in each task or they can be shared by all tasks.

Data Registers (DR)

Data registers (DR0 to DR15) are used together with Index Registers. When a Data Register is input just before an Index Register, the content of the Data Register is added to the PLC memory address in the Index Register to offset that address. The Data Registers can be used separately in each task or they can be shared by all tasks.

4-1-3 Clearing and Holding I/O Memory

Area		Mode changed[1]		Fatal error generated				PLC power turned ON			
				Execution of FALS		Other fatal errors		PLC Setup set to clear IOM Hold Bit status[2]		PLC Setup set to hold IOM Hold Bit status[2]	
		IOM Hold Bit OFF	IOM Hold Bit ON	IOM Hold Bit OFF	IOM Hold Bit ON	IOM Hold Bit OFF	IOM Hold Bit ON	IOM Hold Bit OFF	IOM Hold Bit ON	IOM Hold Bit OFF	IOM Hold Bit ON
CIO Area	I/O Area	Cleared	Retained	Retained	Retained	Cleared	Retained	Cleared	Cleared	Cleared	Retained
	Serial PC Link Area										
	Internal I/O Area										
Work Area (W)		Cleared	Retained	Retained	Retained	Cleared	Retained	Cleared	Cleared	Cleared	Retained
Holding Area (H)		Retained	Retained	Retained	Retained	Retained	Retained	Retained	Retained	Retained	Retained
Auxiliary Area (A)		Status treatment depends on address.									
Data Memory Area (D)		Retained	Retained	Retained	Retained	Retained	Retained	Retained	Retained	Retained	Retained
Timer Completion Flags (T)		Cleared	Retained	Retained	Retained	Cleared	Retained	Cleared	Cleared	Cleared	Retained
Timer PVs (T)		Cleared	Retained	Retained	Retained	Cleared	Retained	Cleared	Cleared	Cleared	Retained
Counter Completion Flags (C)		Retained	Retained	Retained	Retained	Retained	Retained	Retained	Retained	Retained	Retained
Counter PVs (C)		Retained	Retained	Retained	Retained	Retained	Retained	Retained	Retained	Retained	Retained
Task Flags (TK)		Cleared	Cleared	Retained	Retained	Cleared	Cleared	Cleared	Cleared	Cleared	Cleared
Index Registers (IR)		Cleared	Retained	Retained	Retained	Cleared	Retained	Cleared	Cleared	Cleared	Retained
Data Registers (DR)		Cleared	Retained	Retained	Retained	Cleared	Retained	Cleared	Cleared	Cleared	Retained

Note
1. Mode changed from PROGRAM to RUN/MONITOR or vice-versa.
2. The PLC Setup's *IOM Hold Bit Status at Startup* setting determines whether the IOM Hold Bit's status is held or cleared when the PLC is turned ON.

4-1-4 Hot Start/Hot Stop Functions

Operating Mode Changes

Hot Start

Turn ON the IOM Hold Bit to retain all data* in I/O memory when the CPU Unit is switched from PROGRAM mode to RUN/MONITOR mode to start program execution.

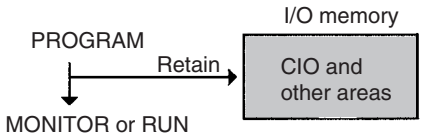

Hot Stop

When the IOM Hold Bit is ON, all data* in I/O memory will also be retained when the CPU Unit is switched from RUN or MONITOR mode to PROGRAM mode to stop program execution.

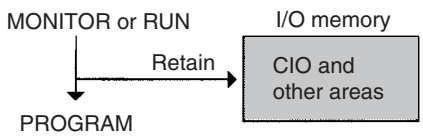

Note *The following areas of I/O memory will be cleared during mode changes (between PROGRAM and RUN/MONITOR) unless the IOM Hold Bit is ON: the CIO Area (I/O Area, Data Link Area, CPU Bus Unit Area, Special I/O Unit Area, DeviceNet (CompoBus/D) Area, and Internal I/O Areas), Work Area, Timer Completion Flags, and Timer PVs.

Auxiliary Area Flags and Words

Name	Address	Description
IOM Hold Bit	A500.12	Specifies whether the I/O memory will be retained or not when the CPU Unit operating mode is changed (between PROGRAM and RUN/MONITOR) or when the power is cycled. OFF: I/O memory is cleared to 0 when the operating mode is changed. ON: I/O memory is retained when the operating mode is changed between PROGRAM and RUN or MONITOR.

When the IOM Hold Bit is ON, all outputs from Output Units will be maintained when program execution stops. When the program starts again, outputs will have the same status that they had before the program was stopped and instructions will be executed. (When the IOM Hold Bit is OFF, instructions will be executed after the outputs have been cleared.)

PLC Power ON

In order for all data* in I/O memory to be retained when the PLC is turned ON, the IOM Hold Bit must be ON and it must be protected in the PLC Setup using the *IOM Hold Bit Status at Startup* parameter.

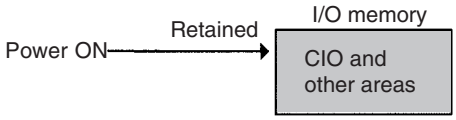

Auxiliary Area Flags and Words

Name	Address	Description
IOM Hold Bit	A500.12	Specifies whether the I/O memory will be retained or not when the CPU Unit operating mode is changed (between PROGRAM and RUN/MONITOR) or when the power is cycled. OFF: I/O memory is cleared to 0 when the operating mode is changed. ON: I/O memory is retained when the operating mode is changed between PROGRAM and RUN or MONITOR.

PLC Setup

Name	Description	Setting	Default
IOM Hold Bit Status at Startup	To retain all data in I/O memory when the PLC is turned ON, set the *IOM Hold Bit at startup* parameter to hold the status of the I/O Hold Bit.	OFF: The IOM Hold Bit is cleared to 0 when power is cycled. ON: The status of the IOM Hold Bit is retained when power is cycled.	OFF (Cleared)

4-2 I/O Area and I/O Allocations

Input Bits: CIO 0.00 to CIO 99.15 (100 words)

Output Bits: CIO 100.00 to CIO 199.15 (100 words)

The starting words for inputs and outputs are predetermined for CP1L CPU Unit. Input bits in CIO 0 and CIO 1 and output bits in CIO 100 and CIO 101 are automatically allocated to the built-in I/O on the CPU Unit. CP-series Expansion Units and CP-series Expansion I/O Units are automatically allocated input bits in words starting from CIO 2 and output bits in words starting from CIO 102.

- Allocated Words and Number of Expansion Units and Expansion I/O Units

CPU Unit	Allocated words		Number of Expansion Units and Expansion I/O Units connected
	Input bits	Output bits	
CPU Unit with 10 I/O points	CIO 0	CIO 100	0
CPU Unit with 14 I/O points	CIO 0	CIO 100	1
CPU Unit with 20 I/O points	CIO 0	CIO 100	1
CPU Unit with 30 I/O points	CIO 0 and CIO 1	CIO 100 and CIO 101	3
CPU Unit with 40 I/O points	CIO 0 and CIO 1	CIO 100 and CIO 101	3
CPU Unit with 60 I/O points	CIO 0, CIO 1, CIO 2	CIO 100, CIO 101, CIO 102	3

For example, with a CPU Unit with 40 I/O points, the input bits in CIO 0 and CIO 1 and the outputs bits in CIO 100 and CIO 101 would be allocated to the built-in I/O of the CPU Unit. Input bits in CIO 2 and higher and outputs bits in CIO 102 and higher would be automatically allocated in order to any Expansion Units or Expansion I/O Units connected to the CPU Unit.

When the power to the CPU Unit is turned ON, the CPU Unit checks for any Expansion Units and Expansion I/O Units connected to it and automatically allocates I/O bits. If the order in which the Units are connected is changed, the the bits used in the ladder program will no longer match the bits allocated to the actual Units. Always review the ladder program whenever changing the order in which Units are connected.

4-2-1 I/O Bits Allocated to CPU Units

CPU Unit with 10 I/O Points

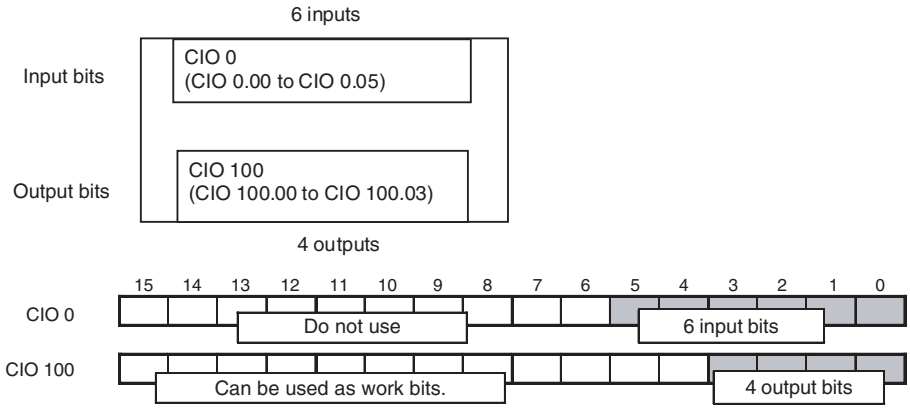

CPU Unit with 14 I/O Points

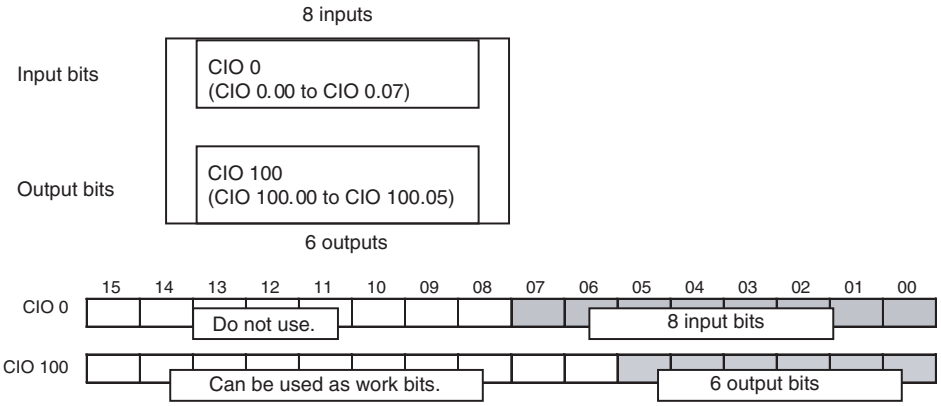

CPU Unit with 20 I/O Points

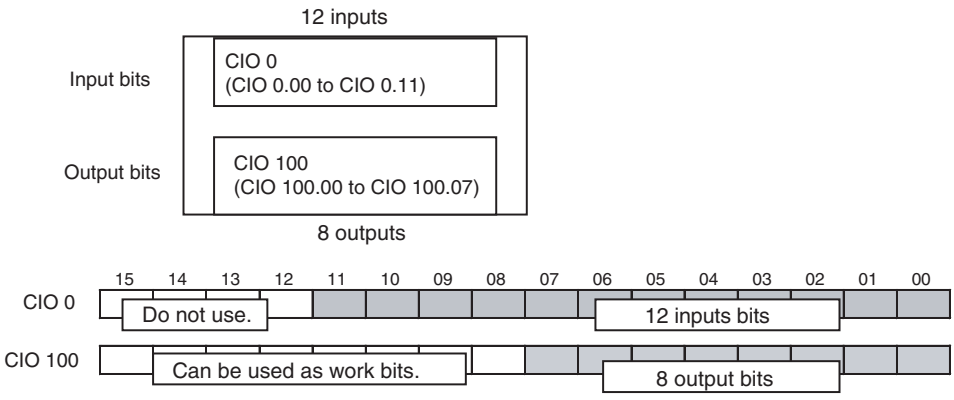

CPU Unit with 30 I/O Points

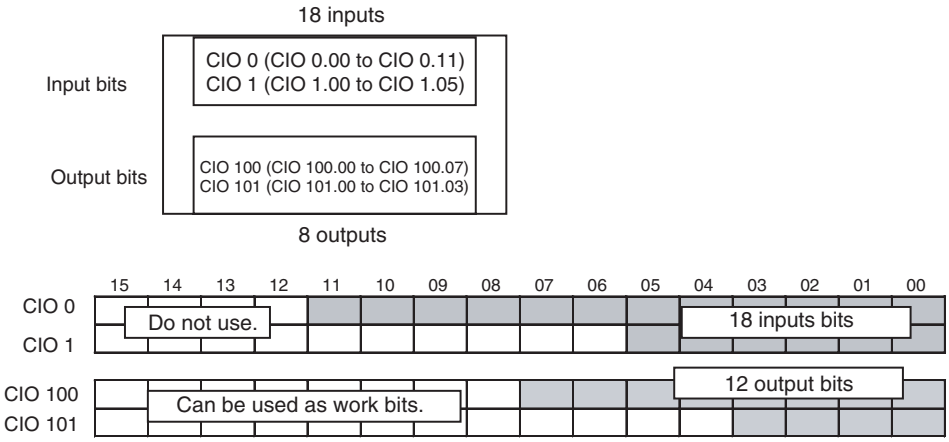

CPU Unit with 40 I/O Points

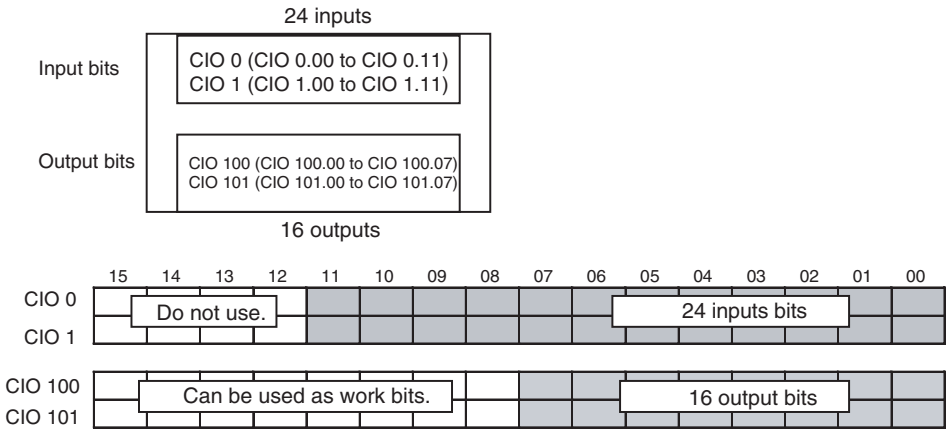

CPU Unit with 60 I/O Points

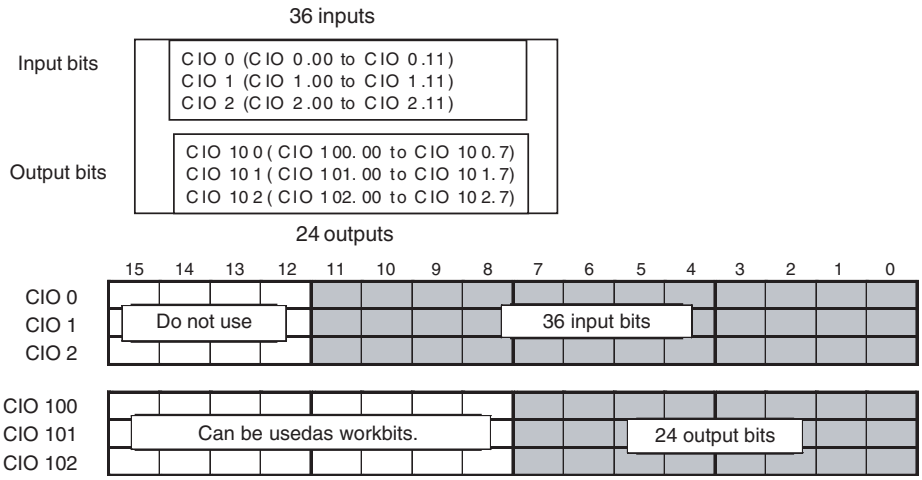

For a CPU Unit with 40 I/O points (shown above), a total of 24 input bits are allocated to the input terminal block. The bits that are allocated are input bits CIO 0.00 to CIO 0.11 (i.e., bits 00 to 11 in CIO 0) and input bits CIO 1.00 to CIO 1.11 (i.e., bits 00 to 11 in CIO 1).

In addition, a total of 16 output bits are allocated to the output terminal block. The bits that are allocated are output bits CIO 100.00 to CIO 100.07 (i.e., bits

00 to 07 in CIO 0) and output bits CIO 101.00 to CIO 101.07 (i.e., bits 00 to 07 in CIO 1).

The upper bits (bits 12 to 15) not used in the input words cannot be used as work bits. Only the bits not used in the output words can be used as work bits.

4-2-2 I/O Bits Allocated to Expansion I/O Units

There are Expansion I/O Units for expanding inputs, for expanding outputs, and for expanding both input and outputs. I/O bits starting from bit 00 in the next word after the word allocated to the previous Expansion Unit, Expansion I/O Unit, or CPU Unit are automatically allocated. This word is indicated as "CIO m" for input words and as "CIO n" for output words.

Unit			Input bits			Output bits		
			No. of bits	No. of words	Addresses	No. of bits	No. of words	Addresses
Unit with 8 inputs		CP1W-8ED CPM1A-8ED	8 bits	1 word	CIO m (bits 00 to 07)	---	None	None
Unit with 8 outputs	Relays	CP1W-8ER CPM1A-8ER	---	None	None	8 bits	1 word	CIO n (bits 00 to 07)
	Sinking transistors	CP1W-8ET CPM1A-8ET	---	None	None	8 bits	1 word	CIO n (bits 00 to 07)
	Sourcing transistors	CP1W-8ET1 CPM1A-8ET1	---	None	None	8 bits	1 word	CIO n (bits 00 to 07)
Unit with 16 outputs	Relays	CP1W-16ER CPM1A-16ER	---	None	None	16 bits	2 words	CIO n (bits 00 to 07) CIO n+1 (bits 00 to 07)
	Sinking transistors	CP1W-16ET	---	None	None	16 bits	2 words	CIO n (bits 00 to 07) CIO n+1 (bits 00 to 07)
	Sourcing transistors	CP1W-16ET1	---	None	None	16 bits	2 words	CIO n (bits 00 to 07) CIO n+1 (bits 00 to 07)
Unit with 20 I/O	Relays	CP1W-20EDR1 CPM1A-20EDR1	12 bits	1 word	CIO m (bits 00 to 11)	8 bits	1 word	CIO n (bits 00 to 07)
	Sinking transistors	CP1W-20EDT CPM1A-20EDT	12 bits	1 word	CIO m (bits 00 to 11)	8 bits	1 word	CIO n (bits 00 to 07)
	Sourcing transistors	CP1W-20EDT1 CPM1A-20EDT1	12 bits	1 word	CIO m (bits 00 to 11)	8 bits	1 word	CIO n (bits 00 to 07)
Unit with 32 outputs	Relays	CP1W-32ER	---	None	None	32 bits	4 words	CIO n (bits 00 to 07) CIO n+1 (bits 00 to 07) CIO n+2 (bits 00 to 07) CIO n+3 (bits 00 to 07)
	Sinking transistors	CP1W-32ET	---	None	None	32 bits	4 words	CIO n (bits 00 to 07) CIO n+1 (bits 00 to 07) CIO n+2 (bits 00 to 07) CIO n+3 (bits 00 to 07)
	Sourcing transistors	CP1W-32ET1	---	None	None	32 bits	4 words	CIO n (bits 00 to 07) CIO n+1 (bits 00 to 07) CIO n+2 (bits 00 to 07) CIO n+3 (bits 00 to 07)
Unit with 40 I/O	Relays	CP1W-40EDR CPM1A-40EDR	24 bits	2 words	CIO m (bits 00 to 11) CIO m+1 (bits 00 to 11)	16 bits	2 words	CIO n (bits 00 to 07) CIO n+1 (bits 00 to 07)
	Sinking transistors	CP1W-40EDT CPM1A-40EDT	24 bits	2 words	CIO m (bits 00 to 11) CIO m+1 (bits 00 to 11)	16 bits	2 words	CIO n (bits 00 to 07) CIO n+1 (bits 00 to 07)
	Sourcing transistors	CP1W-40EDT1 CPM1A-40EDT1	24 bits	2 words	CIO m (bits 00 to 11) CIO m+1 (bits 00 to 11)	16 bits	2 words	CIO n (bits 00 to 07) CIO n+1 (bits 00 to 07)

■ I/O Bit Addresses

Units 8 Input Points (CP1W-8ED/CPM1A-8ED)

Eight input bits are allocated in one word (bits 00 to 07 in CIO m).

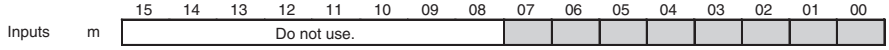

Only one word (8 bits) is allocated to an 8-input Expansion Input Unit. No output words are allocated. Input bits 08 to 15 are always cleared by the system and cannot be used as work bits.

Units with 8 Output Points (CP1W-8E□□/CPM1A-8E□□)

Eight output bits are allocated in one word (bits 00 to 07 in CIO n+1).

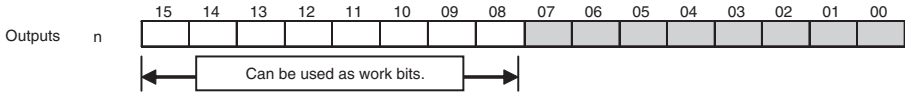

Only one word (8 bits) is allocated to an 8-output Expansion Output Unit. No input words are allocated. Output bits 08 to 15 can be used as work bits.

Units with 16 Output Points (CP1W-16E□□/CPM1A-16E□□)

Sixteen output bits in two words are allocated in two words (bits 00 to 07 in CIO n and bits 00 to 07 in CIO n+1).

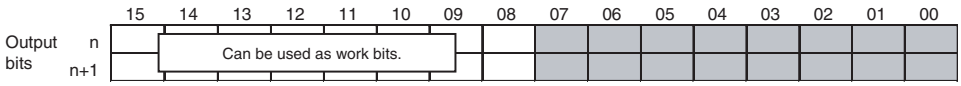

Two words (16 bits) are allocated to a 16-output Expansion Output Unit. No input words are allocated. Output bits 08 to 15 can be used as work bits.

Units with 20 I/O Points (CPM1A-20ED□□/20EDT/20ED□□)

Twelve input bits are allocated in one word (bits 00 to 11 in CIO m). Eight output bits are allocated in one word (bits 00 to 07 in CIO n).

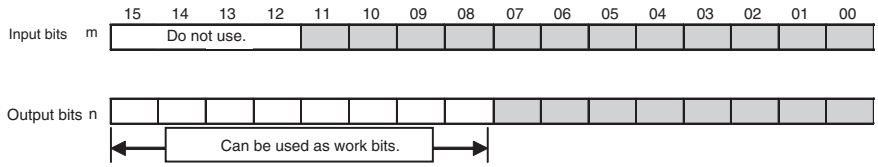

One input word (12 bits) and one output word (8 bits) are allocated for a 20-point Expansion I/O Unit.

Input bits 12 to 15 are always cleared by the system and cannot be used as work bits. Output bits 08 to 15, however, can be used as work bits.

Units with 32 Output Points (CP1W-32E□□)

Thirty-two output bits are allocated in four words (bits 00 to 07 in CIO n, bits 00 to 07 in CIO n+1, bits 00 to 07 in CIO n+2 and bits 00 to 07 in CIO n+3).

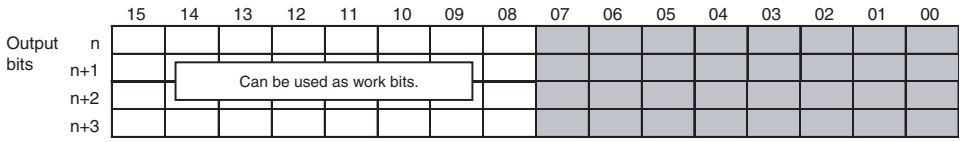

Four words (32 bits) are allocated to a 32-output Expansion Output Unit. No input words are allocated. Output bits 08 to 15 can be used as work bits.

Units with 40 I/O Points (CPM1A-40ED□□/40EDT/40ED□□)

Twenty-four input bits in two words are allocated (bits 00 to 11 in CIO m and bits 00 to 11 CIO m+1). Sixteen output bits in two words are allocated (bits 00 to 07 in CIO n and bits 00 to 07 in CIO n+1).

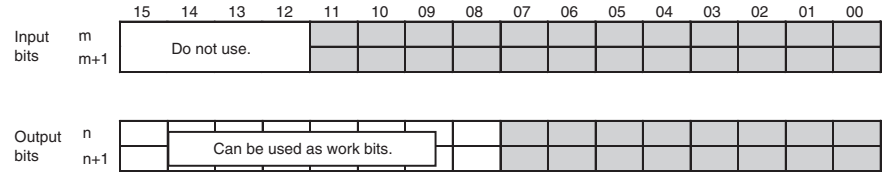

Two input words (24 bits) and two output words (16 bits) are allocated to a 40-point Expansion I/O Unit. Input bits 12 to 15 cannot be used as work bits. Output bits 08 to 15, however, can be used as work bits.

4-2-3 I/O Allocation Examples with Expansion I/O Units

Example 1: Maximum I/O Capacity

The configuration shown in this example is for the maximum I/O capacity. It consists of a CPU Unit with 40 I/O points and three Expansion I/O Units, each with 40 I/O points. Up to three Expansion I/O Units can be connected to a CPU Unit with either 30, 40 or 60 I/O points.

When Expansion I/O Units with 40 I/O points are connected, control is possible for up to 160 I/O points, including 96 inputs and 64 outputs.

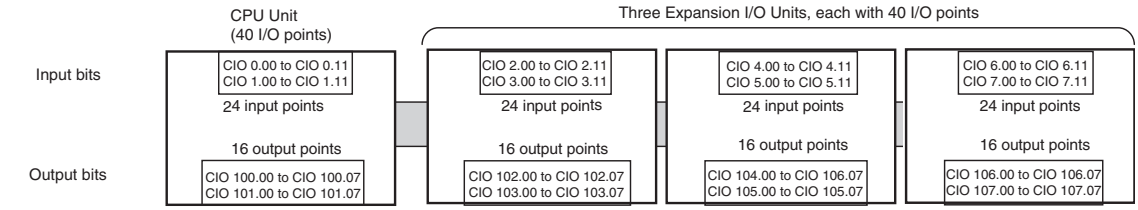

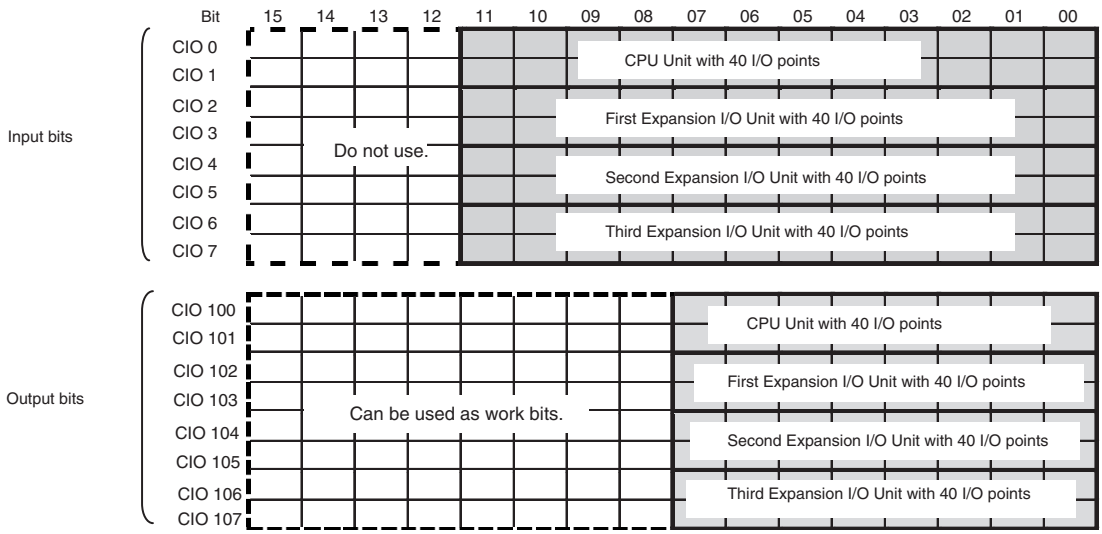

Example 2: Connecting Expansion I/O Units with Only Inputs or Only Outputs

If Expansion I/O Units with only inputs or only outputs are connected, the input or output word not used by an Expansion I/O Unit is allocated to the next Unit that requires it.

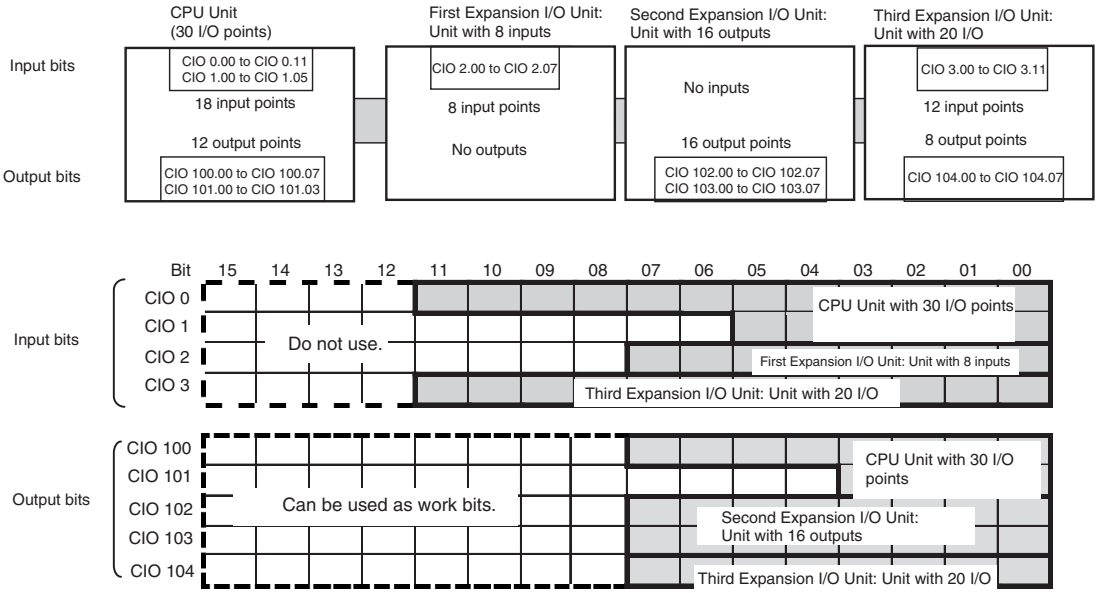

4-2-4 I/O Word Allocations to Expansion Units

Unit		Input words		Output words	
Analog I/O Units	CP1W-MAD11 CPM1A-MAD11 CPM1A-MAD01	2 words	CIO m to CIO m+1	1 word	CIO n
Analog Input Units	CP1W-AD041 CPM1A-AD041	4 words	CIO m to CIO m+3	2 words	CIO n to CIO n+1
Analog Output Units	CP1W-DA021	None	---	2 words	CIO n to CIO n+1
	CP1W-DA041 CPM1A-DA041	None	---	4 words	CIO n to CIO n+3
Temperature Sensor Units	CP1W-TS001 CPM1A-TS001	2 words	CIO m to CIO m+1	None	---
	CP1W-TS002 CPM1A-TS002	4 words	CIO m to CIO m+3	None	---
	CP1W-TS101 CPM1A-TS101	2 words	CIO m to CIO m+1	None	---
	CP1W-TS102 CPM1A-TS102	4 words	CIO m to CIO m+3	None	---
DeviceNet I/O Link Units	CPM1A-DRT21	2 words	CIO m to CIO m+1	2 words	CIO n to CIO n+1
CompoBus/S I/O Link Units	CP1W-SRT21 CPM1A-SRT21	1 word	CIO m	1 word	CIO n

m: Indicates the next input word after the input word allocated to the Expansion Unit, Expansion I/O Unit, or CPU Unit to the left of the current Unit.

n: Indicates the next output word after the output word allocated to the Expansion Unit, Expansion I/O Unit, or CPU Unit to the left of the current Unit.

■ **I/O Word Allocations to Expansion Units**

CPU Unit with 40 I/O Points + TS002 + DA041 + 40ED

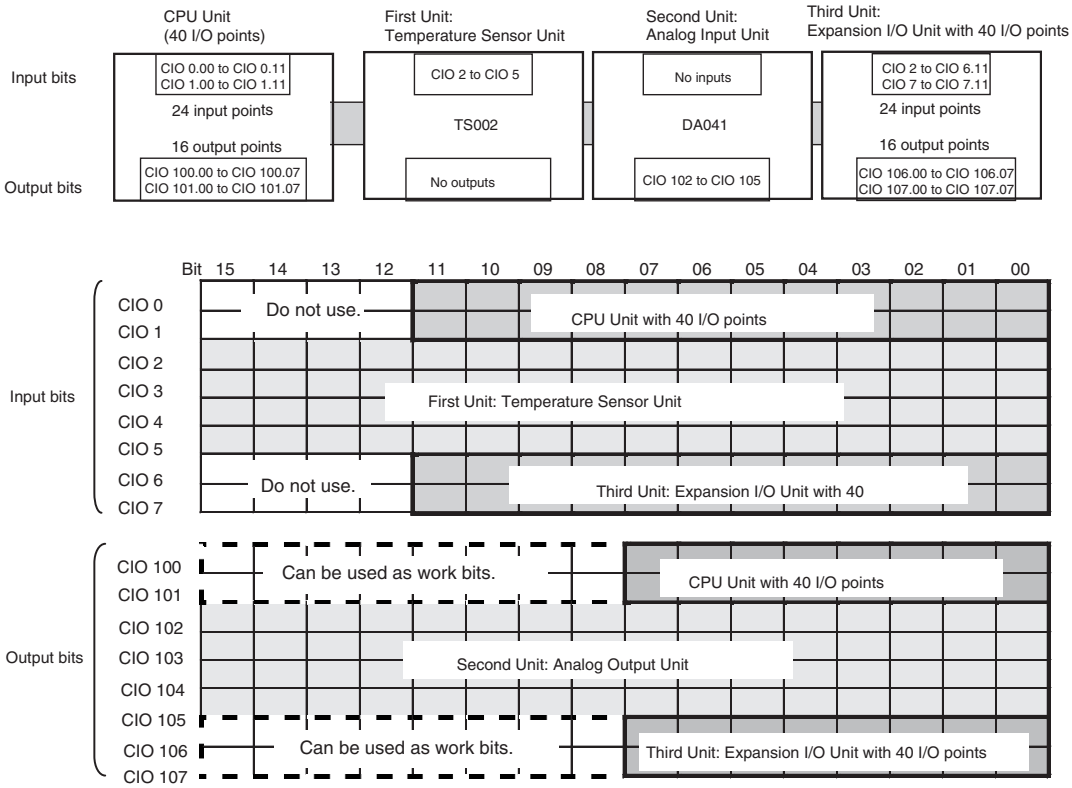

4-3 1:1 Link Area

The 1:1 Link Area contains 1,024 bits (64 words) with addresses ranging from CIO 3000.00 to CIO 3015.15 (CIO 3000 to CIO 3015).

These bits are used to create 1:1 links (i.e., shared data link areas) by connecting the RS-232C ports of two PLCs, including the CP1L, CPM1A, CPM2A, CPM2B, CPM2C, SRM1(-V2), CQM1H, and C200HX/HG/HE(-Z).

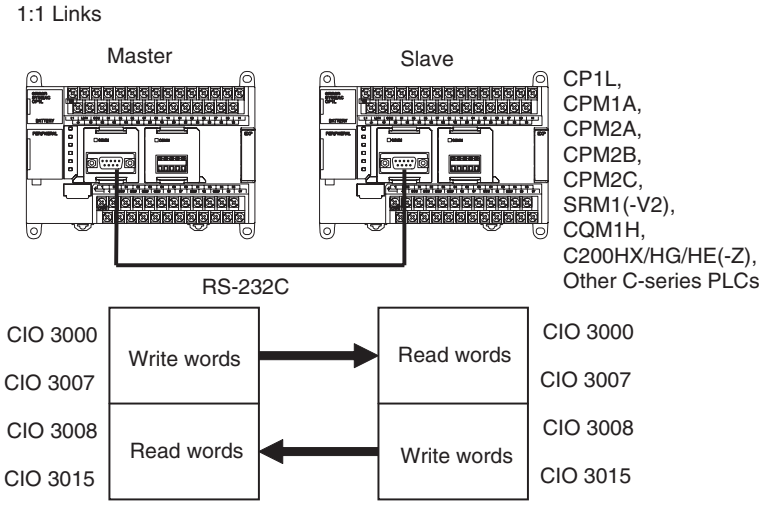

Refer to *6-3-6 1:1 Links* for information on using 1:1 links.

4-4 Serial PLC Link Area

The Serial PLC Link Area contains 1,440 bits (90 words) with addresses ranging from CIO 3100.00 to CIO 3189.15 (CIO 3100 to CIO 3189).

Words in the Serial PLC Link Area can be used for data links with other PLCs.

Serial PLC Links exchange data among CPU Units via the built-in RS-232C ports, with no need for special programming.

The Serial PLC Link allocations are set automatically by means of the following PLC Setup in the Polling Unit.

- Serial PLC Link Mode
- Number of Serial PLC Link transfer words
- Maximum Serial PLC Link unit number

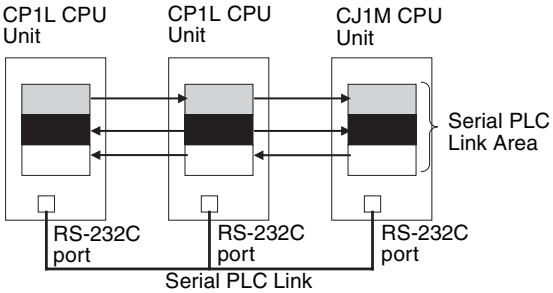

Addresses not used for Serial PLC Links can be used in programming, the same as the Work Area.

Forcing Bit Status

Bits in the Serial PLC Link Area can be force-set and force-reset.

Serial PLC Link Area Initialization

The contents of the Serial PLC Link Area will be cleared in the following cases:

1. When the operating mode is changed from PROGRAM mode to RUN/MONITOR mode or vice-versa and the IOM Hold Bit is OFF
2. When the power is cycled
3. When the Serial PLC Link Area is cleared from the CX-Programmer
4. When PLC operation is stopped when a fatal error other than an FALS(007) error occurs (The contents of the Serial PLC Link Area will be retained when FALS(007) is executed.)

4-5 Internal Work Area

The Internal Work Area contains 512 words with addresses ranging from W0 to W511. These words can be used in programming as work words.

There are unused words in the CIO Area (CIO 3800 to CIO 6143) that can also be used in the program, but use any available words in the Work Area first because the unused words in the CIO Area may be allocated to other applications when functions are expanded.

Forcing Bit Status

Bits in the Work Area can be force-set and force-reset.

Work Area Initialization

The contents of the Work Area will be cleared in the following cases:

1. When the operating mode is changed from PROGRAM to RUN or MONITOR mode or vice-versa and the IOM Hold Bit is OFF
2. When the power is cycled
3. When the Work Area is cleared from the CX-Programmer.

4. When PLC operation is stopped when a fatal error other than an FALS(007) error occurs. (The contents of the Work Area will be retained when FALS(007) is executed.)

4-6 Holding Area (H)

The Holding Area contains 512 words with addresses ranging from H0 to H511 (bits H0.00 to H511.15). These words can be used in programming.

Holding Area Initialization

Data in the Holding Area is not cleared when the power is cycled or the PLC's operating mode is changed from PROGRAM mode to RUN or MONITOR mode or vice-versa.

A Holding Area bit will be cleared if it is programmed between IL(002) and ILC(003) and the execution condition for IL(002) is OFF. To keep a bit ON even when the execution condition for IL(002) is OFF, turn ON the bit with the SET instruction just before IL(002).

Self-maintaining Bits

When a self-maintaining bit is programmed with a Holding Area bit, the self-maintaining bit won't be cleared even when the power is reset.

Note

1. If a Holding Area bit is not used for the self-maintaining bit, the bit will be turned OFF and the self-maintaining bit will be cleared when the power is reset.
2. If a Holding Area bit is used but not programmed as a self-maintaining bit as in the following diagram, the bit will be turned OFF by execution condition A when the power is reset.

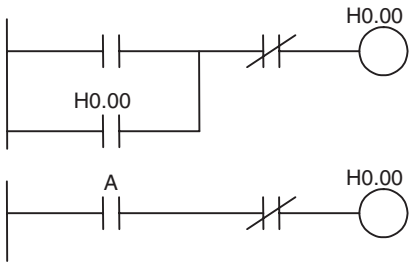

3. H512 to H1535 are used as a Function Block Holding Area. These words can be used only for function block instances (internally allocated variable area). These words cannot be specified as instruction operands in the user program.

Precautions

When a Holding Area bit is used in a KEEP(011) instruction, never use a normally closed condition for the reset input if the input device uses an AC power supply. When the power supply goes OFF or is temporarily interrupted, the input will go OFF before the PLC's internal power supply and the Holding Area bit will be reset.

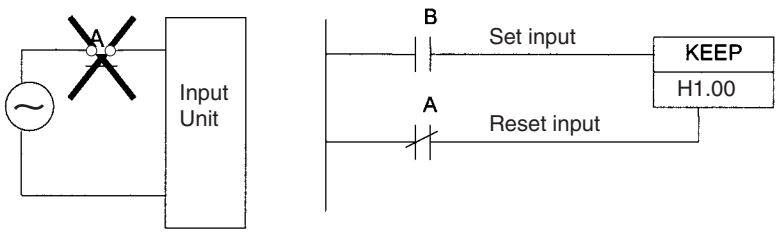

Instead, use a configuration like the one shown below.

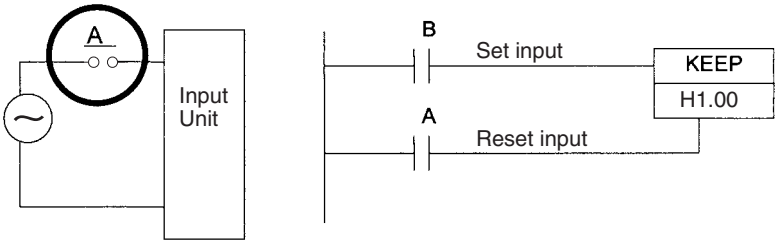

There are no restrictions in the order of using bit address or in the number of N.C. or N.O. conditions that can be programmed.

4-7 Auxiliary Area (A)

The Auxiliary Area contains 960 words with addresses ranging from A0 to A959). These words are preassigned as flags and control bits to monitor and control operation.

A0 through A447 are read-only, but A448 through A959 can be read or written from the program or the CX-Programmer.

Refer to *Appendix C Auxiliary Area Allocations by Function* and *Appendix D Auxiliary Area Allocations by Address* for Auxiliary Area functions.

Forcing Bit Status

Read/write bits in the Auxiliary Area cannot be force-set and force-reset continuously.

4-8 TR (Temporary Relay) Area

The TR Area contains 16 bits with addresses ranging from TR0 to TR15. These temporarily store the ON/OFF status of an instruction block for branching and are used only with mnemonics. TR bits are useful when there are several output branches and interlocks cannot be used.

The TR bits can be used as many times as required and in any order required as long as the same TR bit is not used twice in the same instruction block.

TR bits can be used only with the OUT and LD instructions. OUT instructions (OUT TR0 to OUT TR15) store the ON OFF status of a branch point and LD instructions recall the stored ON OFF status of the branch point.

Forcing Bit Status

TR bits cannot be changed from the CX-Programmer.

Examples

In this example, a TR bit is used when two outputs have been directly connected to a branch point.

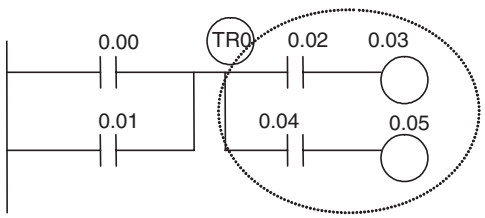

Instruction	Operand
LD	0.00
OR	0.01
OUT	TR 0
AND	0.02
OUT	0.03
LD	TR 0
AND	0.04
OUT	0.05

In this example, a TR bit is used when an output is connected to a branch point without a separate execution condition.

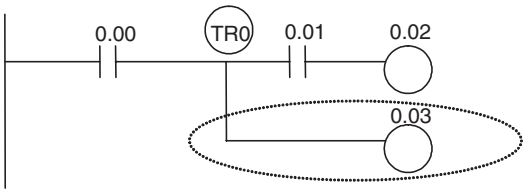

Instruction	Operand
LD	0.00
OUT	TR 0
AND	0.01
OUT	0.02
LD	TR 0
OUT	0.03

Note A TR bit is not required when there are no execution conditions after the branch point or there is an execution condition only in the last line of the instruction block.

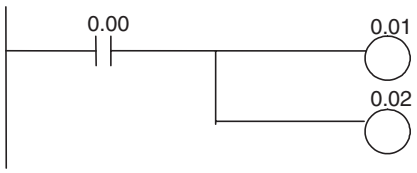

Instruction	Operand
LD	0.00
OUT	0.01
OUT	0.02

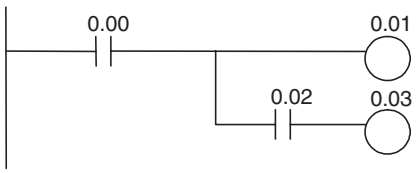

Instruction	Operand
LD	0.00
OUT	0.01
AND	0.02
OUT	0.03

4-9 Timers and Counters

4-9-1 Timer Area (T)

The 4,096 timer numbers (T0000 to T4095) are shared by the TIM, TIMX(550), TIMH(015), TIMHX(551), TMHH(540), TIMHHX(552), TTIM(087), TTIMX(555), TIMW(813), TIMWX(816), TMHW(815), and TIMHWX(817) instructions. Timer Completion Flags and present values (PVs) for these instructions are accessed with the timer numbers.

The TIML(542), TIMLX(553), MTIM(543), and MTIMX(554) instructions do not use timer numbers.

When a timer number is used in an operand that requires bit data, the timer number accesses the Completion Flag of the timer. When a timer number is used in an operand that requires word data, the timer number accesses the PV of the timer. Timer Completion Flags can be used as often as necessary as normally open and normally closed conditions and the values of timer PVs can be read as normal word data.

The refresh method for timer PVs can be set from the CX-Programmer to either BCD or binary.

Note It is not recommended to use the same timer number in two timer instructions because the timers will not operate correctly if they are timing simultaneously. (If two or more timer instructions use the same timer number, an error will be generated during the program check, but the timers will operate as long as the instructions are not executed in the same cycle.)

The following table shows when timers will be reset or maintained.

Instruction name	Effect on PV and Completion Flag			Operation in Jumps and Interlocks	
	Mode change[1]	PLC start-up[2]	CNR(545)/CNRX(547)	Jumps (JMP-JME) or Tasks on standby[4]	Interlocks (IL-ILC)
TIMER: TIM/TIMX(550)	PV → 0 Flag → OFF	PV → 0 Flag → OFF	PV → 9999 Flag → OFF	PVs refreshed in operating timers	PV → SV (Reset to SV.) Flag → OFF
HIGH-SPEED TIMER: TIMH(015)/TIMHX(551)					
ONE-MS TIMER: TMHH(540)/TMHHX(552)					
ACCUMULATIVE TIMER: TTIM(087)/TTIMX(555)				PV Maintained	PV Maintained
TIMER WAIT: TIMW(813)TIMWX(816)				PVs refreshed in operating timers	---
HIGH-SPEED TIMER WAIT: TMHW(815)/TMHWX(817)					---

Note

1. If the IOM Hold Bit (A500.12) is ON, the PV and Completion Flag will be retained when a fatal error occurs (including execution of FALS instructions) or the operating mode is changed from PROGRAM mode to RUN or MONITOR mode or vice-versa. The PV and Completion Flag will be cleared when power is cycled.
2. If the IOM Hold Bit (A50012) is ON and the PLC Setup's *IOM Hold Bit Status at Startup* setting is set to protect the IOM Hold Bit, the PV and Completion Flag will be retained when the PLC's power is cycled.
3. Since the TIML(542), TIMLX(553), MTIM(543), and MTIMX(554) instructions do not use timer numbers, they are reset under different conditions. Refer to the descriptions of these instructions for details.
4. The present value of TIM, TIMX(550), TIMH(015), TIMHX(551), TMHH(540), TMHHX(552), TIMW(813), TIMWX(816), TMHW(815) and TMHWX(817) timers programmed with timer numbers 0000 to 2047 will be updated even when jumped between JMP and JME instructions or when in a task that is on standby. The present value of timers programmed with timer numbers 2048 to 4095 will be held when jumped or when in a task that is on standby.

Forcing Bit Status

Timer Completion Flags can be force-set and force-reset.

Timer PVs cannot be force-set or force-reset, although the PVs can be refreshed indirectly by force-setting/resetting the Completion Flag.

Restrictions

There are no restrictions in the order of using timer numbers or in the number of N.C. or N.O. conditions that can be programmed. Timer PVs can be read as word data and used in programming.

4-9-2 Counter Area (C)

The 4,096 counter numbers (C0000 to C4095) are shared by the CNT, CNTX(546), CNTR(012), CNTRX(548), CNTW(814), and CNTWX(818) instructions. Counter Completion Flags and present values (PVs) for these instructions are accessed with the counter numbers.

When a counter number is used in an operand that requires bit data, the counter number accesses the Completion Flag of the counter. When a counter number is used in an operand that requires word data, the counter number accesses the PV of the counter.

The refresh method for counter PVs can be set from the CX-Programmer to either BCD or binary. (Refer to the previous page).

It is not recommended to use the same counter number in two counter instructions because the counters will not operate correctly if they are counting simultaneously. If two or more counter instructions use the same counter number, an error will be generated during the program check, but the counters will operate as long as the instructions are not executed in the same cycle.

The following table shows when counter PVs and Completion Flags will be reset.

Instruction name	Effect on PV and Completion Flag					
	Reset	Mode change	PLC startup	Reset Input	CNR(545)/CNRX(547)	Interlocks (IL-ILC)
COUNTER: CNT/CNTX(546)	PV → 0 Flag → OFF	Maintained	Maintained	Reset	Reset	Maintained
REVERSIBLE COUNTER: CNTR(012)/CNTRX(548)						
COUNTER WAIT: CNTW(814)/CNTWX(818)						

Forcing Bit Status

Counter Completion Flags can be force-set and force-reset.

Counter PVs cannot be force-set or force-reset, although the PVs can be refreshed indirectly by force-setting/resetting the Completion Flag.

Restrictions

There are no restrictions in the order of using counter numbers or in the number of N.C. or N.O. conditions that can be programmed. Counter PVs can be read as word data and used in programming.

4-9-3 Changing the BCD or Binary Mode for Counters and Timers

The refresh method for set values and present values for timers and counters can be changed from BCD mode (0000 to 9999) to binary method (0000 to FFFF) using the CX-Programmer

This setting is made in common for all tasks for all timers and counters.

1. Right-click ***New PLC*** in the project tree and select ***Properties***.

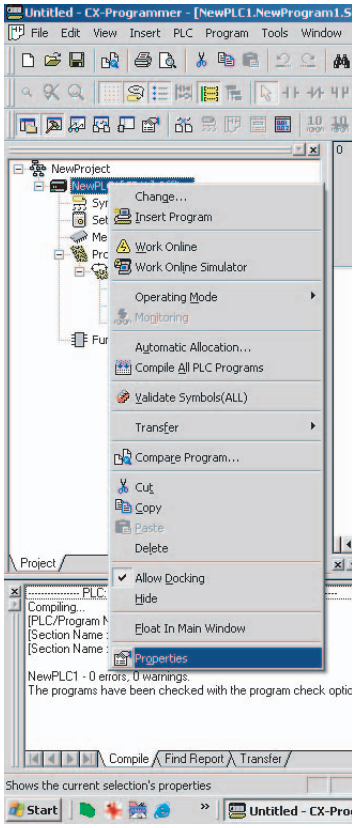

2. Select the *Execute Timer/Counter as Binary* Option in the PLC Properties Dialog Box. The timers and counters for all tasks will be executed in binary mode.

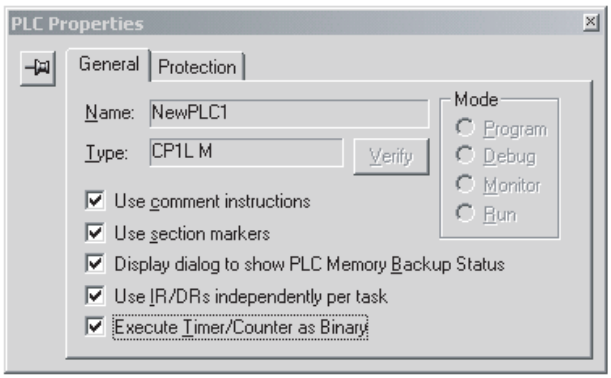

4-10 Data Memory Area (D)

CPU Units with 30, 40 or 60 I/O points: D0 to D32767

CPU Units with 10, 14 or 20 I/O points: D0 to D9999 and D32000 to D32767

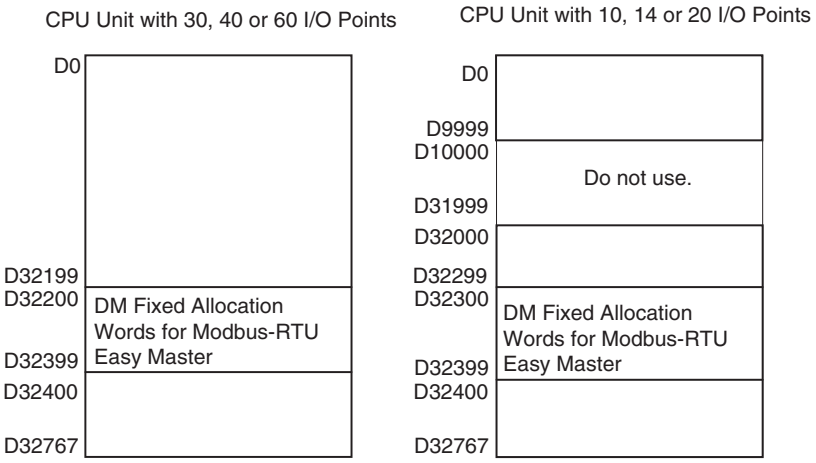

This data area is used for general data storage and manipulation and is accessible only by word.

Data in the DM Area is retained when the PLC's power is cycled or the PLC's operating mode is changed from PROGRAM mode to RUN/MONITOR mode or vice-versa.

Although bits in the DM Area cannot be accessed directly, the status of these bits can be accessed with the BIT TEST instructions, TST(350) and TSTN(351).

Forcing Bit Status

Bits in the DM Area cannot be force-set or force-reset.

Indirect Addressing

Words in the DM Area can be indirectly addressed in two ways: binary-mode and BCD-mode.

Binary-mode Addressing (@D)

When a "@" character is input before a DM address, the content of that DM word is treated as binary and the instruction will operate on the DM word at that binary address. The entire DM Area (D0 to D32767) can be indirectly addressed with hexadecimal values 0000 to 7FFF.

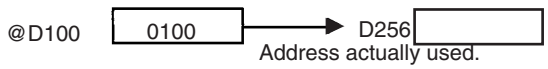

BCD-mode Addressing (*D)

When a "*" character is input before a DM address, the content of that DM word is treated as BCD and the instruction will operate on the DM word at that BCD address. Only part of the DM Area (D0 to D09999) can be indirectly addressed with BCD values 0000 to 9999.

Note (1) If an address between D10000 and D31999 is specified as an operand for a CPU Unit with 10, 14 or 20 I/O Points, an illegal area access error will occur.

(2) If two-word data is accessed from the last address in the DM Area (D9999 for the CP1L-L□D□-□ and D32767 for other CPU Units), the Access Error Flag (P_AER) will turn ON and the data at D9999 or D32767 will not be read or written.

DM Fixed Allocation Words for Modbus-RTU Easy Master

The following DM area words are used as command and response storage areas for the Modbus-RTU Easy Master function.

D32200 to D32299: Serial port 1 on CP1L CPU Unit with M CPU type

D32300 to D32399: Serial port 2 on CP1L CPU Unit with M CPU type and serial port 1 on CP1L CPU Unit with L CPU type

For use of these areas, refer to *6-3-3 Modbus-RTU Easy Master Function*.

4-11 Index Registers

The sixteen Index Registers (IR0 to IR15) are used for indirect addressing. Each Index Register can hold a single PLC memory address, which is the absolute memory address of a word in I/O memory. Use MOVR(560) to convert a regular data area address to its equivalent PLC memory address and write that value to the specified Index Register. (Use MOVRW(561) to set the PLC memory address of a timer/counter PV in an Index Register.)

Note Refer to *Appendix E Memory Map* for more details on PLC memory addresses.

Indirect Addressing

When an Index Register is used as an operand with a "," prefix, the instruction will operate on the word indicated by the PLC memory address in the Index Register, not the Index Register itself. Basically, the Index Registers are I/O memory pointers.

- All addresses in I/O memory (except Index Registers, Data Registers, and Condition Flags) can be specified seamlessly with PLC memory addresses. It isn't necessary to specify the data area. I/O memory addresses for IR, DR, and Condition Flags, however, cannot be held.
- In addition to basic indirect addressing, the PLC memory address in an Index Register can be offset with a constant or Data Register, auto-incremented, or auto-decremented. These functions can be used in loops to read or write data while incrementing or decrementing the address by one each time that the instruction is executed.

With the offset and increment/decrement variations, the Index Registers can be set to base values with MOVR(560) or MOVRW(561) and then modified as pointers in each instruction.

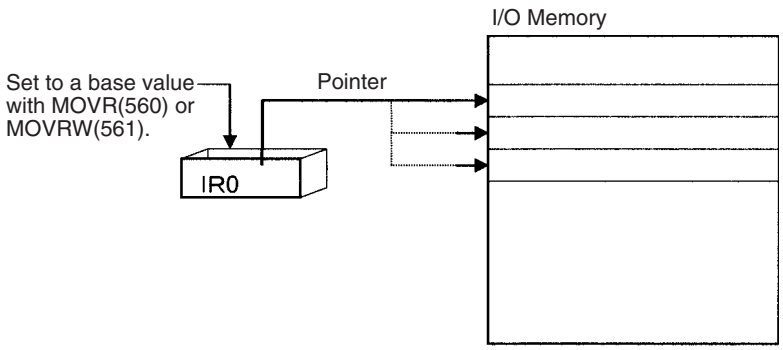

Note (1) It is possible to specify regions outside of I/O memory and generate an Illegal Access Error when indirectly addressing memory with Index Registers. Refer to *Appendix E Memory Map* for details on the limits of PLC memory addresses.

(2) When an Instruction Execution Error or an Illegal Access Error is generated during the execution of a certain instruction, the auto-increment/decrement for the rest Index Registers of the instruction will not execute.

(3) An Illegal Access Error will be generated when indirectly addressing memory in D10000 to D31999 with Index Registers for CPU Units with 10, 14 or 20 I/O Points.

The following table shows the variations available when indirectly addressing I/O memory with Index Registers. (IR□ represents an Index Register from IR0 to IR15.)

Variation	Function	Syntax	Example	
Indirect addressing	The content of IR□ is treated as the PLC memory address of a bit or word.	,IR□	LD ,IR0	Loads the bit at the PLC memory address contained in IR0.
Indirect addressing with constant offset	The constant prefix is added to the content of IR□ and the result is treated as the PLC memory address of a bit or word. The constant may be any integer from –2,048 to 2,047.	Constant ,IR□ (Include a + or – in the constant.)	LD +5,IR0	Adds 5 to the contents of IR0 and loads the bit at that PLC memory address.
Indirect addressing with DR offset	The content of the Data Register is added to the content of IR□ and the result is treated as the PLC memory address of a bit or word.	DR□,IR□	LD DR0,IR0	Adds the contents of DR0 to the contents of IR0 and loads the bit at that PLC memory address.
Indirect addressing with auto-increment	After referencing the content of IR□ as the PLC memory address of a bit or word, the content is incremented by 1 or 2.	Increment by 1: ,IR□+ Increment by 2: ,IR□++	LD , IR0++	Loads the bit at the PLC memory address contained in IR0 and then increments the content of IR0 by 2.
Indirect addressing with auto-decrement	The content of IR□ is decremented by 1 or 2 and the result is treated as the PLC memory address of a bit or word.	Decrement by 1: ,–IR□ Decrement by 2: ,– –IR□	LD , – –IR0	Decrements the content of IR0 by 2 and then loads the bit at that PLC memory address.

Example

This example shows how to store the PLC memory address of a word (CIO 2) in an Index Register (IR0), use the Index Register in an instruction, and use the auto-increment variation.

MOVR(560)	2	IR0	Stores the PLC memory address of CIO 2 in IR0.
MOV(021)	#0001	,IR0	Writes #0001 to the PLC memory address contained in IR0.
MOV(021)	#0020	+1,IR0	Reads the content of IR0, adds 1, and writes #0020 to that PLC memory address.

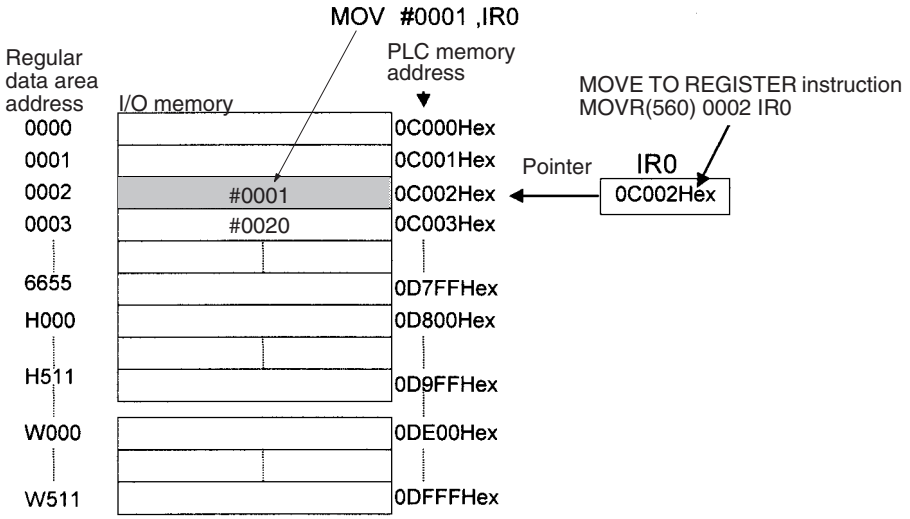

Note The PLC memory addresses are listed in the diagram above, but it isn't necessary to know the PLC memory addresses when using Index Registers.

Since some operands are treated as word data and others are treated as bit data, the meaning of the data in an Index Register will differ depending on the operand in which it is used.

1,2,3... 1. Word Operand:

```
MOVR(560)    0000      IR2
MOV(021)     D0        , IR2
```

When the operand is treated as a word, the contents of the Index Register are used "as is" as the PLC memory address of a word.
In this example MOVR(560) sets the PLC memory address of CIO 2 in IR2 and the MOV(021) instruction copies the contents of D0 to CIO 2.

2. Bit Operand:

```
MOVR(560)    000013    ,IR2
SET          +5 , IR2
```

When the operand is treated as a bit, the leftmost 7 digits of the Index Register specify the word address and the rightmost digit specifies the bit number. In this example, MOVR(560) sets the PLC memory address of CIO 13 (0C00D hex) in IR2. The SET instruction adds +5 from bit 13 (D hex) to this PLC memory address, so it turns ON bit CIO 1.02.

Index Register Initialization

The Index Registers will be cleared in the following cases:

1. When the operating mode is changed from PROGRAM to RUN or MONITOR mode or vice-versa
2. When the power is cycled

Setting Index Registers

Always set the required value in an index register before using it. The contents of an index register will be unpredictable if it is not set in advance.

The contents of an index register is also unpredictable after an interrupt task is started. When using index registers inside an interrupt task, use MOVR(560) (for anything but timer/counter PVs) or MOVRW(561) (for timer/counter PVs) to set the required value.

Direct Addressing

When an Index Register is used as an operand without a "," prefix, the instruction will operate on the contents of the Index Register itself (a two-word or "double" value). Index Registers can be directly addressed only in the instructions shown in the following table. Use these instructions to operate on the Index Registers as pointers.

The Index Registers cannot be directly addressed in any other instructions, although they can usually be used for indirect addressing.

Instruction group	Instruction name	Mnemonic
Data Movement Instructions	MOVE TO REGISTER	MOVR(560)
	MOVE TIMER/COUNTER PV TO REGISTER	MOVRW(561)
	DOUBLE MOVE	MOVL(498)
	DOUBLE DATA EXCHANGE	XCGL(562)
Table Data Processing Instructions	SET RECORD LOCATION	SETR(635)
	GET RECORD NUMBER	GETR(636)
Increment/Decrement Instructions	DOUBLE INCREMENT BINARY	++L(591)
	DOUBLE DECREMENT BINARY	– –L(593)
Comparison Instructions	DOUBLE EQUAL	=L(301)
	DOUBLE NOT EQUAL	< >L(306)
	DOUBLE LESS THAN	< L(311)
	DOUBLE LESS THAN OR EQUAL	< =L(316)
	DOUBLE GREATER THAN	> L(321)
	DOUBLE GREATER THAN OR EQUAL	> =L(326)
	DOUBLE COMPARE	CMPL(060)
Symbol Math Instructions	DOUBLE SIGNED BINARY ADD WITHOUT CARRY	+L(401)
	DOUBLE SIGNED BINARY SUBTRACT WITHOUT CARRY	–L(411)

The SRCH(181), MAX(182), and MIN(183) instructions can output the PLC memory address of the word with the desired value (search value, maximum, or minimum) to IR0. In this case, IR0 can be used in later instructions to access the contents of that word.

4-11-1 Using Index Registers

Processing of multiple (identical) instructions such as consecutive addresses for table data can be merged into one instruction by combining repetitive processing (e.g., FOR(513) and NEXT(514)instructions) with indirect addressing using Index Registers, thereby simplifying programming.

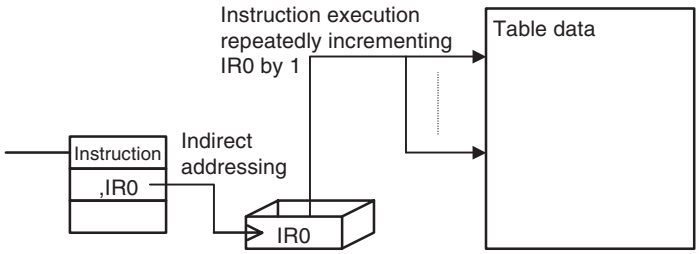

The Index operation uses the following procedure.

1. PLC memory addresses for the addresses in the Index Registers are stored using a MOVR instruction.
2. Operation is then executed by indirectly addressing Index Registers to the operand for Instruction A.
3. The addresses are moved using processing such as adding, subtracting, incrementing, or decrementing the Index Register (see note).
4. Steps 2 and 3 are processed repeatedly until the conditions are met.

Note Adding, subtracting incrementing, or decrementing for the Index Register is performed using one of the following methods.

- Each Type of Indirect Addressing for Index Registers:
  Auto-increment (,IR□+ or ,IR□++), auto-decrement (,-IR□ or ,--IR□), constant offset (constant ,IR□), and DR offset (DR□,IR□) for Index Registers
- Instructions for Direct Addressing of Index Registers:
  DOUBLE SIGNED BINARY ADD WITHOUT CARRY (+L), DOUBLE SIGNED BINARY SUBTRACT WITHOUT CARRY (-L), DOUBLE INCREMENT BINARY (++L), DOUBLE DECREMENT BINARY (--L)

Example:

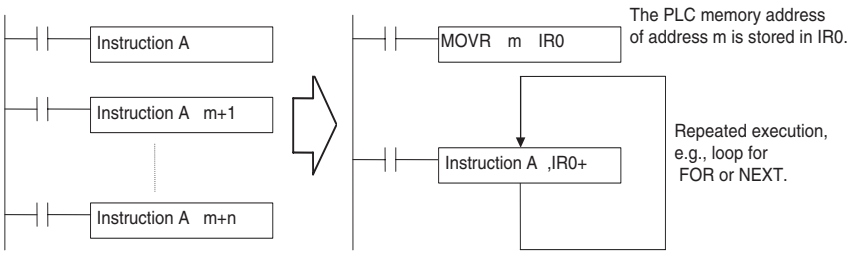

If, for example, instruction A above is a comparison instruction, table data could be read from start to the end of the table to compare all of the data with a specific value. In this way, blocks of user-defined processing can be freely created depending by applying Index Registers.

■ Example Using Index Registers

In the following example, TIM instructions for timer numbers 0 to 99 use set values in D100 to D199. This can be achieved by using one TIM instruction, using an index register for the timer number, using another index register for the Completion Flags, and repeatedly executing the TIM instruction to start the timers.

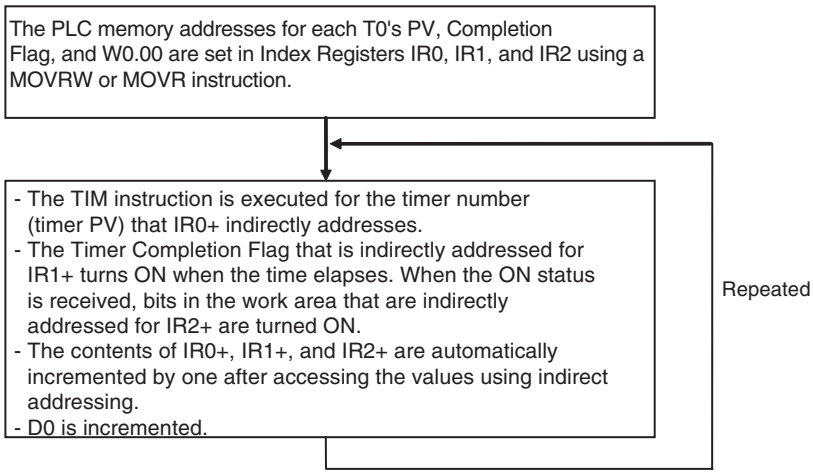

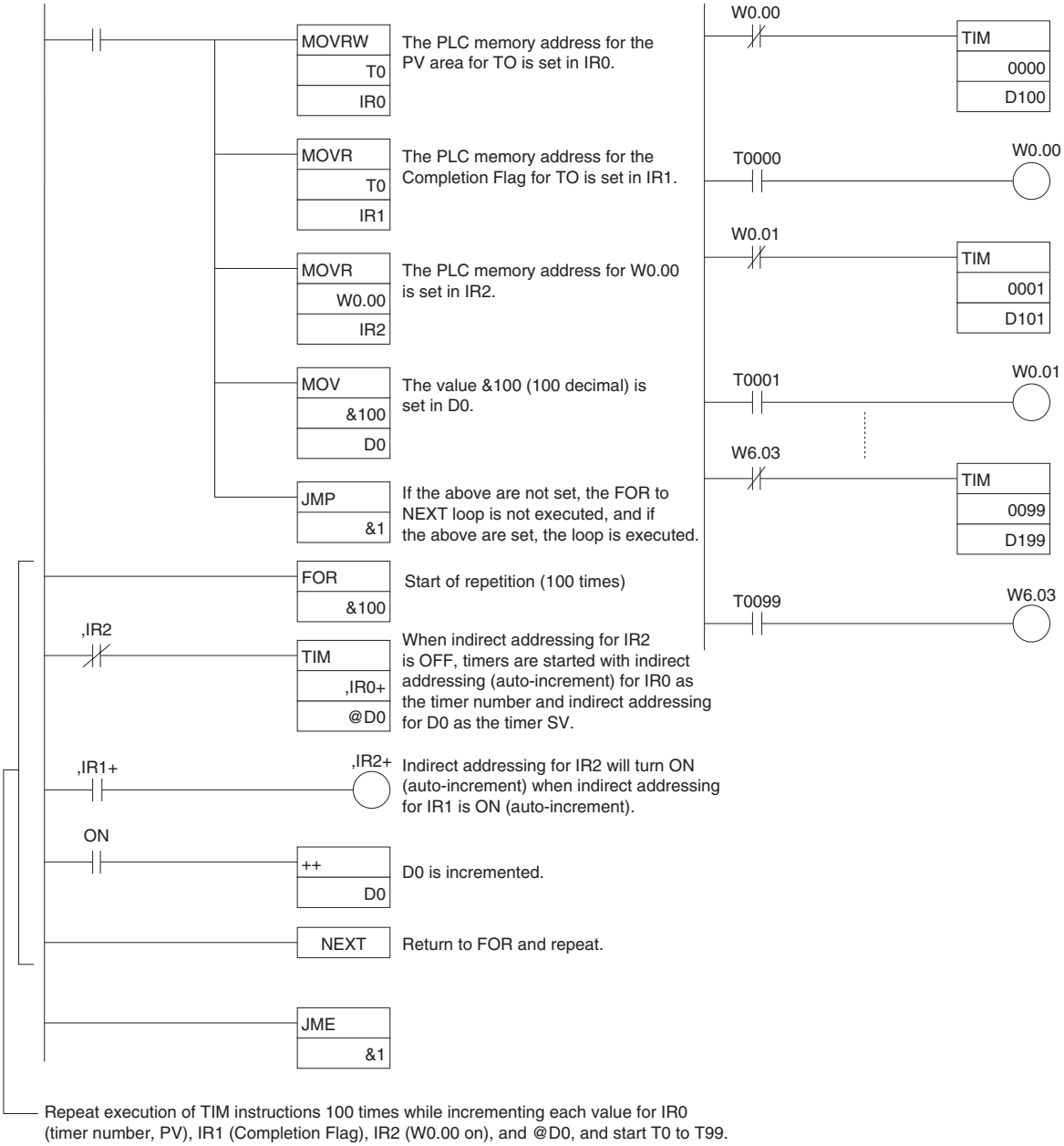

4-11-2 Precautions for Using Index Registers

Precautions

Do not use a Index Register until a PLC memory address has been set in the register. The pointer operation will be unreliable if the registers are used without setting their values.

The values in Index Registers are unpredictable at the start of an interrupt task. When an Index Register will be used in an interrupt task, always set a PLC memory address in the Index Register with MOVR(560) or MOVRW(561) before using the register in that task.

Each Index Register task is processed independently, so they do not affect each other. For example, IR0 used in Task 1 and IR0 used in Task 2 are different. Consequently, each Index Register task has 16 Index Registers.

Limitations when Using Index Registers

- It is only possible to read the Index Register for the last task executed within the cycle from the CX-Programmer. If using Index Registers with the same number to perform multiple tasks, it is only possible with the CX-Programmer to read the Index Register value for the last task performed within the cycle from the multiple tasks, nor is it possible to write the Index Register value from the CX-Programmer.
- It is not possible to either read or write to the Index Registers using Host Link commands or FINS commands.
- A setting can be made from the CX-Programmer to share Index Registers between tasks. This setting will be enabled uniformly for all Index Registers and Data Registers.

Sharing Index Registers

The following setting can be made from the PLC Properties Dialog Box on the CX-Programmer to control sharing Index and Data Registers between tasks.

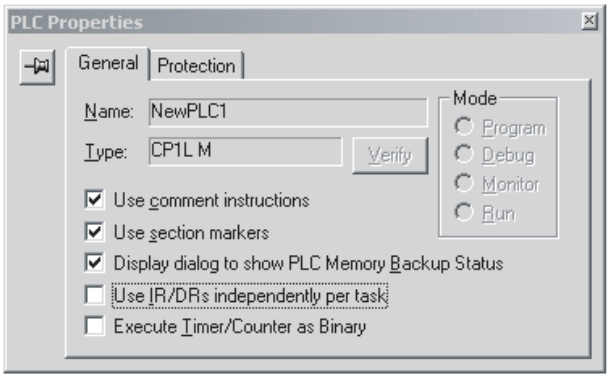

Monitoring Index Registers

It is possible to monitor Index Registers as follows:

To use the Programming Devices to monitor the final Index Register values for each task, or to monitor the Index Register values using Host Link commands or FINS commands, write a program to store Index Register values from each task to another area (e.g., DM area) at the end of each task, and to read Index Register values from the storage words (e.g., DM area) at the beginning of each task. The values stored for each task in other areas (e.g., DM area) can then be edited using the CX-Programmer, Host Link commands, or FINS commands.

Note Be sure to use PLC memory addresses in Index Registers.

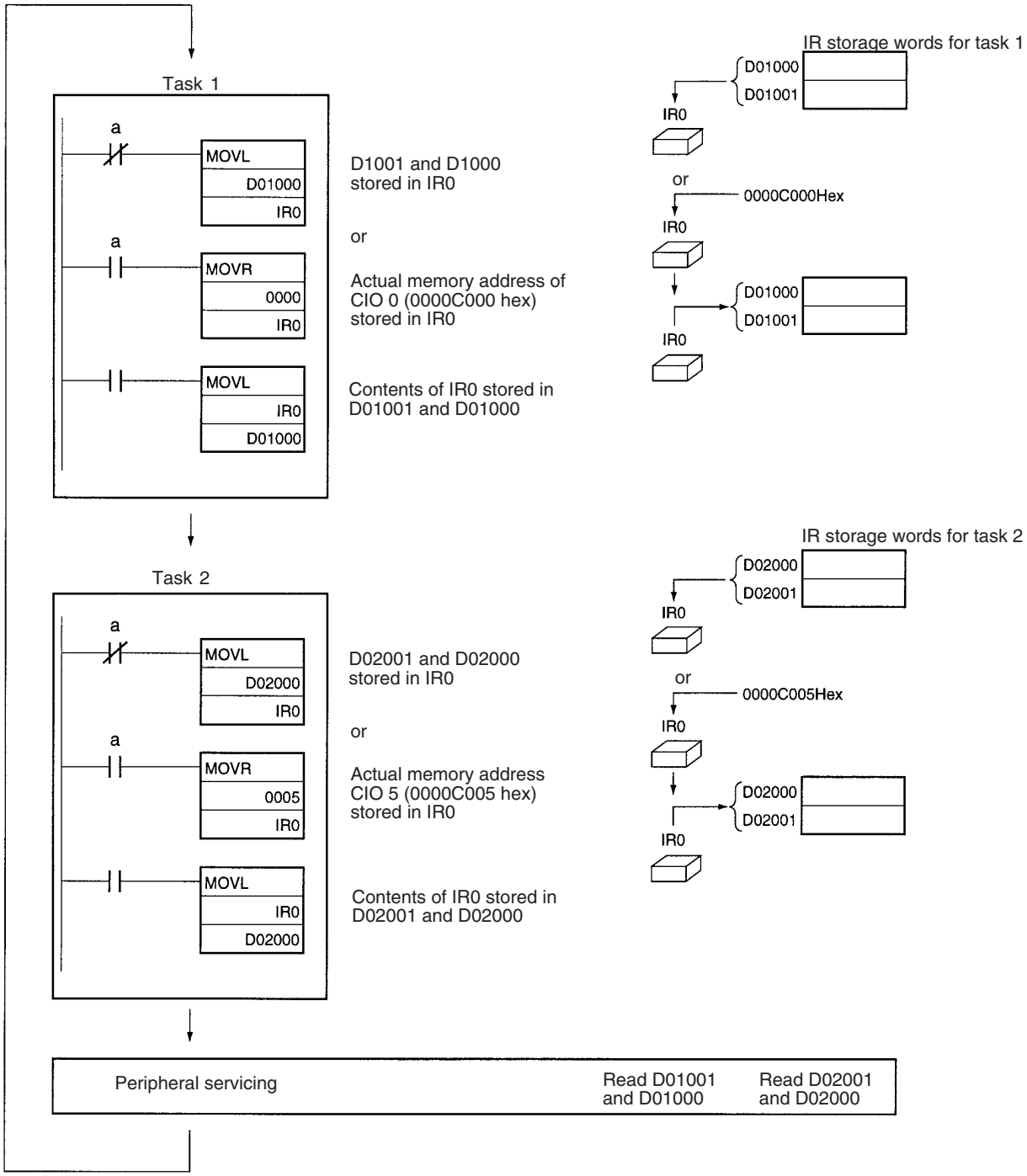

4-12 Data Registers

The sixteen Data Registers (DR0 to DR15) are used to offset the PLC memory addresses in Index Registers when addressing words indirectly.

The value in a Data Register can be added to the PLC memory address in an Index Register to specify the absolute memory address of a bit or word in I/O memory. Data Registers contain signed binary data, so the content of an Index Register can be offset to a lower or higher address.

Normal instructions can be used to store data in Data Registers.

Forcing Bit Status

Bits in Data Registers cannot be force-set and force-reset.

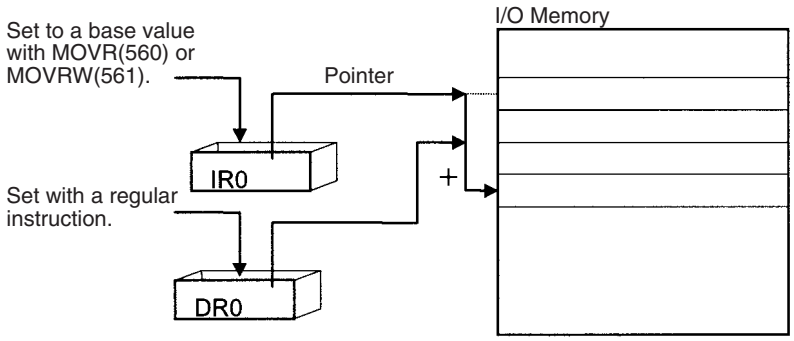

Examples

The following examples show how Data Registers are used to offset the PLC memory addresses in Index Registers.

LD DR0 ,IR0	Adds the contents of DR0 to the contents of IR0 and loads the bit at that PLC memory address.
MOV(021) #0001 DR0 ,IR1	Adds the contents of DR0 to the contents of IR1 and writes #0001 to that PLC memory address.

Range of Values

The contents of data registers are treated as signed binary data and thus have a range of –32,768 to 32,767.

Hexadecimal content	Decimal equivalent
8000 to FFFF	–32,768 to –1
0000 to 7FFF	0 to 32,767

Data Register Initialization

The Data Registers will be cleared in the following cases:

1. When the operating mode is changed from PROGRAM mode to RUN/MONITOR mode or vice-versa and the IOM Hold Bit is OFF
2. When the power is cycled and the IOM Hold Bit is OFF or not protected in the PLC Setup

IOM Hold Bit Operation

If the IOM Hold Bit (A500.12) is ON, the Data Registers won't be cleared when a FALS error occurs or the operating mode is changed from PROGRAM mode to RUN/MONITOR mode or vice-versa.

If the IOM Hold BIt (A500.12) is ON and the PLC Setup's "IOM Hold Bit Status at Startup" setting is set to protect the IOM Hold Bit, the Data Registers won't be cleared when the PLC's power supply is reset (ON →OFF →ON).

Precautions

Data Registers are normally local to each task. For example, DR0 used in task 1 is different from DR0 used in task 2. (A PLC Setup setting can be made from the CX-Programmer to share Data Registers between tasks.)

The content of Data Registers cannot be accessed (read or written) from the CX-Programmer.

Do not use Data Registers until a value has been set in the register. The register's operation will be unreliable if they are used without setting their values.

The values in Data Registers are unpredictable at the start of an interrupt task. When a Data Register will be used in an interrupt task, always set a value in the Data Register before using the register in that task.

4-13 Task Flags

Task Flags range from TK00 to TK31 and correspond to cyclic tasks 0 to 31. A Task Flag will be ON when the corresponding cyclic task is in executable (RUN) status and OFF when the cyclic task hasn't been executed (INI) or is in standby (WAIT) status.

Note These flags indicate the status of cyclic tasks only, they do not reflect the status of interrupt tasks.

Task Flag Initialization

The Task Flags will be cleared in the following cases, regardless of the status of the IOM Hold Bit.

1. When the operating mode is changed from PROGRAM mode to RUN/MONITOR mode or vice-versa
2. When the power is cycled.

Forcing Bit Status

The Task Flags **cannot** be force-set and force-reset.

4-14 Condition Flags

These flags include the Arithmetic Flags, such as the Error Flag and Equals Flag, which indicate the results of instruction execution.

The Condition Flags are specified with symbols, such as P_CY and P_ER, rather than addresses. The status of these flags reflects the results of instruction execution, but the flags are read-only; they cannot be written directly from instructions or the CX-Programmer.

Note The CX-Programmer treats condition flags as global symbols beginning with P_.

All Condition Flags are cleared when the program switches tasks, so the status of the ER and AER flags are maintained only in the task in which the error occurred.

Forcing Bit Status

The Condition Flags **cannot** be force-set and force-reset.

Summary of the Condition Flags

The following table summarizes the functions of the Condition Flags, although the functions of these flags will vary slightly from instruction to instruction. Refer to the description of the instruction for complete details on the operation of the Condition Flags for a particular instruction.

Name	Symbol	Function
Error Flag	P_ER	Turned ON when the operand data in an instruction is incorrect (an instruction processing error) to indicate that an instruction ended because of an error. When the PLC Setup is set to stop operation for an instruction error (Instruction Error Operation), program execution will be stopped and the Instruction Processing Error Flag (A29508) will be turned ON when the Error Flag is turned ON.
Access Error Flag	P_AER	Turned ON when an Illegal Access Error occurs. The Illegal Access Error indicates that an instruction attempted to access an area of memory that should not be accessed. When the PLC Setup is set to stop operation for an instruction error (Instruction Error Operation), program execution will be stopped and the Instruction Processing Error Flag (A429510) will be turned ON when the Access Error Flag is turned ON.

Name	Symbol	Function
Carry Flag	P_CY	Turned ON when there is a carry in the result of an arithmetic operation or a "1" is shifted to the Carry Flag by a Data Shift instruction. The Carry Flag is part of the result of some Data Shift and Symbol Math instructions.
Greater Than Flag	P_GT	Turned ON when the first operand of a Comparison Instruction is greater than the second or a value exceeds a specified range.
Equals Flag	P_EQ	Turned ON when the two operands of a Comparison Instruction are equal the result of a calculation is 0.
Less Than Flag	P_LT	Turned ON when the first operand of a Comparison Instruction is less than the second or a value is below a specified range.
Negative Flag	P_N	Turned ON when the most significant bit (sign bit) of a result is ON.
Overflow Flag	P_OF	Turned ON when the result of calculation overflows the capacity of the result word(s).
Underflow Flag	P_UF	Turned ON when the result of calculation underflows the capacity of the result word(s).
Greater Than or Equals Flag	P_GE	Turned ON when the first operand of a Comparison Instruction is greater than or equal to the second.
Not Equal Flag	P_NE	Turned ON when the two operands of a Comparison Instruction are not equal.
Less Than or Equals Flag	P_LE	Turned ON when the first operand of a Comparison Instruction is less than or equal to the second.
Always ON Flag	P_On	Always ON. (Always 1.)
Always OFF Flag	P_Off	Always OFF. (Always 0.)

Using the Condition Flags

The Condition Flags are shared by all of the instructions, so their status may change often in a single cycle. Be sure to read the Condition Flags immediately after the execution of instruction, preferably in a branch from the same execution condition.

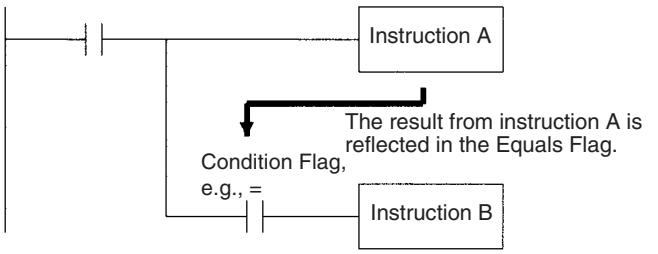

Instruction	Operand
LD	
Instruction A	
AND	=
Instruction B	

Since the Condition Flags are shared by all of the instructions, program operation can be changed from its expected course by interruption of a single task. Be sure to consider the effects of interrupts when writing the program. Refer to *SECTION 2 Programming* of *CS/CJ Series Programming Manual* (W394) for more details.

The Condition Flags are cleared when the program switches tasks, so the status of a Condition Flag cannot be passed to another task. For example the status of a flag in task 1 cannot be read in task 2.

Saving and Loading Condition Flag Status

The CP1-H CPU Units support instructions to save and load the Condition Flag status (CCS(282) and CCL(283)). These can be used to access the status of the Condition Flags at other locations in a task or in a different task.

The following example shows how the Equals Flag is used at a different location in the same task.

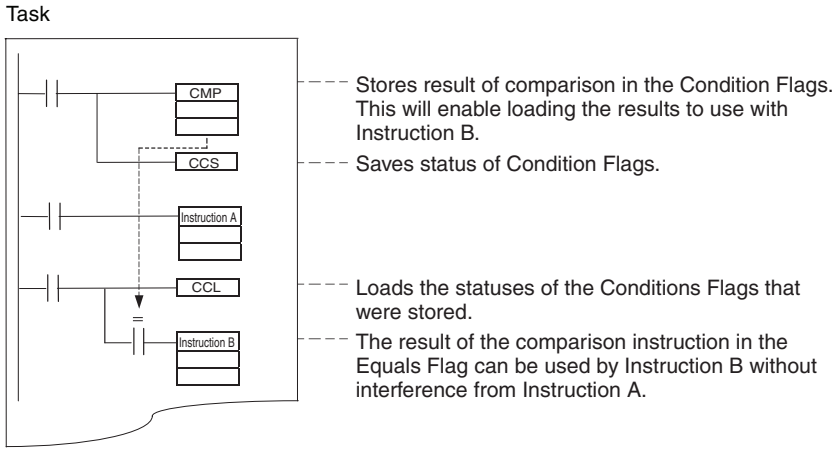

4-15 Clock Pulses

The Clock Pulses are flags that are turned ON and OFF at regular intervals by the system.

Name	Symbol	Operation	
0.02 s Clock Pulse	P_0_02_s		ON for 0.01 s OFF for 0.01 s
0.1 s Clock Pulse	P_0_1s	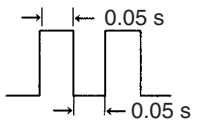	ON for 0.05 s OFF for 0.05 s
0.2 s Clock Pulse	P_0_2s	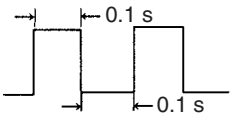	ON for 0.1 s OFF for 0.1 s
1 s Clock Pulse	P_1s	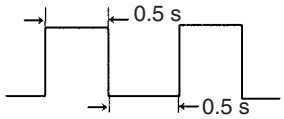	ON for 0.5 s OFF for 0.5 s
1 min Clock Pulse	P_1min	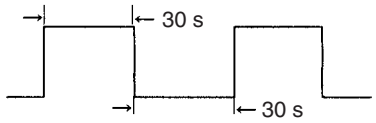	ON for 30 s OFF for 30 s

The Clock Pulses are specified with symbols rather than addresses.

Note The CX-Programmer treats condition flags as global symbols beginning with P_.

The Clock Pulses are read-only; they cannot be overwritten from instructions or the CX-Programmer.

The Clock Pulses are cleared at the start of operation.

Using the Clock Pulses

The following example turns CIO 100.00 ON and OFF at 0.5 s intervals.

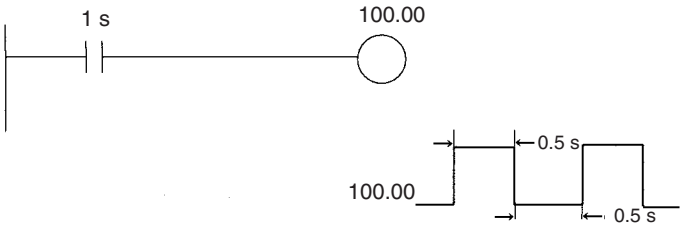

Instruction	Operand
LD	1 s
OUT	100.00

SECTION 5
Pulse and Counter Functions

This section describes the CP1L's interrupt and high-speed counter functions.

5-1 High-speed Counters . . . 176
5-1-1 Overview . . . 176
5-1-2 High-speed Counter Specifications . . . 177
5-1-3 Procedure . . . 182
5-1-4 PLC Setup . . . 183
5-1-5 High-speed Counter Terminal Allocation . . . 184
5-1-6 Pulse Input Connection Examples . . . 190
5-1-7 Ladder Program Example . . . 190
5-1-8 Additional Capabilities and Restrictions . . . 193
5-2 Pulse Outputs . . . 197
5-2-1 Overview . . . 197
5-2-2 Pulse Output Specifications . . . 200
5-2-3 Pulse Output Terminal Allocations . . . 201
5-2-4 Pulse Output Patterns . . . 208
5-2-5 Origin Search and Origin Return Functions . . . 220
5-2-6 Origin Return . . . 237
5-2-7 Pulse Output Procedures . . . 239
5-2-8 Instructions Used for Pulse Outputs . . . 241
5-2-9 Variable Duty Factor Pulse Outputs (PWM(891) Outputs) . . . 250
5-2-10 Example Pulse Output Applications . . . 250
5-3 Inverter Positioning . . . 280
5-3-1 Features . . . 280
5-3-2 System Configuration . . . 283
5-3-3 Functional Overview . . . 284
5-3-4 Specifications . . . 286
5-3-5 Application Procedure for Inverter Positioning . . . 288
5-3-6 Instruction Specifications . . . 289
5-3-7 Determining the Internal Pulse Output Frequency . . . 295
5-3-8 PLC Setup . . . 297
5-3-9 Automatic Calculation of Inverter Frequency Command Value . . . 302
5-3-10 Memory Allocations . . . 305
5-3-11 Application Example with Serial Communications . . . 317
5-3-12 Application Example with an Analog Output . . . 327
5-3-13 Supplemental Information . . . 336

5-1 High-speed Counters

5-1-1 Overview

- A rotary encoder can be connected to a built-in input to produce a high-speed pulse input.
- The PRV(881) instruction can be used to measure the input pulse frequency (one input only).
- The high-speed counter PVs can be maintained or refreshed.
- The High-speed Counter Gate Bit can be turned ON/OFF from the ladder program to select whether the high-speed counter PVs will be maintained or refreshed.
- Any one of the following input signals can be selected as the counter input mode.

  Response Frequencies for 24 VDC Inputs to High-speed Counters 0 and 1:
  - Differential phase inputs (4x): 50 kHz
  - Pulse + direction inputs: 100 kHz
  - Up/Down pulse inputs: 100 kHz
  - Increment pulse inputs: 100 kHz
- The counting mode can be set to linear mode or circular (ring) mode.
- The counter reset method can be set to Z phase signal + software reset, software reset, Z phase signal + software reset (continue comparing), or software reset (continue comparing).

Pulse Input Functions

Purpose	Function used	Description
Receive incremental rotary encoder inputs to calculate length or position.	High-speed counter function	Built-in input terminals can be used for high-speed counter inputs. The PV for the high-speed counters are stored in the Auxiliary Area. The counters can be operated in ring mode or linear mode.
Measure a workpiece's length or position. (Start counting when a certain condition is established or pause counting when a certain condition is established.)	High-speed Counter Gate Bit	The high-speed counter can be started or stopped (PV held) from the Unit's program by turning ON/OFF the High-speed Counter Gate Bit when the desired condition is met.
Measure a workpiece's speed from its position data (frequency measurement.)	PRV(881) HIGH-SPEED COUNTER PV READ	The PRV(881) instruction can be used to measure the pulse frequency. • Range with differential phase inputs: 0 to 50 kHz (Y models: 0 to 500 kHz) • Range with all other input modes: 0 to 100 kHz (Y models: 0 to 1 MHz)
	PRV2(883) PULSE FREQUENCY CONVERT	PRV2(883) reads the pulse frequency and converts it to a rotational speed (r/min) or it converts the counter PV to a total number of rotations. Results are calculated by the number of pulses/rotation.

5-1-2 High-speed Counter Specifications

Specifications

Item		Specification			
Number of high-speed counters		2 (High-speed counters 0 and 1)			4 (High-speed counters 0 to 3)
Pulse input modes (Selected in the PLC Setup)		Differential phase inputs	Up/down inputs	Pulse + direction inputs	Increment inputs
Input terminal allocation		Phase-A input	Increment pulse input	Pulse input	Increment pulse input
		Phase-B input	Decrement pulse input	Direction input	---
		Phase-Z input	Reset input	Reset input	Reset input
Input method		Differential phase, 4x (Fixed)	Two single-phase inputs	Single-phase pulse + direction inputs	Single-phase input
Response frequency		50 kHz	100 kHz	100 kHz	100 kHz
Counting mode		Linear mode or circular (ring) mode (Select in the PLC Setup.)			
Count values		Linear mode: 8000 0000 to 7FFF FFFF hex Ring mode: 0000 0000 to Ring SV (The Ring SV (Circular Max. Count) is set in the PLC Setup and the setting range is 00000001 to FFFFFFFF hex.)			
High-speed counter PV storage locations		High-speed counter 0: A271 (leftmost 4 digits) and A270 (rightmost 4 digits) High-speed counter 1: A273 (leftmost 4 digits) and A272 (rightmost 4 digits) High-speed counter 2: A317 (leftmost 4 digits) and A316 (rightmost 4 digits) High-speed counter 3: A319 (leftmost 4 digits) and A318 (rightmost 4 digits) Target value comparison interrupts or range comparison interrupts can be executed based on these PVs. **Note** The PVs are refreshed in the overseeing processes at the start of each cycle. Use PRV(881) to read the most recent PVs.			
		Data format: 8 digit hexadecimal Range in linear mode: 8000 0000 to 7FFF FFFF hex Range in ring mode: 0000 0000 to Ring SV (Circular Max. Count)			
Control method	Target value comparison	Up to 48 target values and corresponding interrupt task numbers can be registered.			
	Range comparison	Up to 8 ranges can be registered, with a separate upper limit, lower limit, and interrupt task number for each range.			
Counter reset method		Select one of the following methods in the PLC Setup. •Phase-Z + Software reset The counter is reset when the phase-Z input goes ON while the Reset Bit is ON. •Software reset The counter is reset when the Reset Bit goes ON. (Set the counter reset method in the PLC Setup.) **Note** Operation can be set to stop or continue the comparison operation when the high-speed counter is reset.			

Auxiliary Area Data Allocation

Function		High-speed counter number			
		0	1	2	3
PV storage words	Leftmost 4 digits	A271	A273	A317	A319
	Rightmost 4 digits	A270	A272	A316	A318
Range Comparison Condition Met Flags	Range 1 Comparison Condition Met Flag	A274.00	A275.00	A320.00	A321.00
	Range 2 Comparison Condition Met Flag	A274.01	A275.01	A320.01	A321.01
	Range 3 Comparison Condition Met Flag	A274.02	A275.02	A320.02	A321.02
	Range 4 Comparison Condition Met Flag	A274.03	A275.03	A320.03	A321.03
	Range 5 Comparison Condition Met Flag	A274.04	A275.04	A320.04	A321.04
	Range 6 Comparison Condition Met Flag	A274.05	A275.05	A320.05	A321.05
	Range 7 Comparison Condition Met Flag	A274.06	A275.06	A320.06	A321.06
	Range 8 Comparison Condition Met Flag	A274.07	A275.07	A320.07	A321.07
Comparison In-progress Flags	ON when a comparison operation is being executed for the high-speed counter.	A274.08	A275.08	A320.08	A321.08
Overflow/Underflow Flags	ON when an overflow or underflow has occurred in the high-speed counter's PV. (Used only when the counting mode is set to Linear Mode.)	A274.09	A275.09	A320.09	A321.09
Count Direction Flags	0: Decrementing 1: Incrementing	A274.10	A275.10	A320.10	A321.10

Counter Input Modes

Differential Phase Mode (4x)

The differential phase mode uses two phase signals (phase A and phase B) and increments/decrements the count according to the status of these two signals.

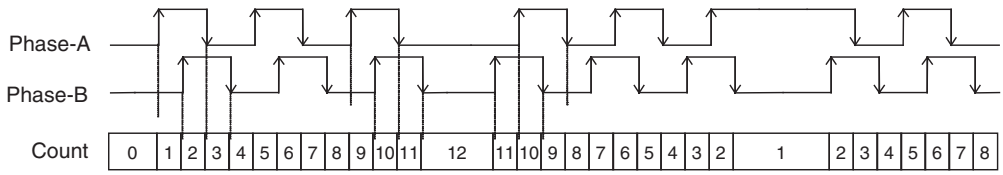

Conditions for Incrementing/Decrementing the Count

Phase A	Phase B	Count value
↑	L	Increment
H	↑	Increment
↓	H	Increment
L	↓	Increment
L	↑	Decrement
↑	H	Decrement
H	↓	Decrement
↓	L	Decrement

Pulse + Direction Mode

The pulse + direction mode uses a direction signal input and pulse signal input. The count is incremented or decremented depending on the status (ON or OFF) of the direction signal.

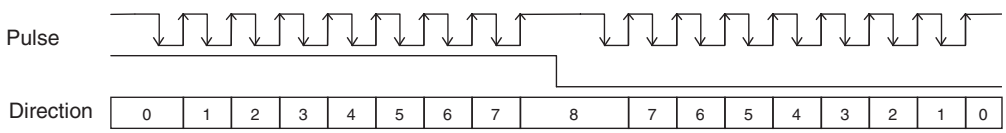

Conditions for Incrementing/Decrementing the Count

Direction signal	Pulse signal	Count value
↑	L	No change
H	↑	Increment
↓	H	No change
L	↓	No change
L	↑	Decrement
↑	H	No change
H	↓	No change
↓	L	No change

- The count is incremented when the direction signal is ON and decremented when it is OFF.
- Only up-differentiated pulses (rising edges) can be counted.

Up/Down Mode

The up/down mode uses two signals, an increment pulse input and a decrement pulse input.

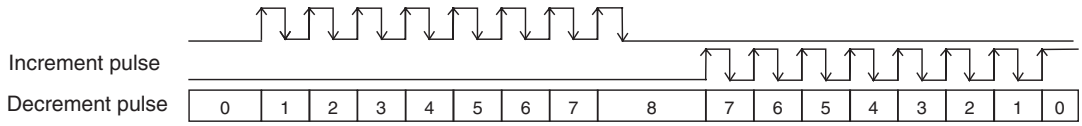

Conditions for Incrementing/Decrementing the Count

Decrement pulse	Increment pulse	Count value
↑	L	Decrement
H	↑	Increment
↓	H	No change
L	↓	No change
L	↑	Increment
↑	H	Decrement
H	↓	No change
↓	L	No change

- The count is incremented for each increment pulse input and decremented for each decrement pulse input.
- Only up-differentiated pulses (rising edges) can be counted.

Increment Mode

The increment mode counts single-phase pulse signal inputs. This mode only increments the count.

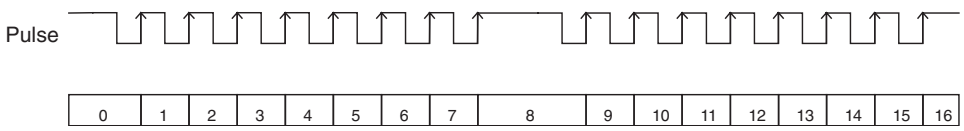

Conditions for Incrementing/Decrementing the Count

Pulse	Count value
↑	Increment
H	No change
↓	No change
L	No change

- Only up-differentiated pulses (rising edges) can be counted.

Note The count of the high-speed counter can be monitored to see if it is currently being incremented or decremented. The count in the current cycle is compared with the count in the previous cycle to determine if it is being incremented or decremented. The results are reflected in the High-speed Counter Count Direction Flags (A274.10 for high-speed counter 0, A275.10 for high-speed Counter 1, A320.10 for high-speed counter 2, and A321.10 for high-speed counter 3.)

Counting Modes

Linear Mode

Input pulses can be counted in the range between the lower limit and upper limit values. If the pulse count goes beyond the lower/upper limit, an underflow/overflow will occur and counting will stop.

Lower and Upper Limits of the Range

The following diagrams show the lower limit and upper limit values for increment mode and up/down mode.

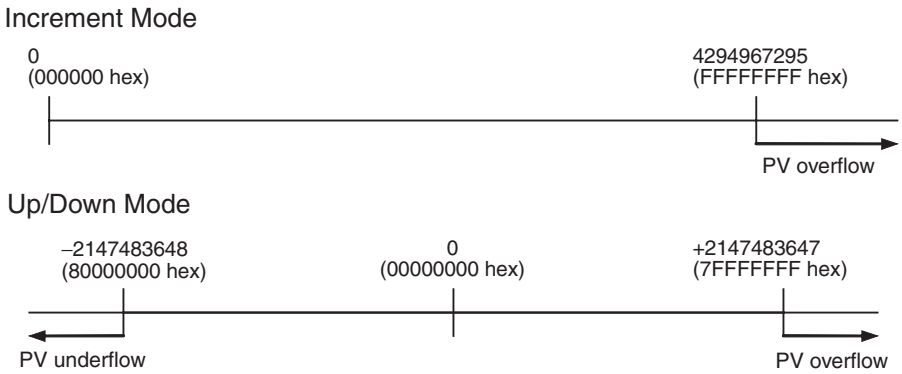

Circular (Ring) Mode

Input pulses are counted in a loop within the set range. The loop operates as follows:

- If the count is incremented from the max. ring count, the count will be reset to 0 automatically and incrementing will continue.
- If the count is decremented from 0, the count will be set to the max. ring count automatically and decrementing will continue.

Consequently, underflows and overflows cannot occur when ring mode is used.

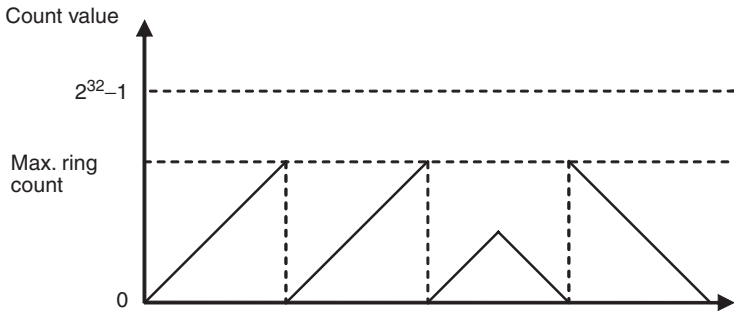

Max. Ring Count

Use the PLC Setup to set the max. ring count (Circular Max. Count), which is the max. value of the input pulse counting range. The max. ring count can be set to any value between 00000001 and FFFFFFFF hex.

Restrictions

- There are no negative values in ring mode.
- If the max. ring count is set to 0 in the PLC Setup, the counter will operate with a max. ring count of FFFFFFFF hex.

Reset Methods

Phase-Z Signal + Software Reset

The high-speed counter's PV is reset when the phase-Z signal (reset input) goes from OFF to ON while the corresponding High-speed Counter Reset Bit is ON.

The CPU Unit recognizes the ON status of the High-speed Counter Reset Bit only at the beginning of the PLC cycle during the overseeing processes. Consequently, when the Reset Bit is turned ON in the ladder program, the phase-Z signal does not become effective until the next PLC cycle.

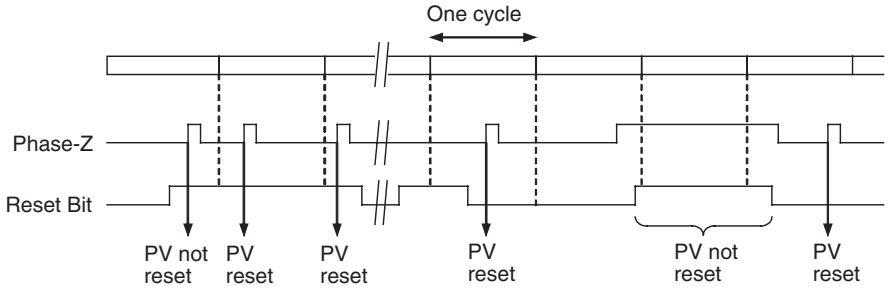

Software Reset

The high-speed counter's PV is reset when the corresponding High-speed Counter Reset Bit goes from OFF to ON.

The CPU Unit recognizes the OFF-to-ON transition of the High-speed Counter Reset Bit only at the beginning of the PLC cycle during the overseeing processes. Reset processing is performed at the same time. The OFF-to-ON transition will not be recognized if the Reset Bit goes OFF again within the same cycle.

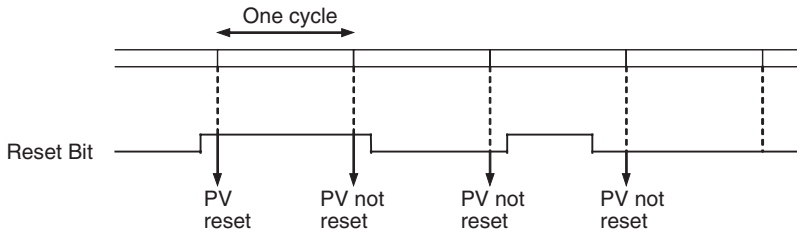

Note The comparison operation can be set to stop or continue when a high-speed counter is reset. This enables applications where the comparison operation can be restarted from a counter PV of 0 when the counter is reset.

5-1-3 Procedure

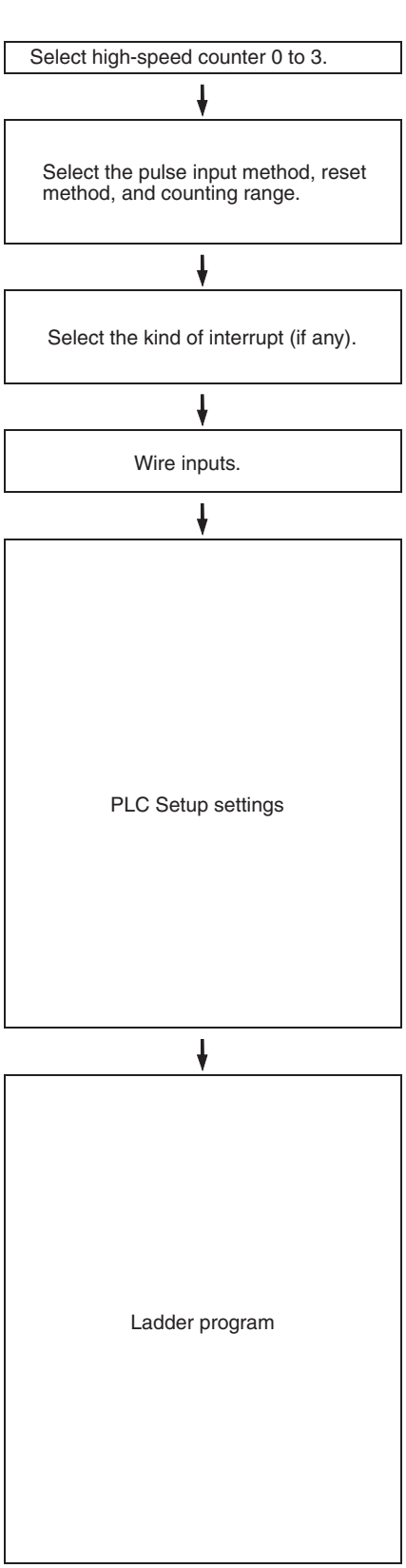

- High-speed counters 0 to 3: 24 VDC input, Response frequency: 50 kHz for single-phase, 100 kHz for differential phase

- Pulse input methods: Differential phase (4x), Pulse + direction, Up/Down, or Increment
- Reset methods: Phase-Z + Software reset, Software reset, Phase-Z + Software reset (continuing comparing), Software reset (continuing comparing)
- Counting ranges: Linear mode or Ring mode

- Enable/disable interrupts
- Target value comparison interrupt
- Range comparison interrupt

- Connect to the terminals (24 VDC input or line-driver)

- High-speed Counters 0 to 3 Enable/Disable:
- High-speed Counters 0 to 3Pulse Input Mode:
  Differential phase (4x)
  Pulse + direction
  Up/Down
  Increment
- High-speed Counters 0 to 3 Reset Method:
  Phase-Z + Software reset, Software reset, Phase-Z + Software reset (continuing comparing), Software reset (continuing comparing)
- High-speed Counters 0 to 3 Counting Mode:
  Linear mode
  Ring mode

- Program the interrupt task (with any interrupt number between 0 and 255) to be executed when using a target value comparison or range comparison interrupts.
- Register a target value comparison table and start the comparison.
- Register a range comparison table and start the comparison.
- Register a target value comparison table without starting the comparison.
- Register a range comparison table without starting the comparison.
- Change the counter PV.
- Start comparison with the registered target value comparison table or range comparison table.
- Read the high-speed counter PVs, read the status of the high-speed counter comparison operation, or read the range-comparison results.
- Turn ON the High-speed Counter Gate Bit to stop counting input pulses.

5-1-4 PLC Setup

The settings for high-speed counters 0 to 3 are located in the Built-in Input Tab of the CX-Programmer's PLC Settings Window.

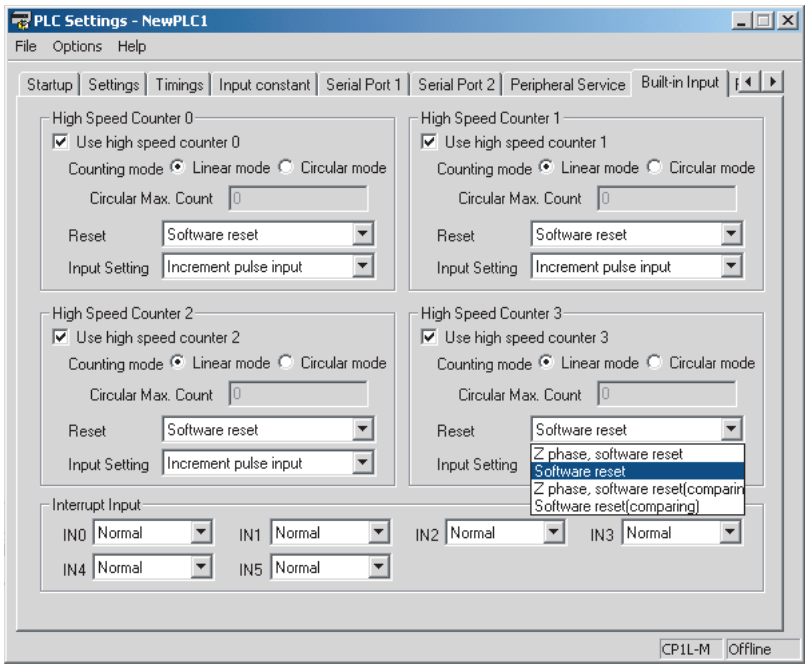

Settings in the Built-in Input Tab

Item	Setting
Use high speed counter 0 to 3	Use counter
Counting mode	Linear mode
	Circular mode (ring mode)
Circular Max. Count (max. ring count)	0 to 4,294,967,295 (0 to FFFF FFFF hex)
Reset method	Phase Z and software reset
	Software reset
	Phase Z and software reset (continue comparing)
	Software reset (continue comparing)
Input Setting	Differential phase inputs (4x)
	Pulse + direction inputs
	Up/Down inputs
	Increment pulse input

5-1-5 High-speed Counter Terminal Allocation

The following diagrams show the input terminals that can be used for high-speed counters in each CPU Unit.

Differential Phases, Up/ Down, or Pulse + Direction

Input Terminal Arrangement for CPU Units with 10 I/O Points

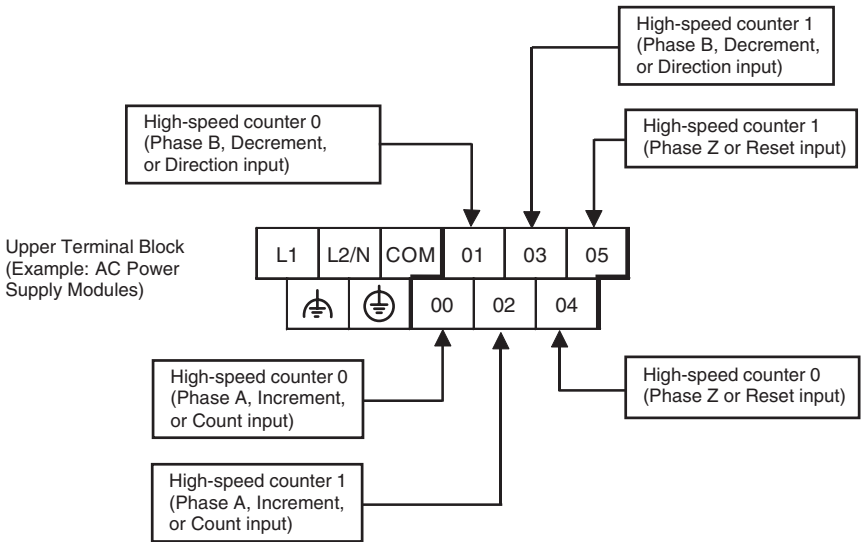

Input Terminal Arrangement for CPU Units with 14 I/O Points

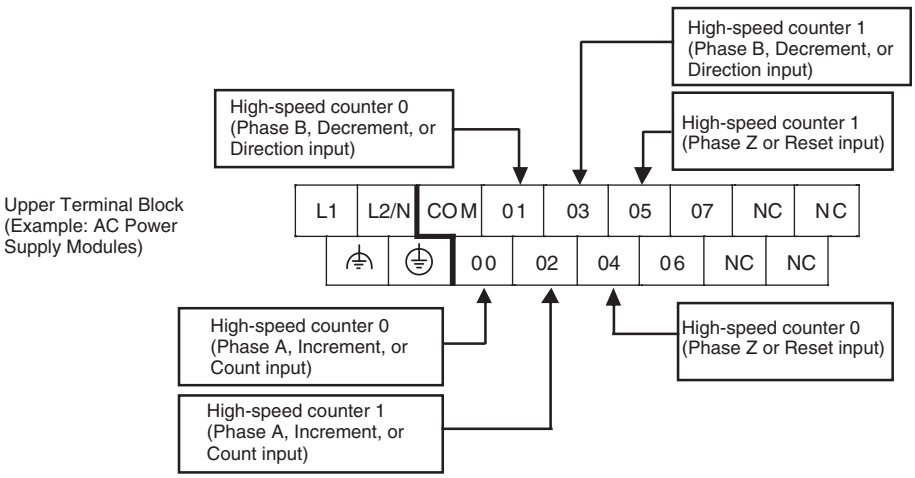

Input Terminal Arrangement for CPU Units with 20 I/O Points

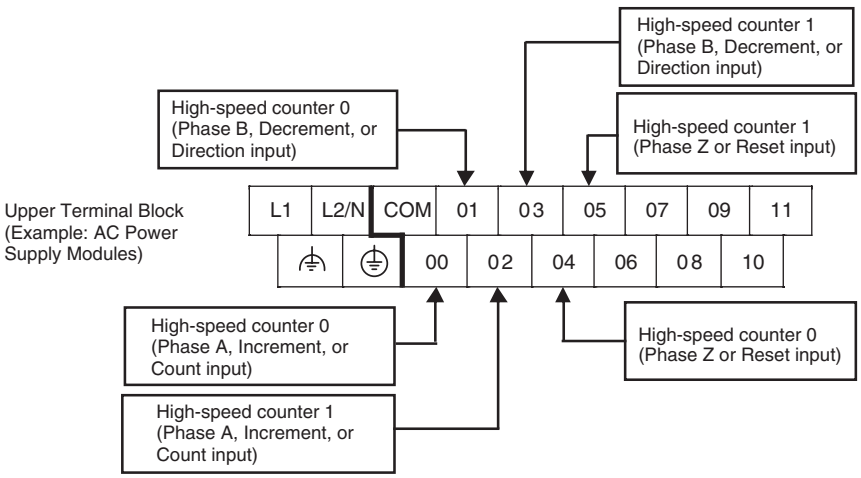

Input Terminal Arrangement for CPU Units with 30 I/O Points

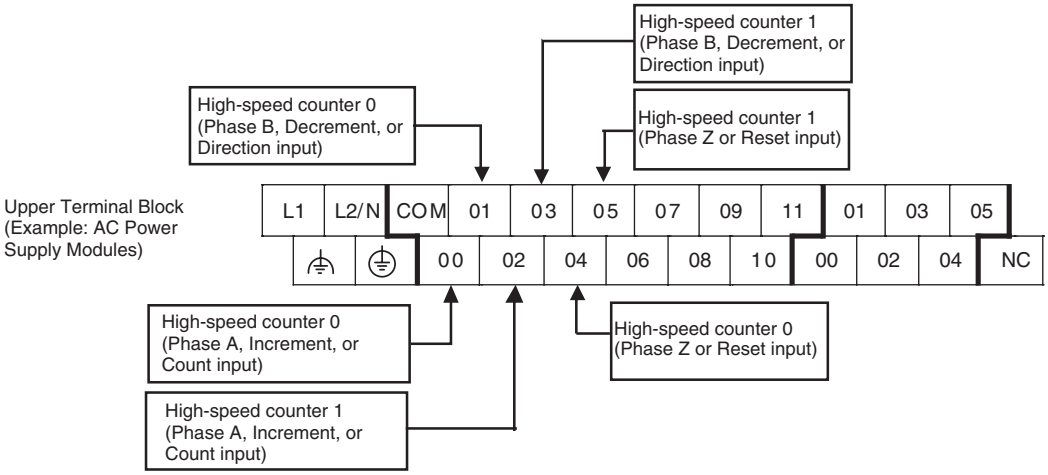

Input Terminal Arrangement for CPU Units with 40 I/O Points

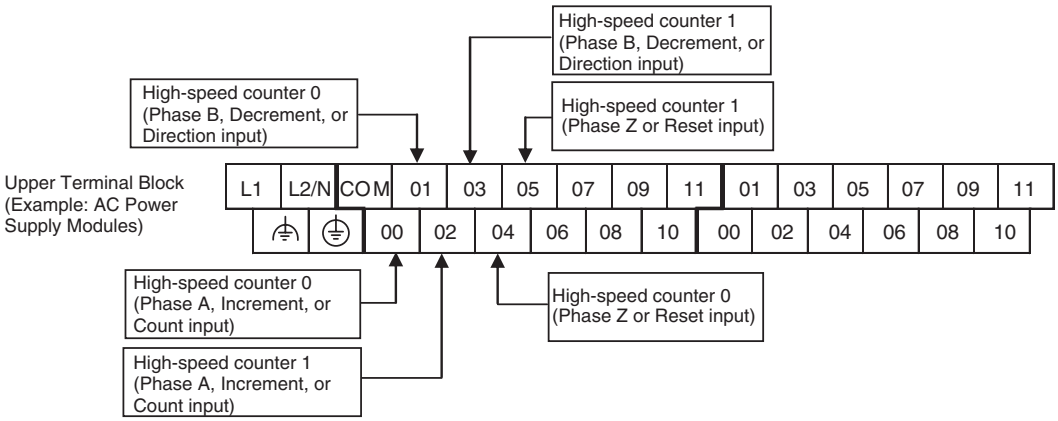

Input Terminal Arrangement for CPU Units with 60 I/O Points

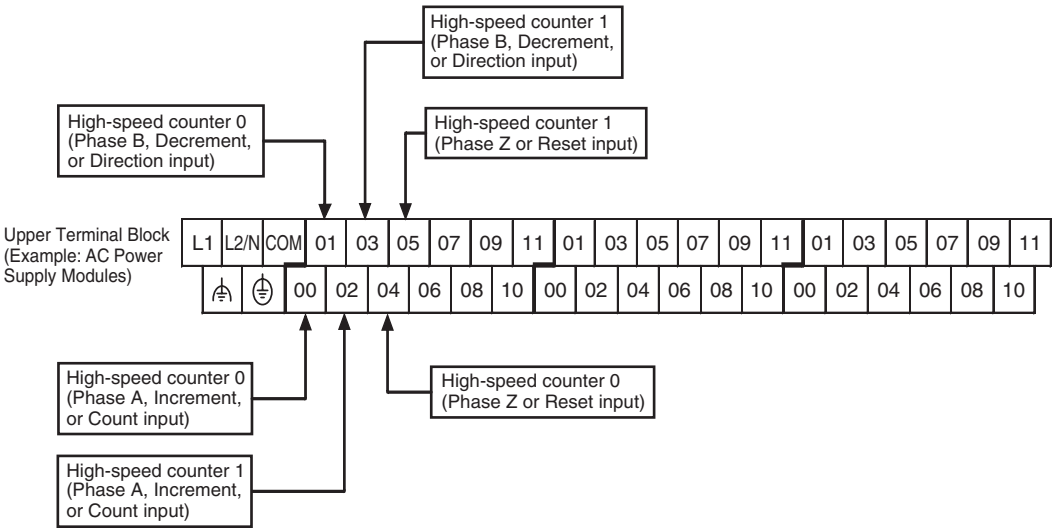

Increment Pulse Inputs

Input Terminal Arrangement for CPU Units with 10 I/O Points

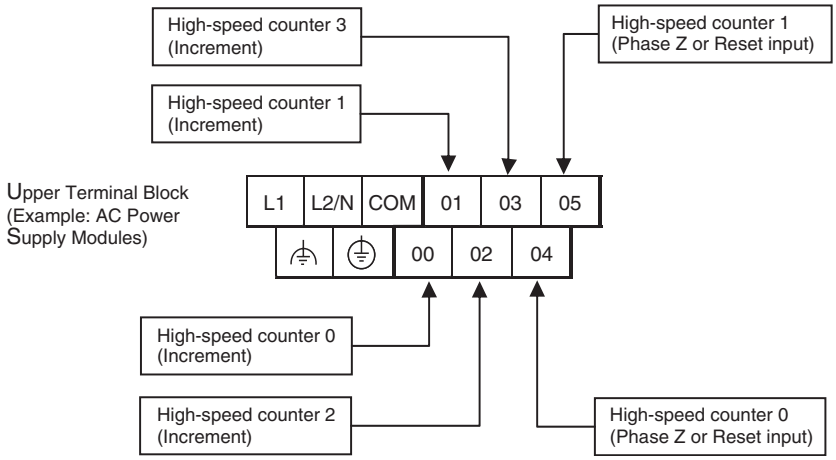

Input Terminal Arrangement for CPU Units with 14 I/O Points

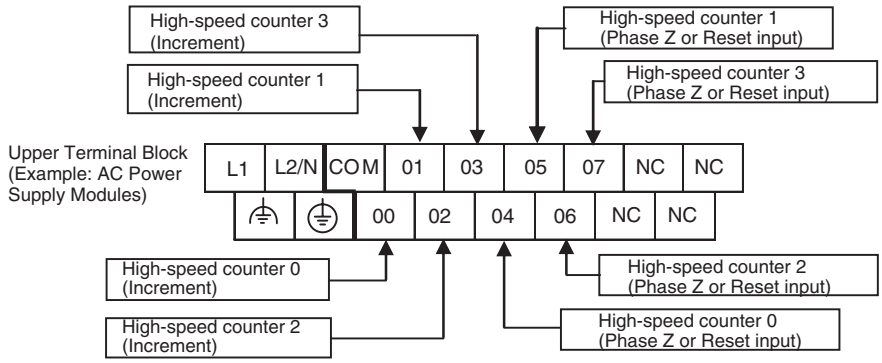

Input Terminal Arrangement for CPU Units with 20 I/O Points

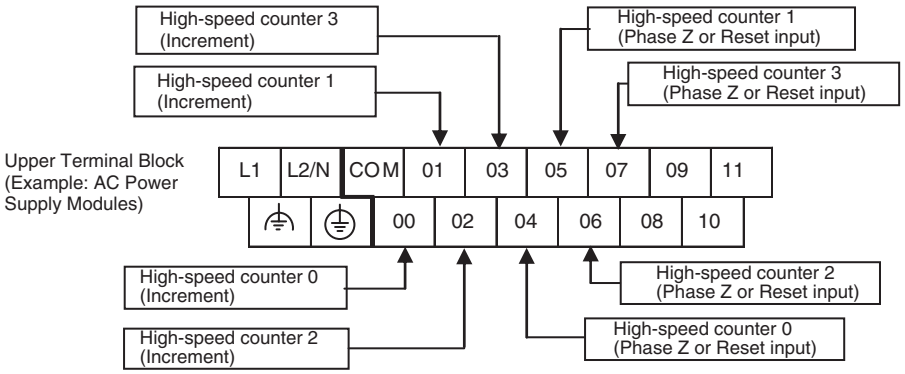

Input Terminal Arrangement for CPU Units with 30 I/O Points

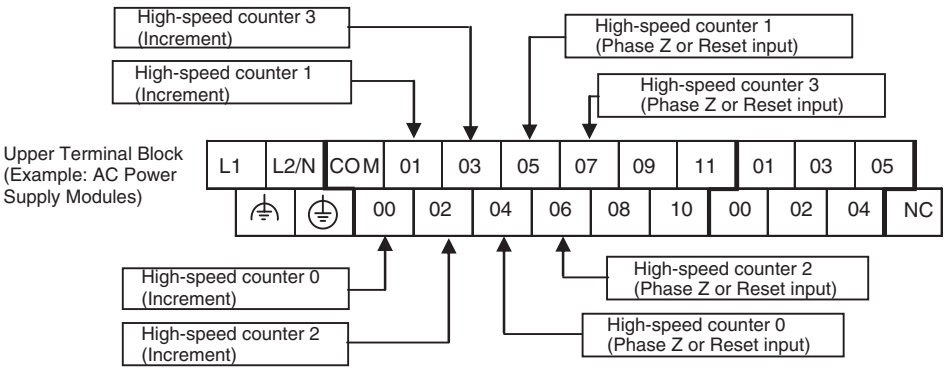

Input Terminal Arrangement for CPU Units with 40 I/O Points

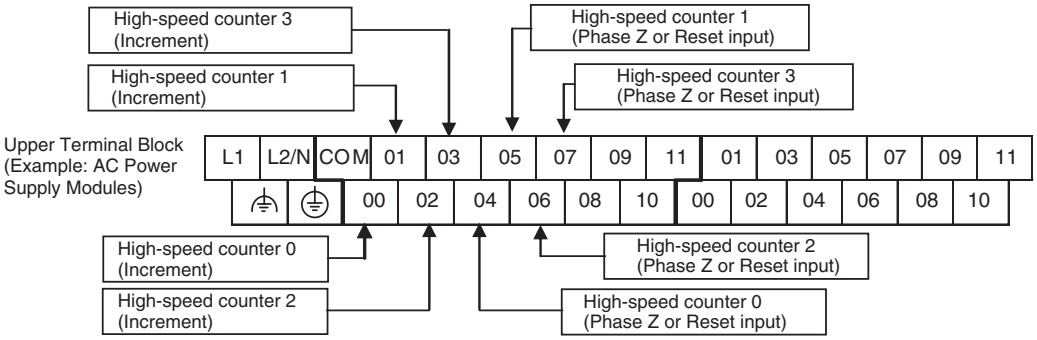

Input Terminal Arrangement for CPU Units with 60 I/O Points

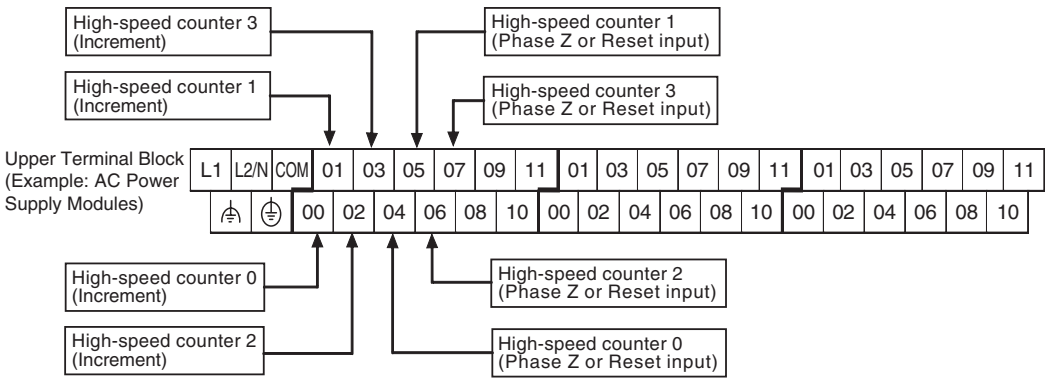

Input Function Settings in the PLC Setup

The CPU Unit's built-in inputs can be set for use as high-speed counter inputs in the PLC Setup's Built-in Input Tab using the CX-Programmer. (When an input is set for use as a high-speed counter input, the corresponding words and bits cannot be used for general-purpose (normal) inputs, input interrupts, or quick-response inputs.)

CPU Units with 10 I/O Points

Address		Default setting	High-speed counter operation settings		Origin searches
Word	Bit		Single-phase (increment pulse input)	Two-phase (differential phases x4, up/down, or pulse/direction)	Origin searches enabled for pulse outputs 0
CIO 0	00	Normal input 0	Counter 0, increment input	Counter 0, A phase, up, or count input	---
	01	Normal input 1	Counter 1, increment input	Counter 0, B phase, down, or direction input	---
	02	Normal input 2	Counter 2, increment input	Counter 1, A phase, up, or count input	---
	03	Normal input 3	Counter 3, increment input	Counter 1, B phase, down, or direction input	Pulse output 0: Origin proximity input signal
	04	Normal input 4	Counter 0, phase-Z/reset input	Counter 0, phase-Z reset input	---
	05	Normal input 5	Counter 1, phase-Z reset input	Counter 1, phase-Z reset input	Pulse output 0: Origin input signal

CPU Units with 14 I/O Points

Input terminal block		Default setting	High-speed counter operation settings		Origin searches
Word	**Bit**		**Single-phase (increment pulse input)**	**Two-phase (differential phases x4, up/down, or pulse/direction)**	**Origin searches enabled for pulse outputs 0 and 1**
CIO 0	00	Normal input 0	High-speed counter 0 (Increment)	High-speed counter 0 (Phase A, Increment, or Count input)	---
	01	Normal input 1	High-speed counter 1 (Increment)	High-speed counter 0 (Phase B, Decrement, or Direction input)	---
	02	Normal input 2	High-speed counter 2 (Increment)	High-speed counter 1 (Phase A, Increment, or Count input)	Pulse output 0: Origin proximity input signal
	03	Normal input 3	High-speed counter 3 (Increment)	High-speed counter 1 (Phase B, Decrement, or Direction input)	Pulse output 1: Origin proximity input signal
	04	Normal input 4	High-speed counter 0 (Phase Z or reset input)	High-speed counter 0 (Phase Z or reset input)	---
	05	Normal input 5	High-speed counter 1 (Phase Z or reset input)	High-speed counter 1 (Phase Z or reset input)	---
	06	Normal input 6	High-speed counter 2 (Phase Z or reset input)	---	Pulse output 0: Origin input signal
	07	Normal input 7	High-speed counter 3 (Phase Z or reset input)	---	Pulse output 1: Origin input signal

CPU Units with 20, 30, 40 or 60 I/O Points

Address		Default setting				High-speed counter operation settings:		Origin searches
Word	**Bit**	**CPU Units with 60 I/O Points**	**CPU Units with 40 I/O Points**	**CPU Units with 30 I/O Points**	**CPU Units with 20 I/O Points**	**Single-phase (increment pulse input)**	**Two-phase (differential phases x4, up/down, or pulse/direction)**	**Origin searches enabled for pulse outputs 0 and 1**
CIO 0	00	Normal input 0	Normal input 0	Normal input 0	Normal input 0	Counter 0, increment input	Counter 0, A phase, up, or count input	---
	01	Normal input 1	Normal input 1	Normal input 1	Normal input 1	Counter 1, increment input	Counter 0, B phase, down, or direction input	---
	02	Normal input 2	Normal input 2	Normal input 2	Normal input 2	Counter 2, increment input	Counter 1, A phase, up, or count input	---
	03	Normal input 3	Normal input 3	Normal input 3	Normal input 3	Counter 3, increment input	Counter 1, B phase, down, or direction input	---
	04	Normal input 4	Normal input 4	Normal input 4	Normal input 4	Counter 0, phase-Z reset input	Counter 0, phase-Z reset input	---
	05	Normal input 5	Normal input 5	Normal input 5	Normal input 5	Counter 1, phase-Z reset input	Counter 1, phase-Z reset input	---
	06	Normal input 6	Normal input 6	Normal input 6	Normal input 6	Counter 2, phase-Z reset input	---	Pulse output 0: Origin input signal
	07	Normal input 7	Normal input 7	Normal input 7	Normal input 7	Counter 3, phase-Z reset input	---	Pulse output 1: Origin input signal
	08	Normal input 8	Normal input 8	Normal input 8	Normal input 8	---	---	---
	09	Normal input 9	Normal input 9	Normal input 9	Normal input 9	---	---	---
	10	Normal input 10	Normal input 10	Normal input 10	Normal input 10	---	---	Pulse output 0: Origin proximity input signal
	11	Normal input 11	Normal input 11	Normal input 11	Normal input 11	---	---	Pulse output 1: Origin proximity input signal
CIO 1	00 to 05	Normal input 12 to 17	Normal input 12 to 17	Normal input 12 to 17	---	---	---	---
	06 to 11	Normal input 18 to 23	Normal input 18 to 23	---	---	---	---	---
CIO 2	00 to 11	Normal input 24 to 35	---	---	---	---	---	---

5-1-6 Pulse Input Connection Examples

Encoders with 24 VDC Open-collector Outputs

This example shows how to connect an encoder that has phase-A, phase-B, and phase-Z outputs.

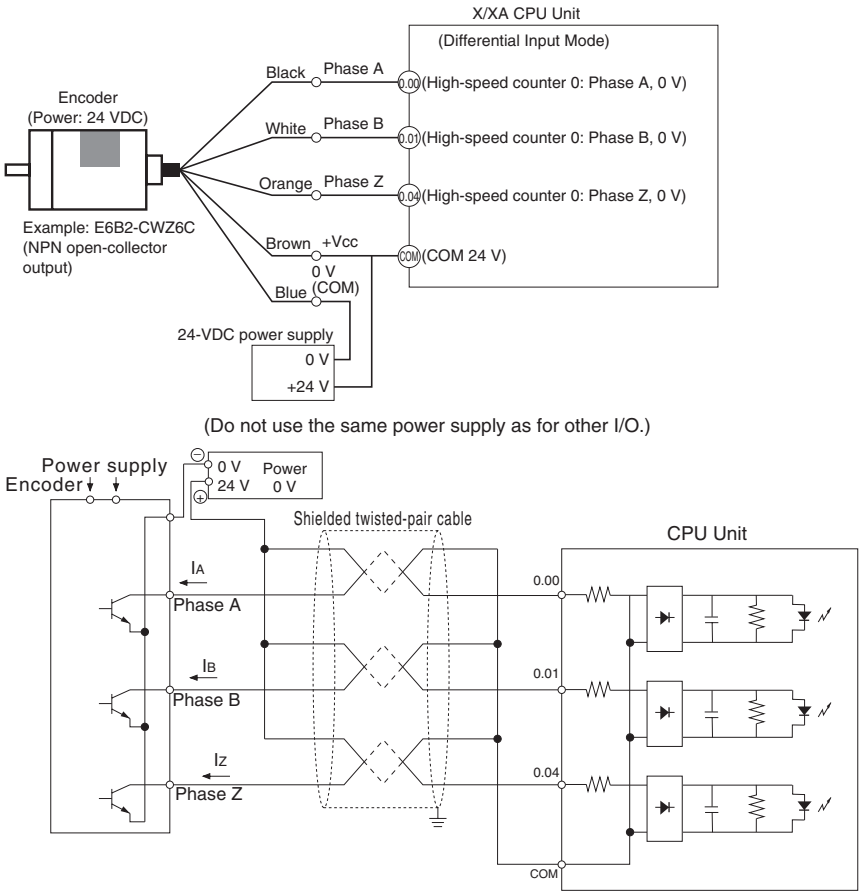

5-1-7 Ladder Program Example

Inspecting a Dimension by Counting Pulse Inputs

- This example is for a CPU Unit with 40 I/O Points.
- High-speed counter 0 is used.
- When the edge of the workpiece is detected, the counter PV is reset by a phase-Z pulse.
- The workpiece is passes inspection if the final count is between 30,000 and 30,300, otherwise the workpiece fails.
- If the workpiece passes, output CIO 100.00 is turned ON by an interrupt and the indicator PL1 is lit. If the workpiece fails, output CIO 100.01 is turned ON by an interrupt and indicator PL2 is lit.
- The interrupt program is interrupt task 10.

■ I/O Allocations

Input Terminals

Input terminal		Usage
Word	Bit	
CIO 0	00	High-speed counter 0 phase-A input (See note.)
	01	High-speed counter 0 phase-B input (See note.)
	02	Start measurement by pushbutton switch (normal input).
	03	Detect trailing edge of measured object (normal input).
	04	Detect leading edge of measured object for high-speed counter 0 phase-Z/reset input (see note). Bit status is reflected in A531.00.
	05 to 11	Not used. (normal input)
CIO 1	00 to 11	Not used. (normal input)

Note The high-speed counter inputs are enabled when the *Use high speed counter 0* Option is selected in the PLC Setup's Built-in Input Tab.

Output Terminals

Output terminal		Usage	
Word	Bit		
CIO 100	00	Normal input	PL1: Dimension pass output
	01	Normal input	PL2: Dimension fail output
	02 to 07	Normal input	Not used.
CIO 101	00 to 07	Normal input	Not used.

Auxiliary Area Addresses for High-speed Counter 0

Function		Address
PV storage words	Leftmost 4 digits	A271
	Rightmost 4 digits	A270
Range Comparison Condition Met Flag	Range 1 Comparison Condition Met Flag	A274.00
Comparison In-progress Flag	ON when a comparison operation is being executed for the high-speed counter.	A274.08
Overflow/Underflow Flag	ON when an overflow or underflow has occurred in the high-speed counter's PV. (Used only when the counting mode is set to Linear Mode.)	A274.09
Count Direction Flag	0: Decrementing 1: Incrementing	A274.10
Reset Bit	Used for the PV software reset.	A531.00
High-speed Counter Gate Bit	When ON, the counter's PV will not be changed even if pulse inputs are received for the counter.	A531.08

Range Comparison Table

The range comparison table is stored in D10000 to D10039.

■ PLC Setup

Select the *Use high speed counter 0* Option in the PLC Setup's Built-in Input Tab.

Item	Setting
High-speed counter 0	Use high speed counter 0
Counting mode	Linear mode
Circular Max. Count	---
Reset method	Software reset
Input Setting	Up/Down inputs

■ I/O Wiring

Input Wiring

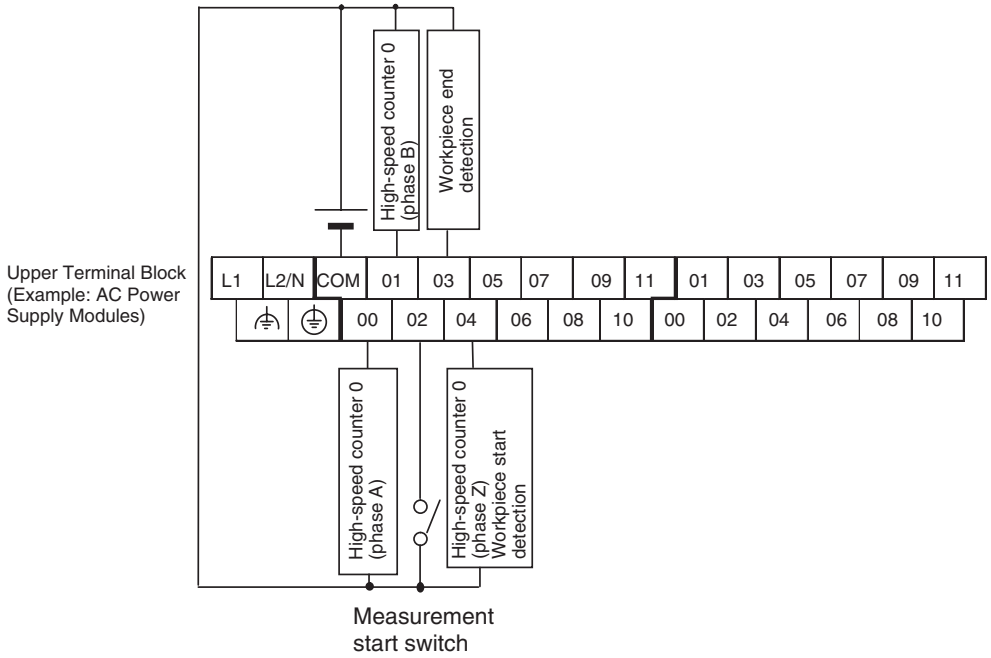

Output Wiring

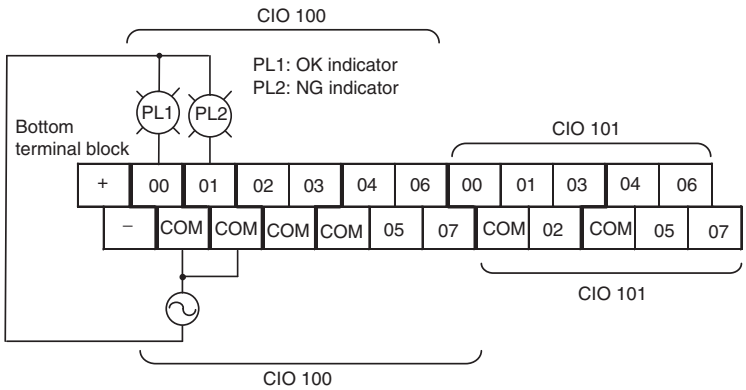

■ Range Comparison Table Settings

The inspection standards data is set in the DM Area with the CX-Programmer. Even though range 1 is the only range being used, all 40 words must still be dedicated to the range comparison table.

Word	Setting	Function	
D10000	7430	Rightmost 4 digits of range 1 lower limit	Lower limit value: 30,000
D10001	0000	Leftmost 4 digits of range 1 lower limit	
D10002	765C	Rightmost 4 digits of range 1 upper limit	Upper limit value: 30,300
D10003	0000	Leftmost 4 digits of range 1 upper limit	
D10004	000A	Range 1 interrupt task number = 10 (A hex)	
D10005 to D10008	All 0000	Range 2 lower and upper limit values (Not used and don't need to be set.)	Range 2 settings
D10009	FFFF	Disables range 2.	
~			

Word	Setting	Function	
D10014 D10019 D10024 D10029 D10034	FFFF	Set the fifth word for ranges 3 to 7 (listed at left) to FFFF to disable those ranges.	
		:	
D10035 to D10038	All 0000	Range 8 lower and upper limit values (Not used and don't need to be set.)	Range 8 settings
D10039	FFFF	Disables range 8.	

■ **Creating the Ladder Program**

Programming in Cyclic Task

Use CTBL(882) to start the comparison operation with high-speed counter 0 and interrupt task 10.

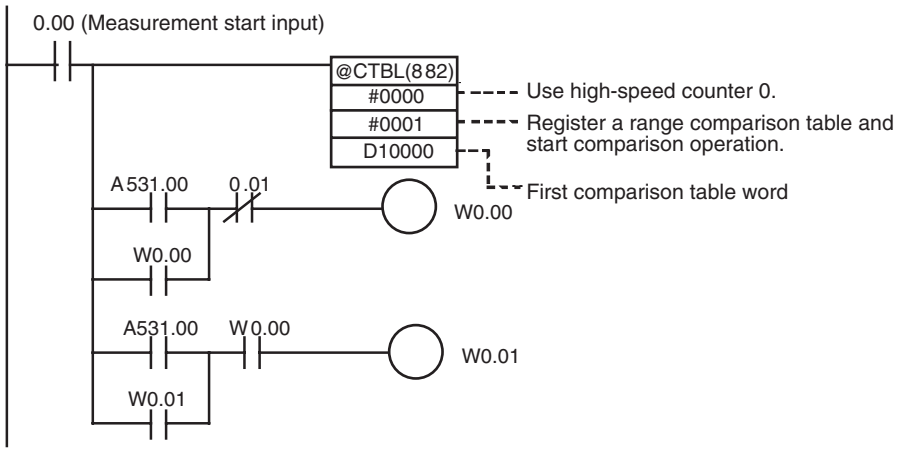

Programming in Interrupt Task 10

Create the processing performed by interrupt task 10.

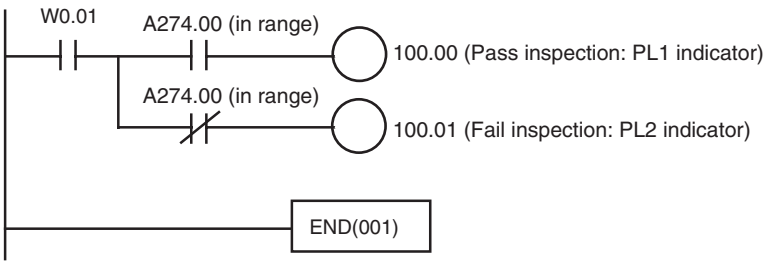

5-1-8 Additional Capabilities and Restrictions

Restrictions on High-speed Counter Inputs

- The Phase-Z signal + Software reset method cannot be used when the high speed counters are operating in Differential Phase or Pulse + Direction Input Modes and the origin search function is enabled for the pulse output (in the PLC Setup). The Phase-Z signal + Software reset method can be used when the high speed counters are operating in Incrementing or Up/Down Input Modes.
- When a high-speed counter is being used (enabled in the PLC Setup), the input cannot be used as a general-purpose (normal) input, interrupt input, or quick-response input.

Starting Interrupt Tasks based on Comparison Conditions

Data registered in advance in a comparison table can be compared with the actual counter PVs during operation. The specified interrupt tasks (registered in the table) will be started when the corresponding comparison condition is met.

There are two comparison methods available: Target value comparison and range comparison.

- Use the CTBL(882) instruction to register the comparison table.
- Use either the CTBL(882) instruction or INI(880) instruction to start the comparison operation.
- Use the INI(880) instruction to stop the comparison operation.

Target Value Comparison

The specified interrupt task is executed when the high-speed counter PV matches a target value registered in the table.

- The comparison conditions (target values and counting directions) are registered in the comparison table along with the corresponding interrupt task number. The specified interrupt task will be executed when the high-speed counter PV matches the registered target value.
- Up to 48 target values (between 1 and 48) can be registered in the comparison table.
- A different interrupt task can be registered for each target value.
- The target value comparison is performed on all of the target values in the table, regardless of the order in which the target values are registered.
- If the PV is changed, the changed PV will be compared with the target values in the table, even if the PV is changed while the target value comparison operation is in progress.

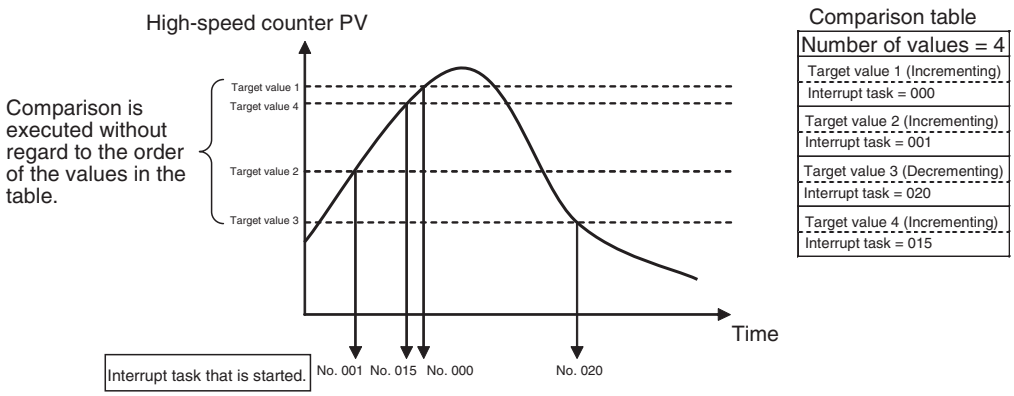

Restrictions

A comparison condition (target value and count direction) cannot appear in the table more than once. An error will occur if a comparison condition is specified two or more times.

Note When the count direction (incrementing/decrementing) changes at a PV that matches a target value, the next target value cannot be matched in that direction.

Set the target values so that they do not occur at the peak or trough of count value changes.

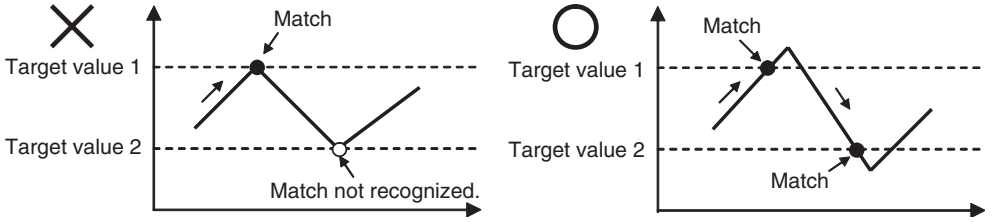

Range Comparison

The specified interrupt task is executed when the high-speed counter PV is within the range defined by the upper and lower limit values.

- The comparison conditions (upper and lower limits of the range) are registered in the comparison table along with the corresponding interrupt task number. The specified interrupt task will be executed once when the high-speed counter PV is in the range (Lower limit ≤ PV ≤ Upper limit).
- A total of 8 ranges (upper and lower limits) are registered in the comparison table.
- The ranges can overlap.
- A different interrupt task can be registered for each range.
- The counter PV is compared with the 8 ranges once each cycle.
- The interrupt task is executed just once when the comparison condition goes from unmet to met.

Restrictions

When more than one comparison condition is met in a cycle, the first interrupt task in the table will be executed in that cycle. The next interrupt task in the table will be executed in the next cycle.

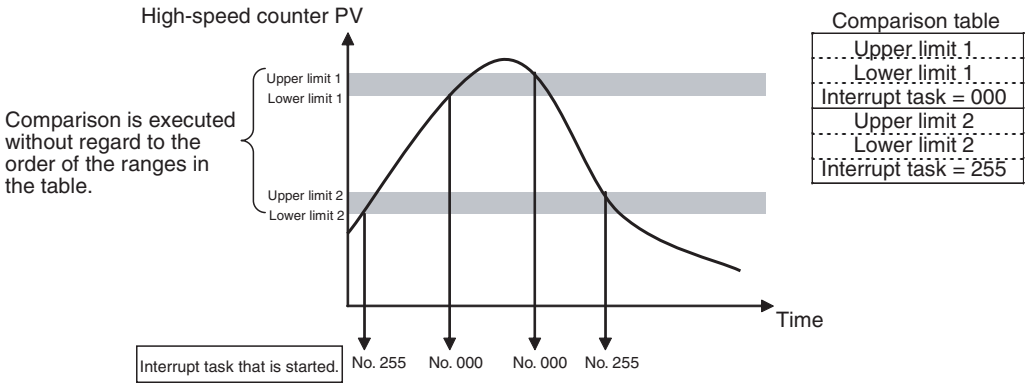

Note The range comparison table can be used without starting an interrupt task when the comparison condition is met. The range comparison function can be useful when you just want to know whether or not the high-speed counter PV is within a particular range.
Use the Range Comparison Condition Met Flags to determine whether the high-speed counter PV is within a registered range.

Pausing Input Signal Counting (Gate Function)

If the High-speed Counter Gate Bit is turned ON, the corresponding high-speed counter will not count even if pulse inputs are received and the counter PV will be maintained at its current value. Bits A53108 to A53111 are the High-speed Counter Gate Bits for high-speed counters 0 to 3.

When the High-speed Counter Gate Bit is turned OFF again, the high-speed counter will resume counting and the counter PV will be refreshed.

Restrictions

- The Gate Bit will be disabled if the high-speed counter's reset method is set to Phase-Z signal + Software reset and the Reset Bit is ON (waiting for the phase-Z input to reset the counter PV.)

High-speed Counter Frequency Measurement

This function measures the frequency of the high-speed counter (input pulses.)

The input pulse frequency can be read by executing the PRV(881) instruction. The measured frequency is output in 8-digit hexadecimal and expressed in Hz. The frequency measurement function can be used with high-speed counter 0 only.

The frequency can be measured while a high-speed counter 0 comparison operation is in progress. Frequency measurement can be performed at the same time as functions such as the high-speed counter and pulse output without affecting the performance of those functions.

Procedure

1,2,3...

1. High-speed Counter Enable/Disable Setting (Required)
   Select the *Use high speed counter 0* Option in the PLC Setup.
2. Pulse Input Mode Setting (Required)
   Set the High-speed Counter 0 Pulse Input Mode (*Input Setting*) in the PLC Setup.
3. Counting Mode Setting (Required)
   Set the High-speed Counter 0 *Counting Mode* in the PLC Setup.
   If ring mode counting is selected, set the High-speed Counter 0 *Circular Max. Count* (max. ring count) in the PLC Setup.
4. Reset Method Setting (Required)
   Set the High-speed Counter 0 Reset Method in the PLC Setup.
5. PRV(881) Instruction Execution (Required)
   N: Specify the high-speed counter number. (High-speed counter 0: 0010)
   C: 0003 (Read frequency)
   D: Destination word for frequency data

Restrictions

- The frequency measurement function can be used with high-speed counter 0 only.

Specifications

Item	Specifications
Number of frequency measurement inputs	1 input (high-speed counter 0 only)
Frequency measurement range	High-speed counter 0: Differential phase inputs: 0 to 50 kHz All other input modes: 0 to 100 kHz **Note:** If the frequency exceeds the maximum value, the maximum value will be stored.
Measurement method	Execution of the PRV(881) instruction
Output data range	Units: Hz Range: Differential phase input: 0000 0000 to 0003 0D40 hex (Y models: 0000 0000 to 0007 A120 hex) All other input modes: 0000 0000 to 0001 86A0 hex (Y models: 0000 0000 to 000F 4240 hex)

Pulse Frequency Conversion

The pulse frequency input to a high-speed counter can be converted to a rotational speed (r/min) or the PV of the counter can be converted to the total number of rotations. The converted value is output as 8-digit hexadecimal. This function is supported only for high-speed counter 0.

Frequency–Rotational Speed Conversion

The rotational speed in r/min is calculated from the pulse frequency input to a high-speed counter and the number of pulses per rotation.

Counter PV–Total Number of Rotations Conversion

The total number of rotations is calculated from the present value of the counter and the number of pulses per rotation.

Procedure

1,2,3...

1. High-speed Counter Enable/Disable Setting (Required)
   Select the *Use high speed counter 0* Option in the PLC Setup.
2. Pulse Input Mode Setting (Required)
   Set the High-speed Counter 0 Pulse Input Mode (*Input Setting*) in the PLC Setup.
3. Counting Mode Setting (Required)
   Set the High-speed Counter 0 *Counting Mode* in the PLC Setup.
   If ring mode counting is selected, set the *Circular Max. Count* (max. ring count) in the PLC Setup.
4. Reset Method Setting (Required)
   Set the High-speed Counter 0 Reset Method in the PLC Setup.
5. Execute PRV2(883) as described below (required).

Converting the Frequency to a Rotational Speed

Execute PRV2(883) with the following operands.

C: Control data (Set to 0000 for frequency-rotational speed conversion.)
P: Coefficient (pulses/rotation (hex))
D: First word for result

Converting the Counter PV to the Total Number of Rotations

Execute PRV2(883) with the following operands.

C: Control data (Set to 0001 for counter PV-total number of rotations conversion.)
P: Coefficient (pulses/rotation (hex))
D: First word for result

Restrictions Pulse frequency conversion is possible only for high-speed counter 0.

5-2 Pulse Outputs

5-2-1 Overview

Fixed duty factor pulses can be output from the CPU Unit's built-in outputs to perform positioning or speed control with a servo driver that accepts pulse inputs.

■ **CW/CCW Pulse Outputs or Pulse + Direction Outputs**

The pulse output mode can be set to match the motor driver's pulse input specifications.

■ **Automatic Direction Selection for Easy Positioning with Absolute Coordinates**

When operating in absolute coordinates (origin defined or PV changed with the INI(880) instruction), the CW/CCW direction will be selected automatically when the pulse output instruction is executed. (The CW/CCW direction is selected by determining whether the number of pulses specified in the instruction is greater than or less than the pulse output PV.)

■ **Triangular Control**

Triangular control (trapezoidal control without a constant-speed plateau) will be performed during positioning executed by an ACC(888) instruction (independent) or PLS2(887) instruction if the number of output pulses required for acceleration/deceleration exceeds the specified target pulse Output Amount.

■ **Change Target Position during Positioning (Multiple Start)**

When positioning was started with a PULSE OUTPUT (PLS2(887)) instruction and the positioning operation is still in progress, another PLS2(887) instruction can be executed to change the target position, target speed, acceleration rate, and deceleration rate.

■ **Switch from Speed Control to Positioning (Fixed Distance Feed Interrupt)**

A PLS2(887) instruction can be executed during a speed control (continuous mode) operation to change to positioning mode (independent mode). This feature allows a fixed distance feed interrupt (moving a specified amount) to be executed when specific conditions occur.

■ **Change Target Speed and Acceleration/Deceleration Rate during Acceleration or Deceleration**

When trapezoidal acceleration/deceleration is being executed according to a pulse output instruction (speed control or positioning), the target speed and acceleration/deceleration rate can be changed during acceleration or deceleration.

■ **Use Variable Duty Factor Pulse Outputs for Lighting, Power Control, Etc.**

The PULSE WITH VARIABLE DUTY FACTOR instruction (PWM(891)) can be used to output variable duty factor pulses from the CPU Unit's built-in outputs for applications such as lighting and power control.

Controlling Pulse Outputs

Purpose	Function	Description
Perform simple positioning by outputting pulses to a motor driver that accepts pulse-train inputs.	Pulse output functions • Single-phase pulse output without acceleration/deceleration Controlled by SPED. • Single-phase pulse output with acceleration/deceleration (equal acceleration and deceleration rates for trapezoidal form) Controlled by ACC. • Single-phase pulse output with trapezoidal acceleration/deceleration (Supports a startup frequency and different acceleration/deceleration rates.) Controlled by PLS2(887).	Built-in outputs can be used as pulse outputs 0 and 1. Target frequency ranges: 1 Hz to 100 kHz Duty factor: 50% The pulse output mode can be set to CW/CCW pulse control or Pulse plus direction control, but the same output mode must be used for pulse outputs 0 and 1. **Note** The pulse output PVs are stored in the Auxiliary Area.

Purpose	Function	Description
Perform origin search and origin return operations.	Origin functions (Origin search and origin return)	Origin search and origin return operations can be executed through pulse outputs. • Origin search: To start the origin search, set the PLC Setup to enable the origin search operation, set the various origin search parameters, and execute the ORIGIN SEARCH instruction (ORG(889)). The Unit will determine the location of the origin based on the Origin Proximity Input Signal and Origin Input Signal. The coordinates of the pulse output's PV will automatically be set as the absolute coordinates. • Origin return: To return to the predetermined origin, set the various origin return parameters and execute the ORIGIN SEARCH instruction (ORG(889)).
Change the target position during positioning. (For example, perform an emergency avoid operation with the Multiple Start feature.)	Positioning with the PLS2(887) instruction	When a positioning operation started with the PULSE OUTPUT (PLS2(887)) instruction is in progress, another PLS2(887) instruction can be executed to change the target position, target speed, acceleration rate, and deceleration rate.
Change speed in steps (polyline approximation) during speed control.	Use the ACC(888) instruction (continuous) to change the acceleration rate or deceleration rate.	When a speed control operation started with the ACC(888) instruction (continuous) is in progress, another ACC(888) instruction (continuous) can be executed to change the acceleration rate or deceleration rate.
Change speed in steps (polyline approximation) during positioning.	Use the ACC(888) instruction (independent) or PLS2(887) to change the acceleration rate or deceleration rate.	When a positioning operation started with the ACC(888) instruction (independent) or PLS2(887) instruction is in progress, another ACC(888) (independent) or PLS2(887) instruction can be executed to change the acceleration rate or deceleration rate.
Perform fixed distance feed interrupt.	Execute positioning with the PLS2(887) instruction during an operation started with SPED(885) (continuous) or ACC(888) (continuous).	When a speed control operation started with the SPED(885) instruction (continuous) or ACC(888) instruction (continuous) is in progress, the PLS2(887) instruction can be executed to switch to positioning, output a fixed number of pulses, and stop.
After determining the origin, perform positioning simply in absolute coordinates without regard to the direction of the current position or target position.	The positioning direction is selected automatically in the absolute coordinate system.	When operating in absolute coordinates (with the origin determined or INI(880) instruction executed to change the PV), the CW or CCW direction is selected automatically based on the relationship between the pulse output PV and the pulse Output Amount specified when the pulse output instruction is executed.
Perform triangular control.	Positioning with the ACC(888) instruction (independent) or PLS2(887) instruction.	When a positioning operation started with the ACC(888) instruction (independent) or PLS2(887) instruction is in progress, triangular control (trapezoidal control without the constant-speed plateau) will be performed if the number of output pulses required for acceleration/deceleration exceeds the specified target pulse Output Amount. (The number of pulses required for acceleration/deceleration equals the time required to reach the target frequency x the target frequency.)
Use variable duty factor outputs for time-proportional temperature control.	Control with analog inputs and the variable duty factor pulse output function (PWM(891)).	Two built-in outputs can be used as PWM(891) outputs 0 and 1 by executing the PWM(891) instruction.

5-2-2 Pulse Output Specifications

Specifications

Item	Specifications
Output mode	Continuous mode (for speed control) or independent mode (for position control)
Positioning (independent mode) instructions	PULS(886) and SPED(885), PULS(886) and ACC(888), or PLS2(887)
Speed control (continuous mode) instructions	SPED(885) or ACC(888)
Origin (origin search and origin return) instructions	ORG(889)
Output frequency	Pulse outputs 0, 1: 1 Hz to 100 kHz (1 Hz units)
Frequency acceleration and deceleration rates	Set in 1 Hz units for acceleration/deceleration rates from 1 Hz to 65,635 Hz (every 4 ms). The acceleration and deceleration rates can be set independently only with PLS2(887).
Changing SVs during instruction execution	The target frequency, acceleration/deceleration rate, and target position can be changed.
Duty factor	Fixed at 50%
Pulse output method	CW/CCW inputs or Pulse + direction inputs The method is selected with an instruction operand. The same method must be used for pulse outputs 0 and 1.
Number of output pulses	Relative coordinates: 0000 0000 to 7FFF FFFF hex (Each direction accelerating or decelerating: 2,147,483,647) Absolute coordinates: 8000 0000 to 7FFF FFFF hex (−2147483648 to 2147483647)
Pulse output PV's relative/absolute coordinate specification	Absolute coordinates are specified automatically when the origin location has been determined by setting the pulse output PV with INI(880) or performing an origin search with ORG(889). Relative coordinates are used when the origin location is undetermined.
Relative pulse specification/ Absolute pulse specification	The pulse type can be specified with an operand in PULS(886) or PLS2(887). **Note** The absolute pulse specification can be used when absolute coordinates are specified for the pulse output PV, i.e. the origin location has been determined. The absolute pulse specification cannot be used when relative coordinates are specified, i.e. the origin location is undetermined. An instruction error will occur.
Pulse output PV's storage location	The following Auxiliary Area words contain the pulse output PVs: Pulse output 0: A277 (leftmost 4 digits) and A276 (rightmost 4 digits) Pulse output 1: A279 (leftmost 4 digits) and A278 (rightmost 4 digits) The PVs are refreshed during regular I/O refreshing.
Acceleration/deceleration curve specification	Trapezoidal or S-curve acceleration/deceleration

Pulse Output Modes

There are two pulse output modes. In independent mode the number of output pulses is specified and in continuous mode the number of output pulses is not specified.

Mode	Description
Independent mode	This mode is used for positioning. Operation stops automatically when the preset number of pulses has been output. It is also possible to stop the pulse output early with INI(880).
Continuous mode	This mode is used for speed control. The pulse output will continue until it is stopped by executing another instruction or switching the PLC to PROGRAM mode.

5-2-3 Pulse Output Terminal Allocations

The following diagrams show the terminals that can be used for pulse outputs in each CPU Unit.

■ **CPU Unit with 10 I/O Points**

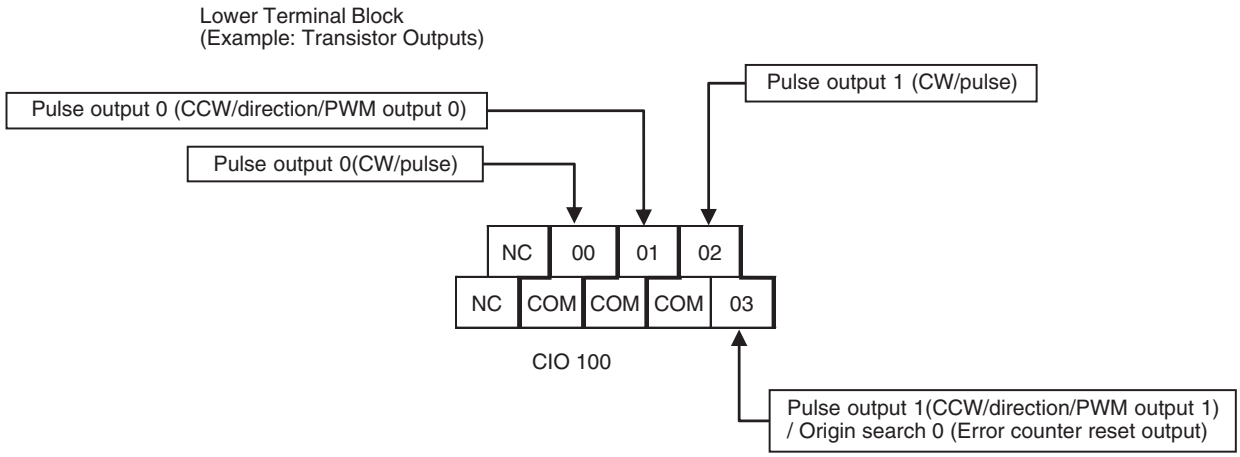

■ **CPU Unit with 14 I/O Points**

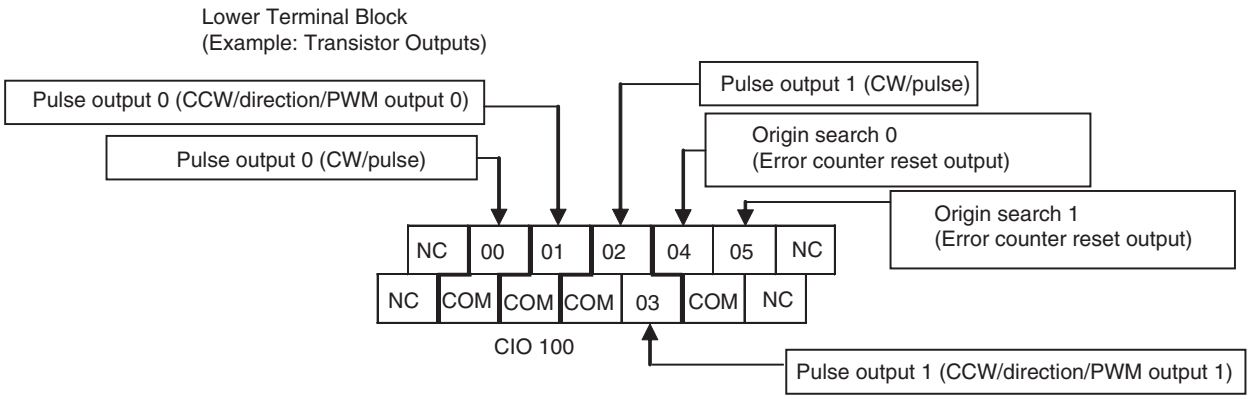

■ **CPU Unit with 20 I/O Points**

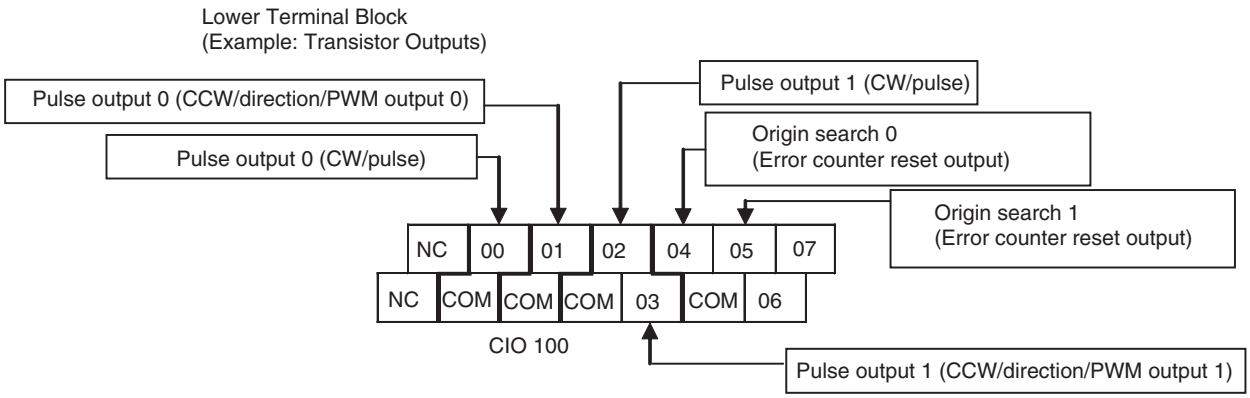

■ CPU Unit with 30 I/O Points

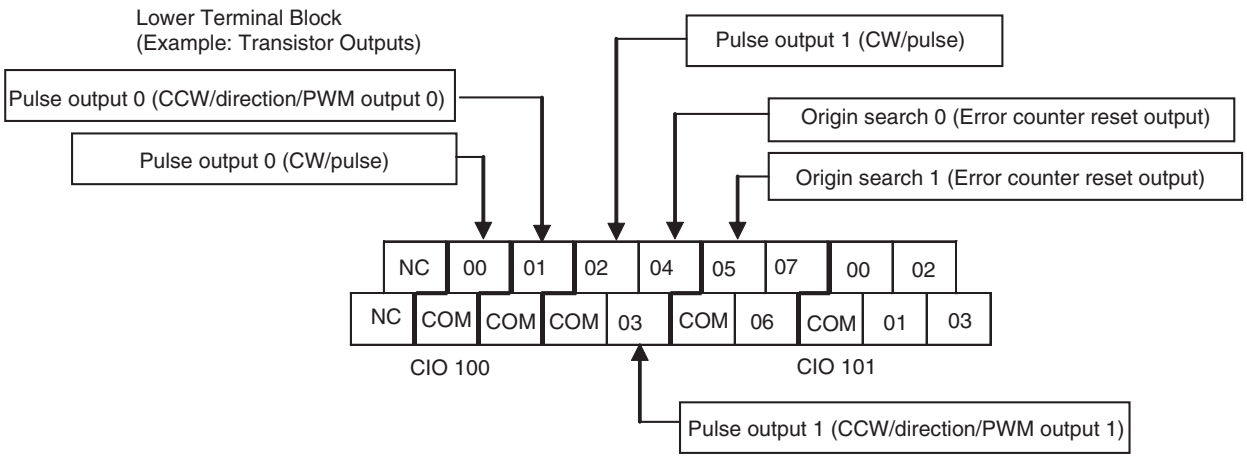

■ CPU Unit with 40 I/O Points

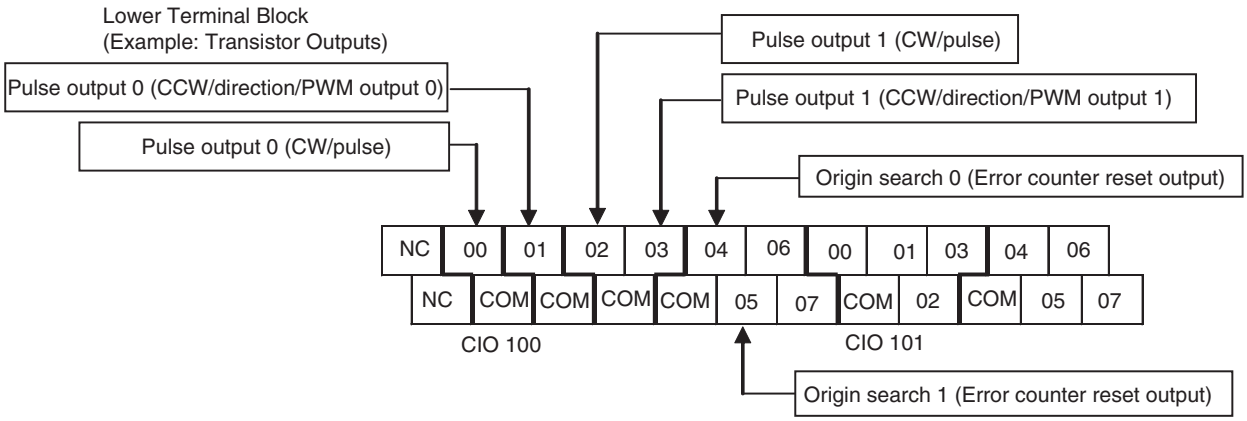

■ CPU Unit with 60 I/O Points

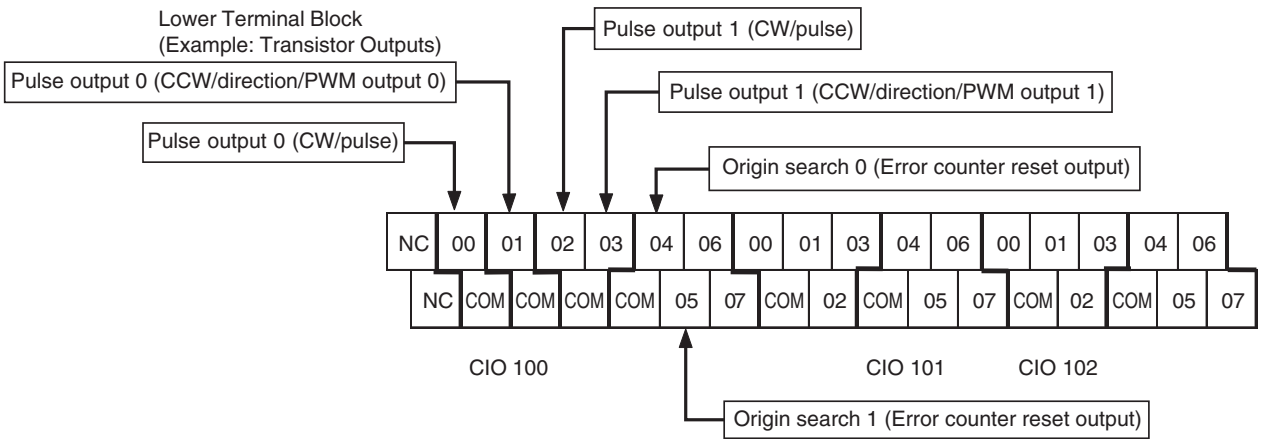

■ Setting Functions Using Instructions and PLC Setup

Output terminal block		When the instructions to the right are not executed	When a pulse output instruction (SPED, ACC, PLS2, or ORG) is executed		When the origin search function is enabled in the PLC Setup, and an origin search is executed by the ORG instruction	When the PWM instruction is executed
Word	Bit	Normal output	Fixed duty factor pulse output			Variable duty factor pulse output
			CW/CCW	Pulse plus direction	When the origin search function is used	PWM output
CIO 100	00	Normal output 0	Pulse output 0 (CW) fixed	Pulse output 0 (pulse) fixed	---	---
	01	Normal output 1	Pulse output 0 (CCW) fixed	Pulse output 0 (direction) fixed	---	PWM output 0
	02	Normal output 2	Pulse output 1 (CW) fixed	Pulse output 1 (pulse) fixed	---	---
	03	Normal output 3	Pulse output 1 (CCW) fixed	Pulse output 1 (direction) fixed	---	PWM output 1
	04	Normal output 4	---	---	Origin search 0 (Error counter reset output)	---
	05	Normal output 5	---	---	Origin search 1 (Error counter reset output)	---
	06	Normal output 6	---	---	---	---
	07	Normal output 7	---	---	---	---
CIO 101	00 to 07	Normal output 8 to 15	---	---	---	

■ Input Terminal Block Arrangements

CPU Unit with 10 I/O Points

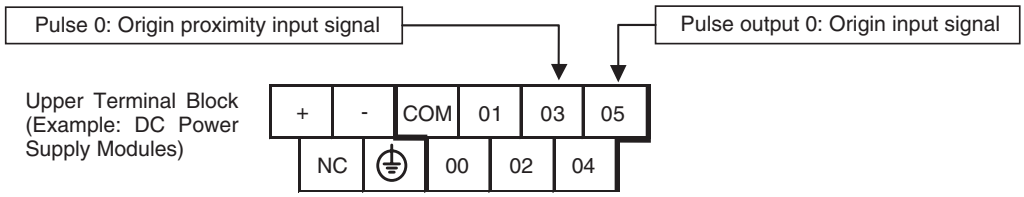

CPU Unit with 14 I/O Points

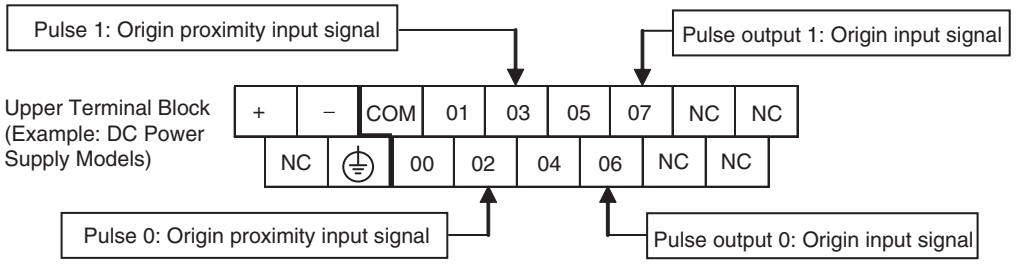

CPU Unit with 20 I/O Points

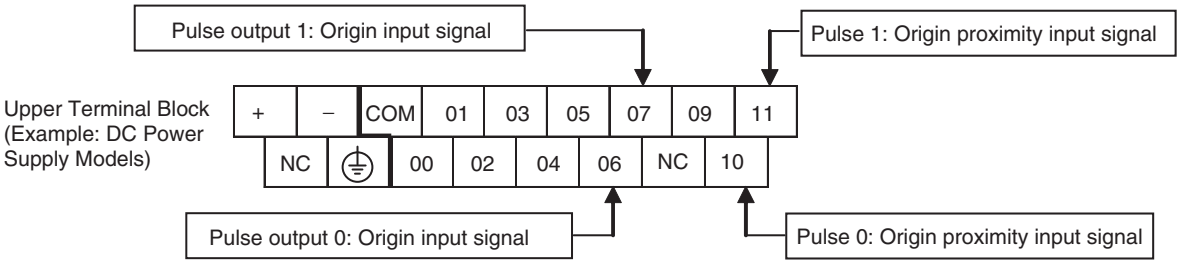

CPU Unit with 30 I/O Points

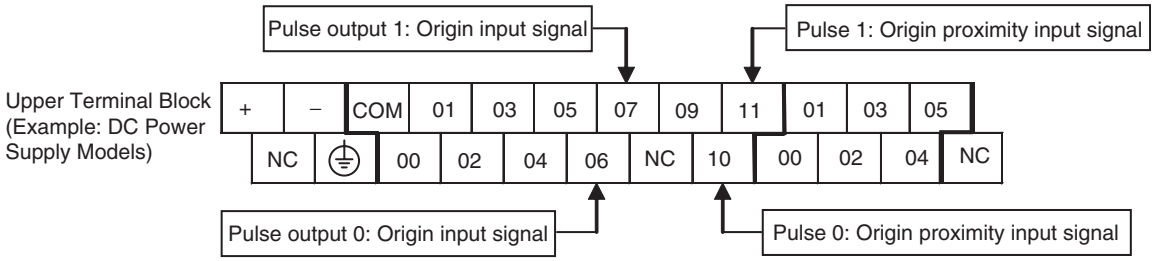

CPU Unit with 40 I/O Points

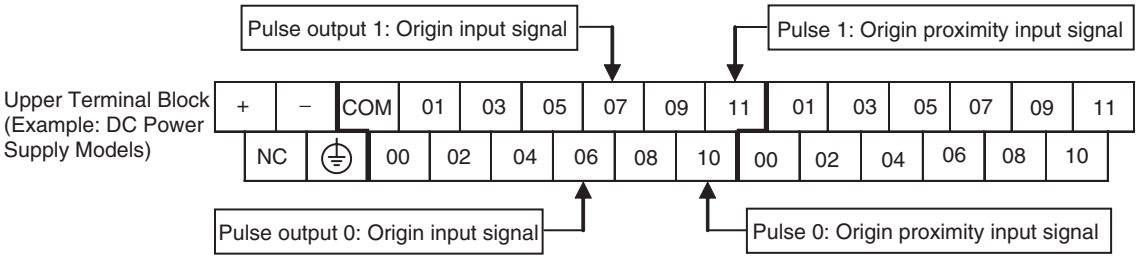

CPU Unit with 60 I/O Points

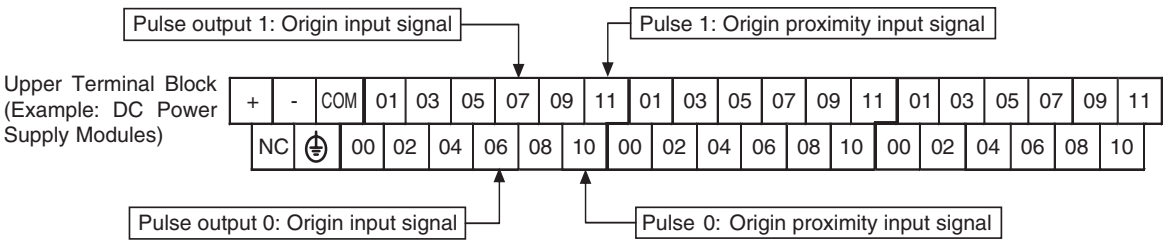

■ Setting Functions Using Instructions and PLC Setup

CPU Units with 10 I/O Points

Address		Default setting	High-speed counter operation settings		Origin searches
Word	Bit		Single-phase (increment pulse input)	Two-phase (differential phases x4, up/down, or pulse/direction)	Origin searches enabled for pulse outputs 0
CIO 0	00	Normal input 0	Counter 0, increment input	Counter 0, A phase, up, or count input	---
	01	Normal input 1	Counter 1, increment input	Counter 0, B phase, down, or direction input	---
	02	Normal input 2	Counter 2, increment input	Counter 1, A phase, up, or count input	---
	03	Normal input 3	Counter 3, increment input	Counter 1, B phase, down, or direction input	Pulse output 0: Origin proximity input signal
	04	Normal input 4	Counter 0, phase-Z/reset input	Counter 0, phase-Z reset input	---
	05	Normal input 5	Counter 1, phase-Z reset input	Counter 1, phase-Z reset input	Pulse output 0: Origin input signal

CPU Units with 14 I/O Points

Input terminal block		Default setting	High-speed counter operation settings		Origin searches
Word	Bit		Single-phase (increment pulse input)	Two-phase (differential phases x4, up/down, or pulse/direction)	Origin searches enabled for pulse outputs 0 and 1
CIO 0	00	Normal input 0	High-speed counter 0 (Increment)	High-speed counter 0 (Phase A, Increment, or Count input)	---
	01	Normal input 1	High-speed counter 1 (Increment)	High-speed counter 0 (Phase B, Decrement, or Direction input)	---
	02	Normal input 2	High-speed counter 2 (Increment)	High-speed counter 1 (Phase A, Increment, or Count input)	Pulse output 0: Origin proximity input signal
	03	Normal input 3	High-speed counter 3 (Increment)	High-speed counter 1 (Phase B, Decrement, or Direction input)	Pulse output 1: Origin proximity input signal
	04	Normal input 4	High-speed counter 0 (Phase Z or reset input)	High-speed counter 0 (Phase Z or reset input)	---
	05	Normal input 5	High-speed counter 1 (Phase Z or reset input)	High-speed counter 1 (Phase Z or reset input)	---
	06	Normal input 6	High-speed counter 2 (Phase Z or reset input)	---	Pulse output 0: Origin input signal
	07	Normal input 7	High-speed counter 3 (Phase Z or reset input)	---	Pulse output 1: Origin input signal

CPU Units with 20, 30, 40 or 60 I/O Points

Address		Default setting				High-speed counter operation settings:		Origin searches
Word	Bit	CPU Units with 60 I/O Points	CPU Units with 40 I/O Points	CPU Units with 30 I/O Points	CPU Units with 20 I/O Points	Single-phase (increment pulse input)	Two-phase (differential phases x4, up/down, or pulse/direction)	Origin searches enabled for pulse outputs 0 and 1
CIO 0	00	Normal input 0	Normal input 0	Normal input 0	Normal input 0	Counter 0, increment input	Counter 0, A phase, up, or count input	---
	01	Normal input 1	Normal input 1	Normal input 1	Normal input 1	Counter 1, increment input	Counter 0, B phase, down, or direction input	---
	02	Normal input 2	Normal input 2	Normal input 2	Normal input 2	Counter 2, increment input	Counter 1, A phase, up, or count input	---
	03	Normal input 3	Normal input 3	Normal input 3	Normal input 3	Counter 3, increment input	Counter 1, B phase, down, or direction input	---
	04	Normal input 4	Normal input 4	Normal input 4	Normal input 4	Counter 0, phase-Z reset input	Counter 0, phase-Z reset input	---
	05	Normal input 5	Normal input 5	Normal input 5	Normal input 5	Counter 1, phase-Z reset input	Counter 1, phase-Z reset input	---
	06	Normal input 6	Normal input 6	Normal input 6	Normal input 6	Counter 2, phase-Z reset input	---	Pulse output 0: Origin input signal
	07	Normal input 7	Normal input 7	Normal input 7	Normal input 7	Counter 3, phase-Z reset input	---	Pulse output 1: Origin input signal
	08	Normal input 8	Normal input 8	Normal input 8	Normal input 8	---	---	---
	09	Normal input 9	Normal input 9	Normal input 9	Normal input 9	---	---	---
	10	Normal input 10	Normal input 10	Normal input 10	Normal input 10	---	---	Pulse output 0: Origin proximity input signal
	11	Normal input 11	Normal input 11	Normal input 11	Normal input 11	---	---	Pulse output 1: Origin proximity input signal
CIO 1	00 to 05	Normal input 12 to 17	Normal input 12 to 17	Normal input 12 to 17	---	---	---	---
	06 to 11	Normal input 18 to 23	Normal input 18 to 23	---	---	---	---	---
CIO 2	00 to 11	Normal input 24 to 35	---	---	---	---	---	---

Auxiliary Area Data Allocation

Function		Pulse output number	
		0	1
Pulse output PV storage words	Leftmost 4 digits	A277	A279
PV range: 8000 0000 to 7FFF FFFF hex (–2,147,483,648 to 2,147,483,647)	Rightmost 4 digits	A276	A278
Reset Bits The pulse output PV will be cleared when this bit is turned from OFF to ON.	0: Not cleared. 1: Clear PV.	A540.00	A541.00

Function		Pulse output number	
		0	1
CW Limit Input Signal Flags This is the CW limit input signal, which is used in the origin search.	ON when turned ON from an external input.	A540.08	A541.08
CCW Limit Input Signal Flags This is the CCW limit input signal, which is used in the origin search.	ON when turned ON from an external input.	A540.09	A541.09
Positioning completed input signals This is the positioning completed input signal, which is used in the origin search.	ON when turned ON from an external input.	A540.10	A541.10
Accel/Decel Flags ON when pulses are being output according to an ACC(888) or PLS2(887) instruction and the output frequency is being changed in steps (accelerating or decelerating).	0: Constant speed 1: Accelerating or decelerating	A280.00	A281.00
Overflow/Underflow Flags ON when an overflow or underflow has occurred in the pulse output PV.	0: Normal 1: Overflow or underflow	A280.01	A281.01
Output Amount Set Flags ON when the number of output pulses has been set with the PULS instruction.	0: No setting 1: Setting made	A280.02	A281.02
Output Completed Flags ON when the number of output pulses set with the PULS(886)/PLS2(887) instruction has been output.	0: Output not completed. 1: Output completed.	A280.03	A281.03
Output In-progress Flags ON when pulses are being output from the pulse output.	0: Stopped 1: Outputting pulses.	A280.04	A281.04
No-origin Flags ON when the origin has not been determined for the pulse output.	0: Origin established. 1: Origin not established.	A280.05	A281.05
At-origin Flags ON when the pulse output PV matches the origin (0).	0: Not stopped at origin. 1: Stopped at origin.	A280.06	A281.06
Output Stopped Error Flags ON when an error occurred while outputting pulses in the origin search function.	0: No error 1: Stop error occurred.	A280.07	A281.07
Stop Error Codes When a Pulse Output Stop Error occurs, the error code is stored in that pulse outputs corresponding Stop Error Code word.	---	A444	A445

5-2-4 Pulse Output Patterns

The following tables show the kinds of pulse output operations that can be performed by combining various pulse output instructions.

Continuous Mode (Speed Control)

Starting a Pulse Output

Operation	Example application	Frequency changes	Description	Procedure	
				Instruction	Settings
Output with specified speed	Changing the speed (frequency) in one step	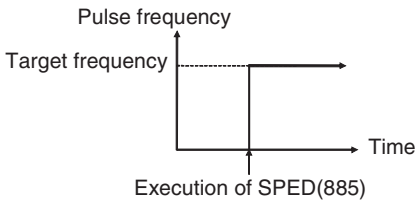	Outputs pulses at a specified frequency.	SPED(885) (Continuous)	•Port "CW/CCW" or "Pulse + direction" •Continuous •Target frequency
Output with specified acceleration and speed	Accelerating the speed (frequency) at a fixed rate	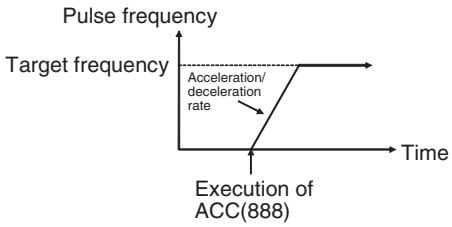	Outputs pulses and changes the frequency at a fixed rate.	ACC(888) (Continuous)	•Port •"CW/CCW" or "Pulse + direction" •Continuous •Acceleration/deceleration rate •Target frequency

Changing Settings

Operation	Example application	Frequency changes	Description	Procedure	
				Instruction	Settings
Change speed in one step	Changing the speed during operation	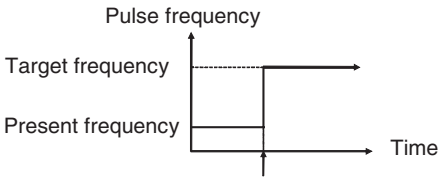	Changes the frequency (higher or lower) of the pulse output in one step.	SPED(885) (Continuous) ↓ SPED(885) (Continuous)	•Port •Continuous •Target frequency
Change speed smoothly	Changing the speed smoothly during operation	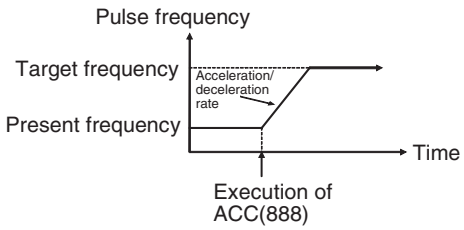	Changes the frequency from the present frequency at a fixed rate. The frequency can be accelerated or decelerated.	ACC(888) or SPED(885) (Continuous) ↓ ACC(888) (Continuous)	•Port •Continuous •Target frequency •Acceleration/deceleration rate
	Changing the speed in a polyline curve during operation	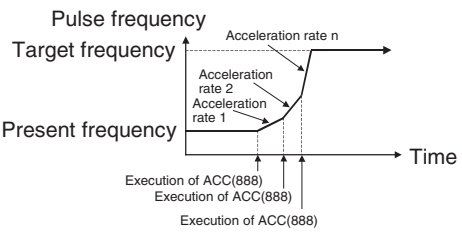	Changes the acceleration or deceleration rate during acceleration or deceleration.	ACC(888) (Continuous) ↓ ACC(888) (Continuous)	•Port •Continuous •Target frequency •Acceleration/deceleration rate
Change direction	Not supported.				
Change pulse output method	Not supported.				

Stopping a Pulse Output

Operation	Example application	Frequency changes	Description	Procedure	
				Instruction	Settings
Stop pulse output	Immediate stop	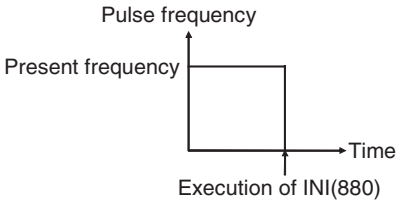	Stops the pulse output immediately.	SPED(885) or ACC(888) (Continuous) ↓ INI(880)	•Port •Stop pulse output
Stop pulse output	Immediate stop	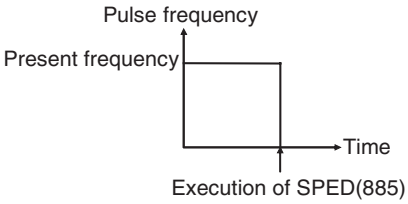	Stops the pulse output immediately.	SPED(885) ↓ SPED(885) (Continuous)	•Port •Continuous •Target frequency=0
Stop pulse output smoothly	Decelerate to a stop	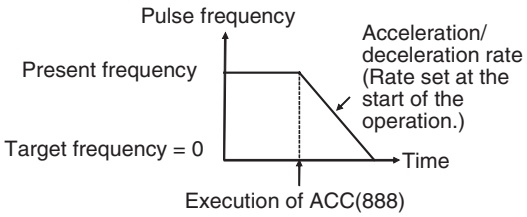	Decelerates the pulse output to a stop. **Note** If ACC(888) started the operation, the original acceleration/ deceleration rate will remain in effect. If SPED(885) started the operation, the acceleration/ deceleration rate will be invalid and the pulse output will stop immediately.	SPED(885) or ACC(888) (Continuous) ↓ ACC(888) (Continuous)	•Port •Continuous •Target frequency=0

Independent Mode (Positioning)

Starting a Pulse Output

Operation	Example application	Frequency changes	Description	Procedure	
				Instruction	Settings
Output with specified speed	Positioning without acceleration or deceleration	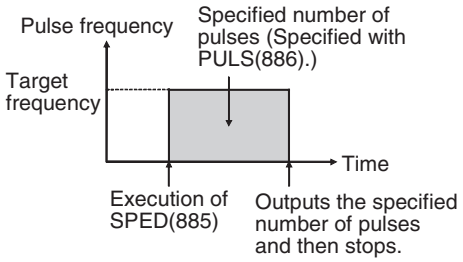	Starts outputting pulses at the specified frequency and stops immediately when the specified number of pulses has been output. **Note** The target position (specified number of pulses) cannot be changed during positioning.	PULS(886) ↓ SPED(885)	•Number of pulses •Relative or absolute pulse specification •Port •"CW/CCW" or "Pulse + direction" •Independent •Target frequency
Simple trapezoidal control	Positioning with trapezoidal acceleration and deceleration (Same rate used for acceleration and deceleration; no starting speed) The number of pulses cannot be changed during positioning.	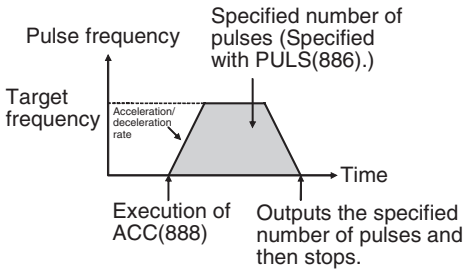	Accelerates and decelerates at the same fixed rate and stops immediately when the specified number of pulses has been output. (See note.) **Note** The target position (specified number of pulses) cannot be changed during positioning.	PULS(886) ↓ ACC(888) (Independent)	•Number of pulses •Relative or absolute pulse specification •Port •"CW/CCW" or "Pulse + direction" •Independent •Acceleration and deceleration rate •Target frequency
Complex trapezoidal control	Positioning with trapezoidal acceleration and deceleration (Separate rates used for acceleration and deceleration; starting speed) The number of pulses can be changed during positioning.	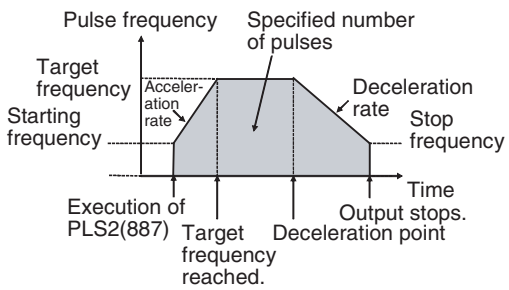	Accelerates and decelerates at a fixed rates. The pulse output is stopped when the specified number of pulses has been output. (See note.) **Note** The target position (specified number of pulses) can be changed during positioning.	PLS2(887)	•Number of pulses •Relative or absolute pulse specification •Port •"CW/CCW" or "Pulse + direction" •Acceleration rate •Deceleration rate •Target frequency •Starting frequency

Note Triangular Control

If the specified number of pulses is less than the number required just to reach the target frequency and return to zero, the function will automatically reduce the acceleration/deceleration time and perform triangular control (acceleration and deceleration only.) An error will not occur.

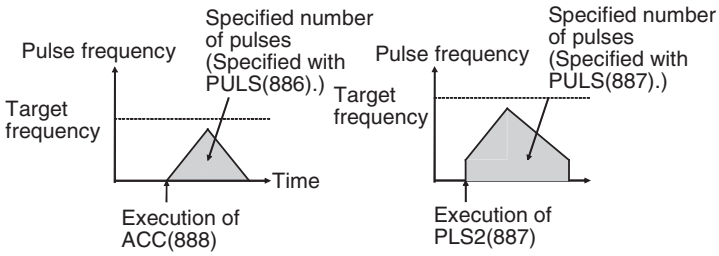

Changing Settings

Operation	Example application	Frequency changes	Description	Procedure	
				Instruction	Settings
Change speed in one step	Changing the speed in one step during operation	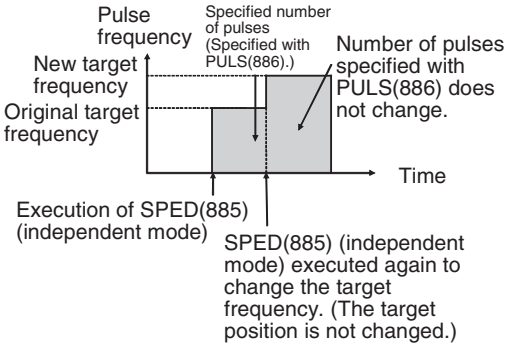	SPED(885) can be executed during positioning to change (raise or lower) the pulse output frequency in one step. The target position (specified number of pulses) is not changed.	PULS(886) ↓ SPED(885) (Independent) ↓ SPED(885) (Independent)	•Number of pulses •Relative or absolute pulse specification •Port •"CW/CCW" or "Pulse + direction" •Independent •Target frequency
Change speed smoothly (with acceleration rate = deceleration rate)	Changing the target speed (frequency) during positioning (acceleration rate = deceleration rate)	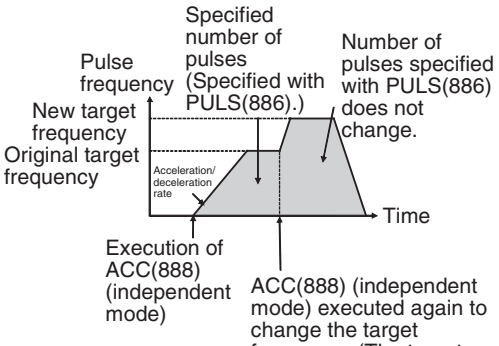	ACC(888) can be executed during positioning to change the acceleration/deceleration rate and target frequency. The target position (specified number of pulses) is not changed.	PULS(886) ↓ ACC(888) or SPED(885) (Independent) ↓ ACC(888) (Independent) PLS2(887) ↓ ACC(888) (Independent)	•Number of pulses •Relative or absolute pulse specification •Port •"CW/CCW" or "Pulse + direction" •Independent •Acceleration and deceleration rate •Target frequency
Change speed smoothly (with unequal acceleration and deceleration rates)	Changing the target speed (frequency) during positioning (different acceleration and deceleration rates)	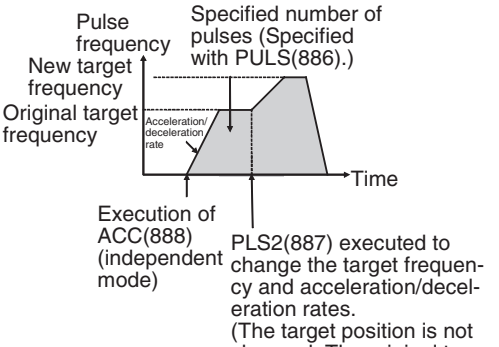	PLS2(887) can be executed during positioning to change the acceleration rate, deceleration rate, and target frequency. **Note** To prevent the target position from being changed intentionally, the original target position must be specified in absolute coordinates.	PULS(886) ↓ ACC(888) (Independent) ↓ PLS2(887) PLS2(887) ↓ PLS2(887)	•Number of pulses •Relative or absolute pulse specification •Port •"CW/CCW" or "Pulse + direction" •Acceleration rate •Deceleration rate •Target frequency •Starting frequency

Operation	Example application	Frequency changes	Description	Procedure	
				Instruction	Settings
Change target position	Change the target position during positioning (multiple start function)	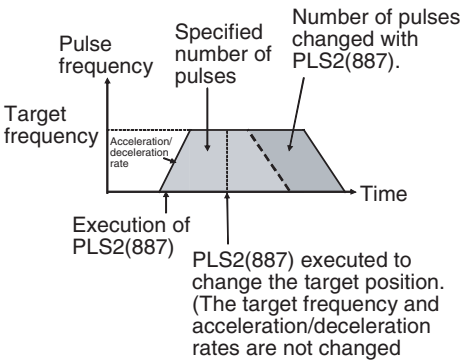	PLS2(887) can be executed during positioning to change the target position (number of pulses). **Note** When the target position cannot be changed without maintaining the same speed range, an error will occur and the original operation will continue to the original target position.	PULS(886) ↓ ACC(888) (Independent) ↓ PLS2(887) PLS2(887) ↓ PLS2(887) PLS2(887) ↓ PLS2(887)	•Number of pulses •Relative or absolute pulse specification •Port •"CW/CCW" or "Pulse + direction" •Acceleration rate •Deceleration rate •Target frequency •Starting frequency
Change target position and speed smoothly	Change the target position and target speed (frequency) during positioning (multiple start function)	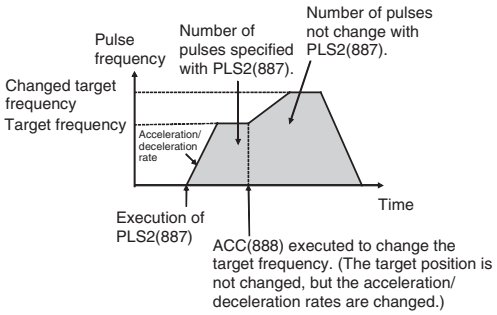	PLS2(887) can be executed during positioning to change the target position (number of pulses), acceleration rate, deceleration rate, and target frequency. **Note** When the settings cannot be changed without maintaining the same speed range, an error will occur and the original operation will continue to the original target position.	PULS(886) ↓ ACC(888) (Independent) ↓ PLS2(887)	•Number of pulses •Relative or absolute pulse specification •Port •"CW/CCW" or "Pulse + direction" •Acceleration rate •Deceleration rate •Target frequency •Starting frequency
	Change the acceleration and deceleration rates during positioning (multiple start function)	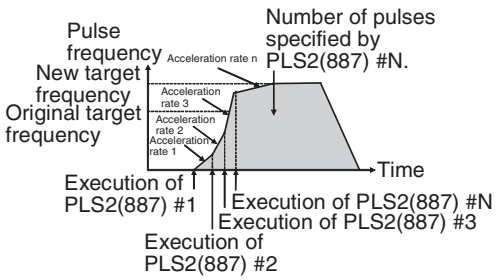	PLS2(887) can be executed during positioning (acceleration or deceleration) to change the acceleration rate or deceleration rate.	PULS(886) ↓ ACC(888) (Independent) ↓ PLS2(887) PLS2(887) ↓ PLS2(887)	•Number of pulses •Acceleration rate •Deceleration rate

Operation	Example application	Frequency changes	Description	Procedure	
				Instruction	Settings
Change direction	Change the direction during positioning	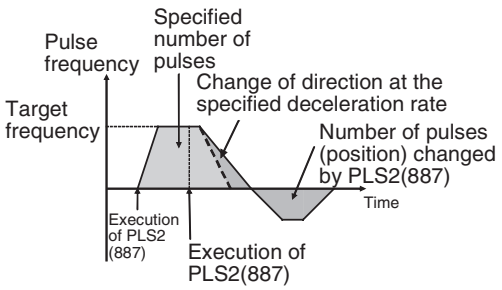	PLS2(887) can be executed during positioning with relative pulse specification to change to absolute pulses and reverse direction.	PULS(886) ↓ ACC(888) (Independent) ↓ PLS2(887) PLS2(887) ↓ PLS2(887)	•Number of pulses •Absolute pulse specification •Port •"CW/CCW" or "Pulse + direction" •Acceleration rate •Deceleration rate •Target frequency •Starting frequency
Change pulse output method	Not supported.				

Stopping a Pulse Output

Operation	Example application	Frequency changes	Description	Procedure	
				Instruction	Settings
Stop pulse output (Number of pulses setting is not preserved.)	Immediate stop	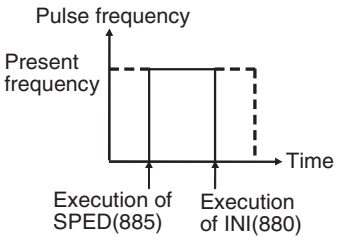	Stops the pulse output immediately and clears the number of output pulses setting.	PULS(886) ↓ ACC(888) or SPED(885) (Independent) ↓ INI(880) PLS2(887) ↓ INI(880)	•Stop pulse output
Stop pulse output (Number of pulses setting is not preserved.)	Immediate stop	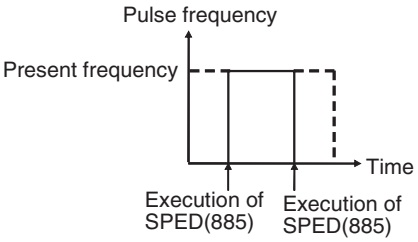	Stops the pulse output immediately and clears the number of output pulses setting.	PULS(886) ↓ SPED(885) (Independent) ↓ SPED(885)	•Port •Independent •Target frequency = 0
Stop sloped pulse output smoothly. (Number of pulses setting is not preserved.)	Decelerate to a stop	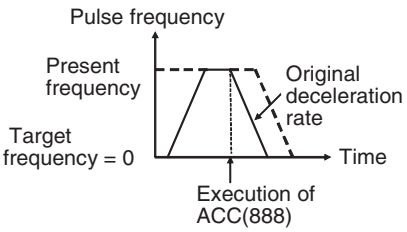	Decelerates the pulse output to a stop. **Note** If ACC(888) started the operation, the original acceleration/deceleration rate will remain in effect. If SPED(885) started the operation, the acceleration/deceleration rate will be invalid and the pulse output will stop immediately.	PULS(886) ↓ ACC(888) or SPED(885) (Independent) ↓ ACC(888) (Independent) PLS2(887) ↓ ACC(888) (Independent)	•Port •Independent •Target frequency = 0

Switching from Continuous Mode (Speed Control) to Independent Mode (Positioning)

Example application	Frequency changes	Description	Procedure	
			Instruction	Settings
Change from speed control to fixed distance positioning during operation	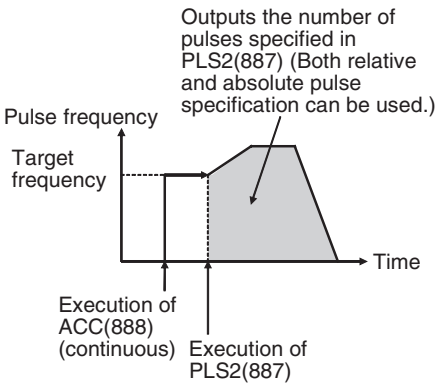	PLS2(887) can be executed during a speed control operation started with ACC(888) to change to positioning operation. **Note** An error will occur if a constant speed cannot be achieved after switching the mode. If this happens, the instruction execution will be ignored and the previous operation will be continued.	ACC(888) (Continuous) ↓ PLS2(887)	•Port •Acceleration rate •Deceleration rate •Target frequency •Number of pulses **Note** The starting frequency is ignored.
Fixed distance feed interrupt	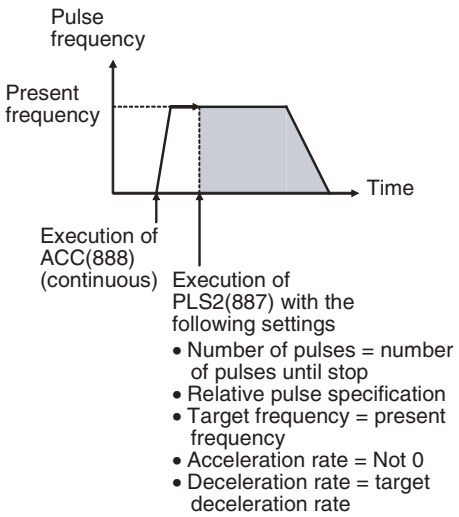			

Relative Pulse Outputs and Absolute Pulse Outputs

Selecting Relative or Absolute Coordinates

The pulse output PV's coordinate system (absolute or relative) is selected automatically, as follows:

- When the origin is undetermined, the system operates in relative coordinates.
- When the origin has been determined, the system operates in absolute coordinates.

Conditions	Origin has been determined by an origin search	Origin has been determined by executing INI(880) to change the PV	Origin not established (Origin search has not been performed and PV has not been changed with INI(880).)
Pulse output PV's coordinate system	Absolute coordinates		Relative coordinates

Relationship between the Coordinate System and Pulse Specification

The following table shows the pulse output operation for the four possible combinations of the coordinate systems (absolute or relative) and the pulse output (absolute or relative) specified when PULS(886) or PLS2(887) is executed.

<table>
<tr><th rowspan="3">Pulse output specified in PULS(886) or PLS2(887)</th><th colspan="2">Coordinate system</th></tr>
<tr><th>Relative coordinate system</th><th>Absolute coordinate system</th></tr>
<tr><th>Origin not established:
The No-origin Flag will be ON in this case.</th><th>Origin established:
The No-origin Flag will be OFF in this case.</th></tr>
<tr><td>Relative pulse specification</td><td colspan="2">Positions the system to another position relative to the current position.
Number of movement pulses = number of pulses setting</td></tr>
<tr><td>The pulse output PV after instruction execution = Number of movement pulses = Number of pulses setting
Note The pulse output PV is reset to 0 just before pulses are output. After that, the specified number of pulses is output.
The following example shows the number of pulses setting = 100 counterclockwise.
 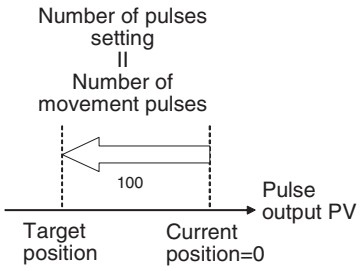

Pulse output PV range:
8000 0000 to 7FFF FFFF hex
Number of pulses setting range:
0000 0000 to 7FFF FFFF hex</td><td>The pulse output PV after instruction execution = PV + Number of movement pulses.
The following example shows the number of pulses setting = 100 counterclockwise.
 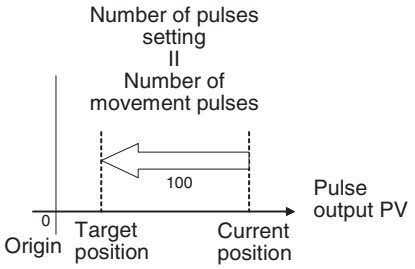

Pulse output PV range:
8000 0000 to 7FFF FFFF hex
Number of pulses setting range:
0000 0000 to 7FFF FFFF hex</td></tr>
</table>

Pulse output specified in PULS(886) or PLS2(887)	Coordinate system	
	Relative coordinate system	**Absolute coordinate system**
	Origin not established: **The No-origin Flag will be ON in this case.**	**Origin established:** **The No-origin Flag will be OFF in this case.**
Absolute pulse specification	The absolute pulse specification cannot be used when the origin location is undetermined, i.e., when the system is operating in the relative coordinate system. An instruction execution error will occur.	Positions the system to an absolute position relative to the origin. The number of movement pulses and movement direction are calculated automatically from the current position (pulse output PV) and target position. The following example shows the number of pulses setting = +100. 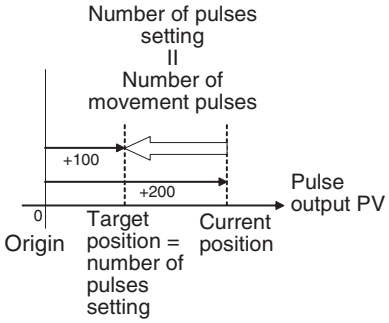 Number of movement pulses = Number of pulses setting - Pulse output PV when instruction is executed The movement direction is determined automatically. Pulse output PV when instruction is executed = Number of pulses setting Pulse output PV range: 8000 0000 to 7FFF FFFF hex Number of pulses setting range: 8000 0000 to 7FFF FFFF hex

Operations Affecting the Origin Status (Established/Not Established Status)

The following table shows the operations that can affect the origin status (origin established or no-origin), such as changing the operating mode and executing certain instructions.

The No-origin Flag will be ON when the corresponding pulse output's origin is not established and OFF when the origin is established.

Current status / Operation		PROGRAM mode		RUN mode or MONITOR mode	
		Origin established	**Origin not established**	**Origin established**	**Origin not established**
Operating mode change	Switch to RUN or MONITOR	Status changes to “Origin not established.”	“Origin not established” status continues.	---	---
	Switch to PROGRAM	---	---	“Origin established” status continues.	“Origin not established” status continues.

Operation	Current status	PROGRAM mode		RUN mode or MONITOR mode	
		Origin established	Origin not established	Origin established	Origin not established
Instruction execution	Origin search performed by ORG(889)	---	---	Status changes to "Origin established."	Status changes to "Origin established."
	PV changed by INI(880)	---	---	"Origin established" status continues.	Status changes to "Origin established."
The Pulse Output Reset Bit (A54000 or A54100) goes from OFF to ON.		Status changes to "Origin not established."	"Origin not established" status continues.	Status changes to "Origin not established."	"Origin not established" status continues.

Movement Direction when Using Absolute Pulse Specification

When operating with the absolute pulse specification, the movement direction is selected automatically based on the relationship between the pulse output PV when the instruction is executed and the specified target position. The direction (CW/CCW) specified in an ACC(888) or SPED(885) instruction is not effective.

Using CW/CCW Limit Inputs for Pulse Output Functions Other than Origin Searches

Pulse outputs will stop when either the CW or CCW limit input signals turns ON. It is also possible to select whether or not the established origin will be cleared when a CW or CCW limit input signal turns ON for an origin search or other pulse output function.

S-curve Acceleration/Deceleration

S-curve acceleration/deceleration can be used for pulse output instructions involving acceleration/deceleration. When there is leeway in the maximum allowable speed, S-curve accelerations/decelerations will help control shock and vibration by reducing the initial acceleration rate in comparison with linear acceleration/deceleration.

Note The setting for S-curve acceleration/deceleration applies to all pulse outputs.

Output Pattern

The output pattern for S-curve acceleration/deceleration is shown below.

Example for PLS2(887)

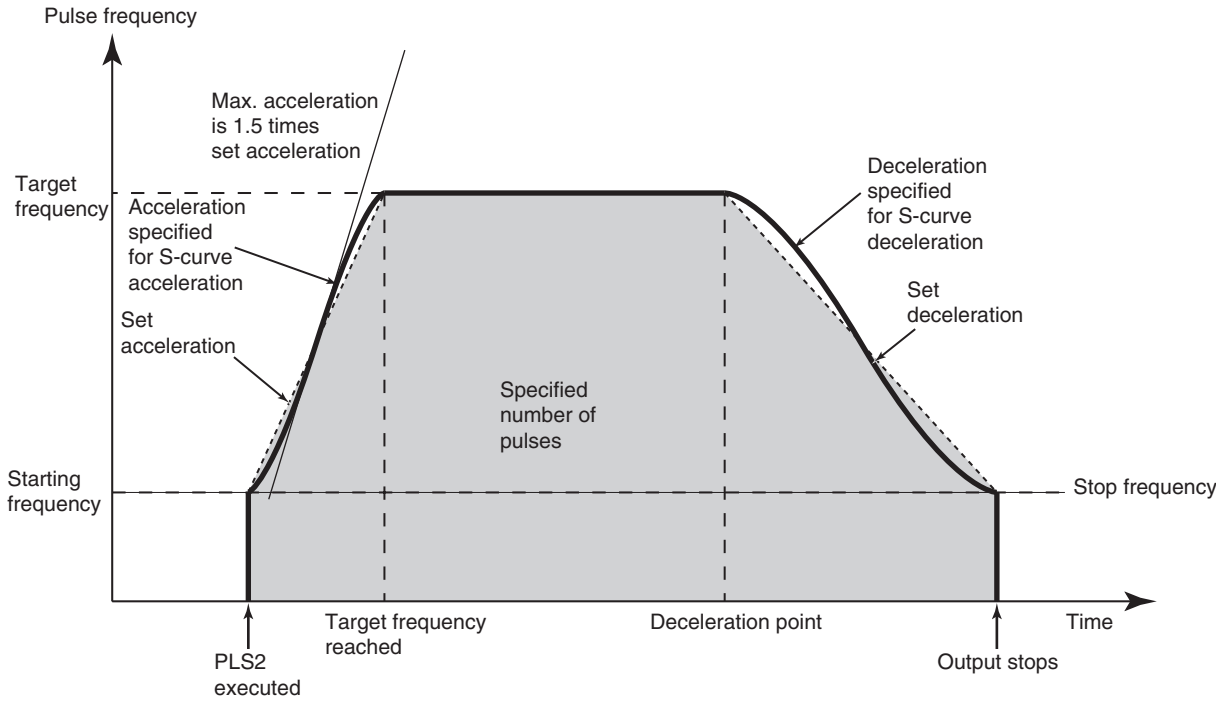

The same type of S-curve acceleration/deceleration can be used for ACC(888) as well.

Note The curve for S-curve acceleration/deceleration is formed by applying a cubic equation to the straight line of the set acceleration/deceleration rates (a cubic polynomial approximation). The curve's parameters cannot be changed.
The maximum acceleration will be 1.5 times that of trapezoidal acceleration/deceleration for the same acceleration/deceleration rate.

Procedure

Make the following settings in the PLC Setup.

Pulse Output 0 to 3

Speed Curve	Trapezium	When a pulse output is executed with acceleration/deceleration, this setting determines whether the acceleration/deceleration rate is linear (trapezium) or S-shaped.
	S-shaped	

Restrictions

The following restrictions apply when using S-curve acceleration/deceleration.

Starting Frequency

The starting frequency must be 100 Hz or greater. If the starting frequency is set to less than 100 Hz, it will automatically be increased to 100 Hz if S-curve acceleration/deceleration is set.

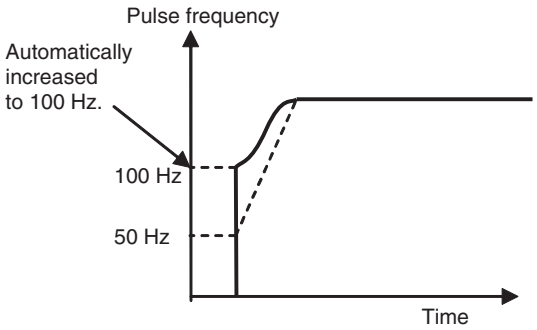

Target Frequency

S-curve acceleration/deceleration will not be performed if the target frequency is less than 100 Hz.

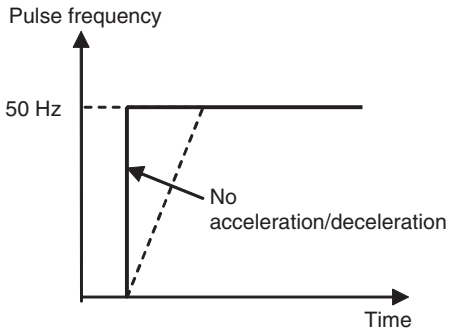

Precautions when using the Pulse Output Function

The CP1L CPU Unit's pulse output frequency is determined by dividing the source clock frequency by an integer ratio. (The source clock frequency for ports 0 and 1 is 20 MHz and the frequency for ports 2 and 3 is 16.4 MHz.) Consequently, there may be a slight difference between the set frequency and the actual frequency, and that difference increases as the frequency increases. The actual frequency can be calculated from the following equations.

Pulse Output System

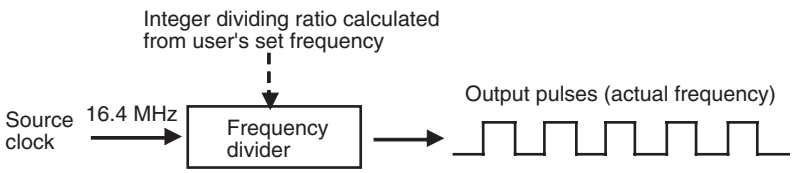

Equations

$$\text{Actual frequency (Hz)} = \frac{\text{Source clock frequency}}{\text{Dividing ratio}}$$

$$\text{Dividing ratio} = \text{INT}\left(\frac{(\text{Clock frequency} \times 2) + \text{Set frequency}}{\text{Set frequency (Hz)} \times 2}\right)$$

The INT function extracts an integer from the fraction. The non-integer remainder is rounded.

Differences between Set Frequencies and Actual Frequencies

• Source clock frequency: 16.4 MHz

Set frequency (kHz)	Actual frequency (kHz)
99.696 to 100.000	100.000
99.093 to 99.696	99.393
98.498 to 99.093	98.795
:	:
50.076 to 50.229	50.152
49.923 to 50.076	50.000
49.772 to 49.923	49.848
:	:
20.012 to 20.036	20.024
19.987 to 20.012	20.000
19.963 to 19.987	19.975
:	:
10.003 to 10.009	10.006
9.996 to 10.003	10.000
9.990 to 9.996	9.993
:	:
5.000 to 5.002	5.001
4.999 to 5.000	5.000
4.997 to 4.999	4.998
:	:
3.001 to 3.001	3.001
3.000 to 3.000	3.000
2.998 to 2.999	2.999

5-2-5 Origin Search and Origin Return Functions

The CP1L CPU Units have two functions that can be used to determine the machine origin for positioning.

1,2,3... 1. Origin Search
The ORG instruction outputs pulses to turn the motor according to the pattern specified in the origin search parameters. As the motor turns, the origin search function determines the machine origin from the following 3 kinds of position input signals.

- Origin input signal
- Origin proximity input signal
- CW limit input signal and CCW limit input signal

2. Changing the Pulse Output PV
   When you want to set the current position as the origin, execute INI(880) to reset the pulse output PV to 0.

The origin location can be determined after using either method.

The CP1L CPU Units are also equipped with the origin return function, which can be executed to return the system to the origin after the origin location has been determined by one of the methods above.

- Origin Return
  If the motor is stopped, ORG(889) can be executed to perform an origin return operation that moves the motor back to the origin position. The origin position must be determined in advance by performing an origin search or changing the pulse output PV.

Note The motor can be moved even if the origin position has not been determined, but positioning operations will be limited as follows:

- Origin return: Cannot be used.
- Positioning with absolute pulse specification: Cannot be used.
- Positioning with relative pulse specification: Outputs the specified number of pulses after setting the current position to 0.

5-2-5-1 Origin Search

When ORG(889) executes an origin search, it outputs pulses to actually move the motor and determines the origin position using the input signals that indicate the origin proximity and origin positions.

The input signals that indicate the origin position can be received from the servomotor's built-in phase-Z signal or external sensors such as photoelectric sensors, proximity sensors, or limit switches.

Several origin search patterns can be selected.

In the following example, the motor is started at a specified speed, accelerated to the origin search high speed, and run at that speed until the origin proximity position is detected. After the Origin Proximity Input is detected, the motor is decelerated to the origin search low speed and run at that speed until the origin position is detected. The motor is stopped at the origin position.

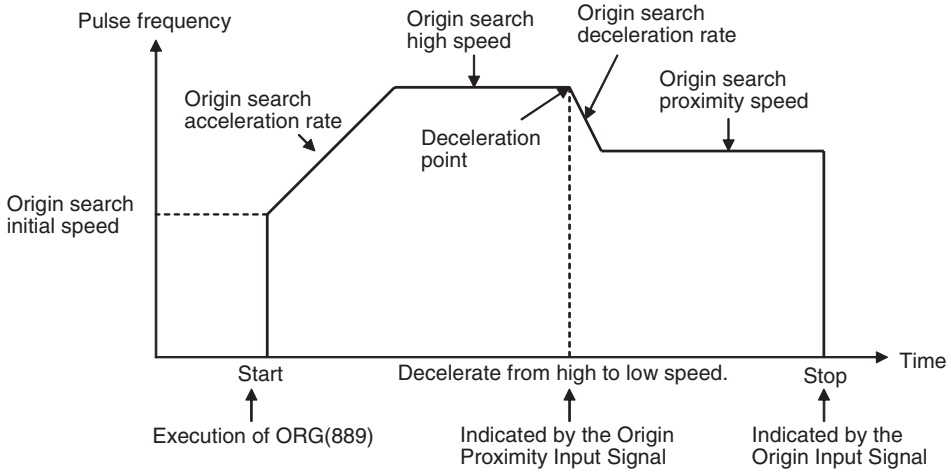

Procedure

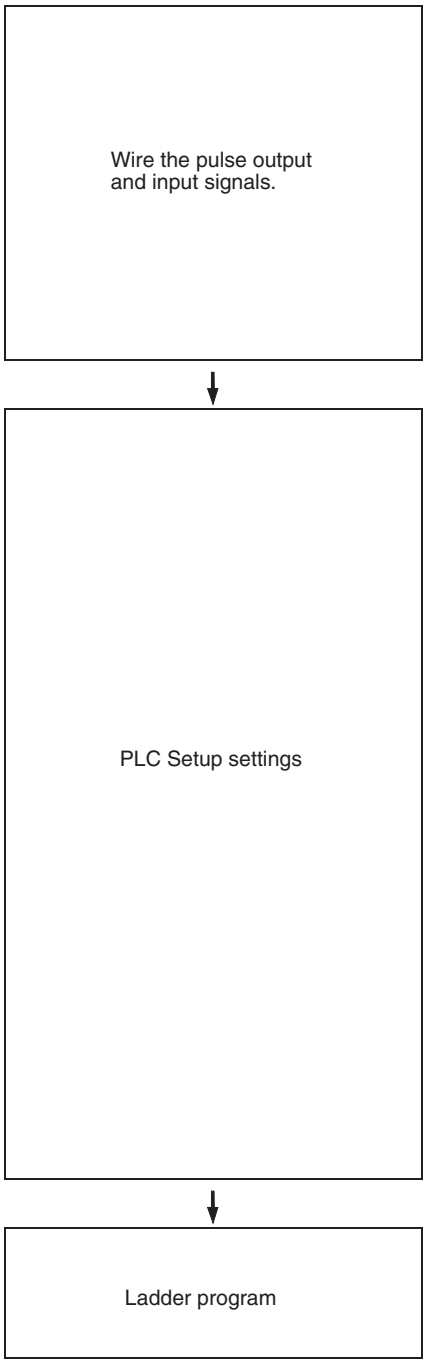

- Output: Connect the outputs using the CW/CCW method or pulse + direction method. The same method must be used for all of the pulse outputs. Power supply for outputs: 24 V DC
- Inputs: Connect the Origin input Signal, Near Origin Input Signal, and Positioning Complete Signal to the built-in input terminals allocated to the pulse output being used.
  The limit inputs must be connected to available normal input terminals or terminals and output from the ladder program.

- Enable the origin search function for pulse output 0 to 3 by setting the Origin Search Function Enable/Disable setting to 1.
- Limit Input Signal Settings
  Limit Input Signal Operation and Undefine Origin Settings
- Acceleration/Deceleration Curve Setting
- Other Parameter Settings

1. Operation Mode
   - Set the best operation mode for the driver being used (servomotor or stepping motor.)
   - Set "mode 0" when driving a stepping motor. Set "mode 1" or "mode 2" when driving a servomotor.
2. Set the origin search operation setting.
3. Set the origin detection method.
4. Set the origin search direction (CW or CCW.)
5. Set the origin search speeds:
   Initial speed for origin search/origin return, origin search high speed, origin search proximity speed, origin search acceleration rate, and origin search deceleration rate
6. Origin Compensation
   After the origin has been determined, the origin compensation can be set to compensate for a shift in the Proximity Sensor's ON position, motor replacement, or other change.
7. Set the Origin Proximity Input Signal type, Origin Input Signal type, and Limit Input Signal type.
8. Set the Positioning Monitor Time.

- Output the status of the Limit Signal Inputs and Positioning Completed Signal to Auxiliary Area bits.
- Execute ORG(889).
  Specify the origin search operation by setting the third operand to 0000.

Restrictions

- The Phase-Z signal + Software reset method cannot be used for a high-speed counter when the origin search function has been enabled in the PLC Setup.

PLC Setup

■ **Origin Search Function Enable/Disable Settings**

These PLC Setup indicate whether or not the origin search function will be used for each pulse output.

■ **Limit Input Signal Setting**

Specify in the following PLC Setup whether to use the CW/CCW limit input signals only for origin searches or for all pulse output functions. These settings affect all pulse outputs.

(This setting is called the *Limited Input Signal Operation* setting.)

■ **Pulse Output 0 Undefined Origin Setting**

■ **Acceleration/Deceleration Curve Settings**

Note The acceleration/deceleration curve setting applies to all pulse outputs, not just to origin searches. Refer to S-curve Acceleration/Deceleration on page 217 for details.

Origin Search Parameters

The various origin search parameters are set in the PLC Setup.

Name		Settings	Time when read
Operating mode		Operating mode 0, 1, or 2	Start of operation
Origin search operation setting		0: Reversal mode 1 1: Reversal mode 2	Start of operation
Origin detection method		0: Read the Origin Input Signal after the Origin Proximity Input Signal goes from OFF→ON→OFF. 1: Read the Origin Input Signal after the Origin Proximity Input Signal goes from OFF→ON. 2: Just read the Origin Input Signal without using the Origin Proximity Input Signal.	Start of operation
Origin search direction		0: CW direction 1: CCW direction	Start of operation
Origin search speed (See note.)	Origin search/ return initial speed	00000000 to 000186A0 hex (0 Hz to 100 kHz)	Start of operation
	Origin search high speed	00000001 to 000186A0 hex (1 Hz to 100 kHz)	Start of operation
	Origin search proximity speed	Same as above.	Start of operation
	Origin search acceleration rate	0001 to FFFF hex (1 to 65,535 Hz/4 ms)	Start of operation
	Origin search deceleration rate	0001 to FFFF hex (1 to 65,535 Hz/4 ms)	Start of operation
Origin compensation		8000 0000 to 7FFF FFFF hex (−2147483648 to 2147483647)	Start of operation
I/O settings		Limit Input Signal type 0: Normally closed (NC) 1: Normally open (NO)	Start of operation
		Origin Proximity Input Signal type 0: Normally closed (NC) 1: Normally open (NO)	Start of operation
		Origin Input Signal type 0: Normally closed (NC) 1: Normally open (NO)	When power is turned ON
Positioning monitor time		0000 to 270F hex (0 to 9,999 ms)	Start of operation

Note An origin search will not be started unless the origin search proximity speed is less than the origin search high speed and unless the origin search/return initial speed is less than the origin search proximity speed.

Explanation of the Origin Search Parameters

Operating Mode

The operating mode parameter specifies the kind of I/O signals that are used in the origin search. The 3 operating modes indicate whether the Error Counter Reset Output and Positioning Completed Input are used.

Operating mode	I/O signal			Remarks
	Origin Input Signal	Error Counter Reset Output	Positioning Completed Input	Operation when the origin is detected during deceleration from the origin search's high speed
0	The origin position is determined when the Origin Input Signal goes from OFF to ON.	Not used. The origin search operation ends after the origin is detected.	Not used.	The Origin Input Signal will be detected during deceleration. An Origin Input Signal Error (error code 0202) will occur and the motor will decelerate to a stop.
1		Goes ON for 20 to 30 ms when the origin is detected.		The Origin Input Signal will not be detected during deceleration. When the Origin Input Signal is detected after the motor has reached the proximity speed for origin search, the motor will be stopped and the origin search operation will end.
2			After the origin is detected, the origin search will not be end until the Positioning Completed Input is received from the driver.	

The following table shows the proper operating mode settings for different drivers and applications.

Driver	Remarks	Operating mode
Stepping motor driver (See note.)		0
Servo driver	Use this mode when you want to reduce the processing time, even at the expense of positioning accuracy. (The Servo Driver's positioning complete signal is not used.)	1
	Use this mode when you want high positioning accuracy. (The Servo Driver's positioning complete signal is used.)	2

Note There are stepping motor drivers that are equipped with a positioning completed signal like a Servo driver. Operating modes 1 and 2 can be used with these stepping motor drivers.

■ Remarks: Operations Detecting the Origin During Deceleration from High Speed

Operating Mode 0 (without Error Counter Reset Output, without Positioning Completed Input)

Connect the sensor's open collector output signal to the Origin Input Signal. The Origin Input Signal's response time is 0.1 ms when set as a NO contact.

When the Origin Proximity Input Signal is received, the motor will begin decelerating from the origin search high speed to the origin search proximity speed. In this operating mode, the Origin Input Signal will be detected if it is received during this deceleration and an Origin Input Signal Error (error code 0202) will be generated. In this case, the motor will decelerate to a stop.

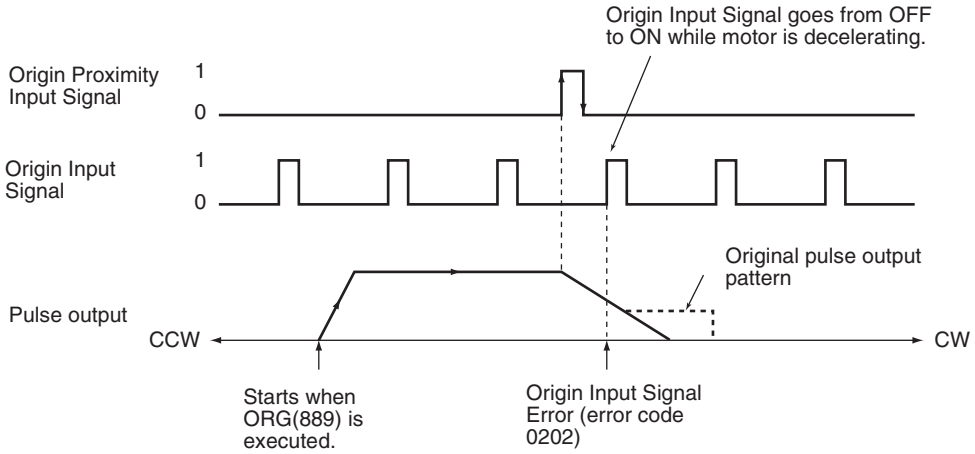

Operating Mode 1 (with Error Counter Reset Output, without Positioning Completed Input)

Connect the phase-Z signal from the Servo Driver to the Origin Input Signal.

When the Origin Input Signal is received, the pulse output will be stopped and the Error Counter Reset Signal will be output for about 20 to 30 ms.

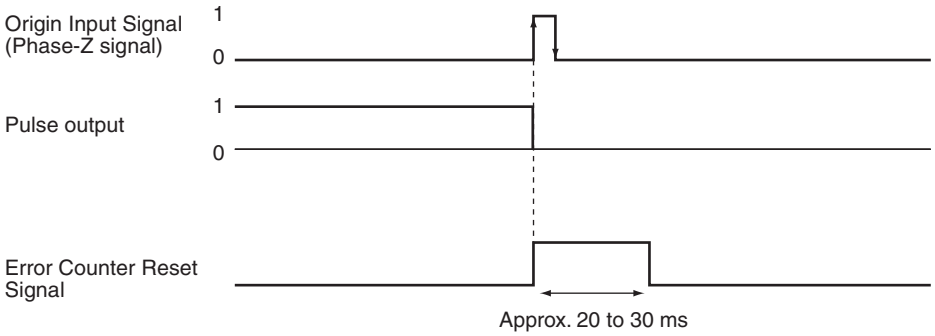

When the Origin Proximity Input Signal is received, the motor will begin decelerating from the origin search high speed to the origin search proximity speed. In this operating mode, the motor will stop at the Origin Input Signal after deceleration is completed.

Operating Mode 1 with Origin Proximity Input Signal Reverse (Origin Detection Method Setting = 0)

When the deceleration time is short, the Origin Input Signal can be detected immediately after the Origin Proximity Input Signal goes from ON to OFF. Set

a Origin Proximity Input Signal dog setting that is long enough (longer than the deceleration time.)

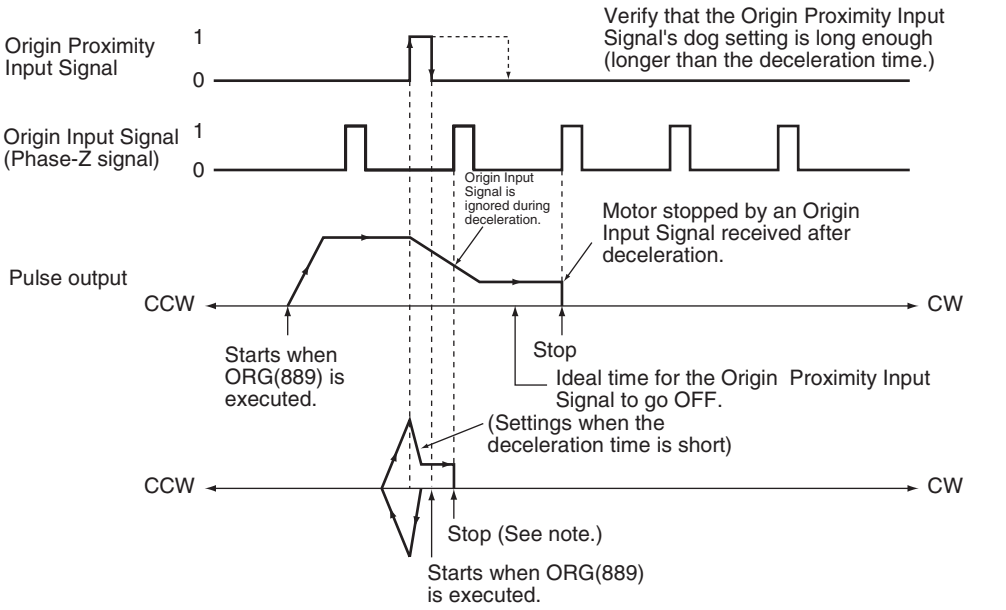

Note: The Origin Input Signal can be detected immediately after the Origin Proximity Input Signal goes from ON to OFF if the deceleration time is short, e.g., starting from within the Origin Proximity Input Signal.

Operating Mode 1 without Origin Proximity Input Signal Reverse (Origin Detection Method Setting = 1)

Depending on the length of the deceleration time, the stopping position may change when the Origin Input Signal is detected during deceleration.

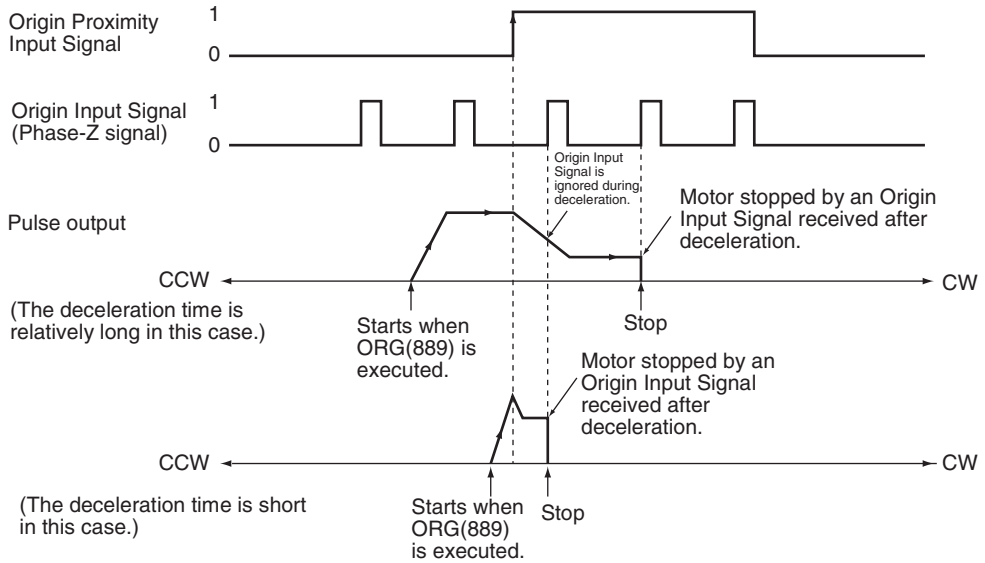

Operating Mode 2 (with Error Counter Reset Output, with Positioning Completed Input)

This operating mode is the same as mode 1, except the Positioning Completed Signal (INP) from the Servo Driver is used. Connect the Positioning Completed Signal from the Servo Driver to a normal input (origin search 0 to 3 input).

If origin compensation is not being applied, the Positioning Completed Signal is checked after the Error Counter Reset Output. If origin compensation is being applied, the Positioning Completed Signal is checked after the compensation operation is completed.

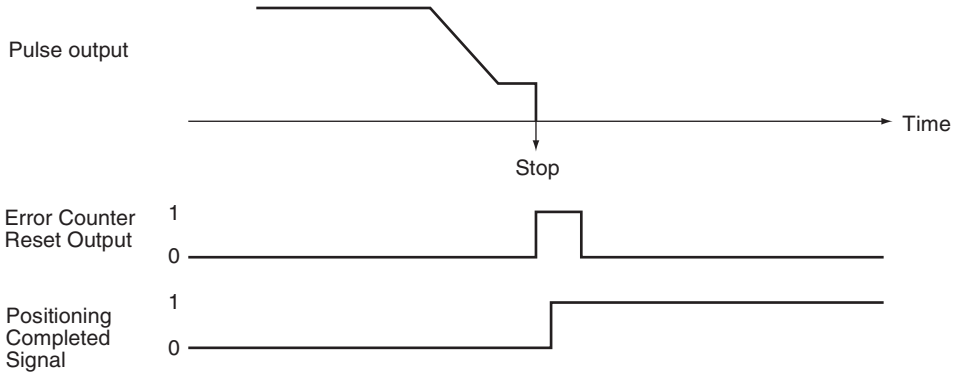

Origin Search Operation Setting

Select either of the following two reverse modes for the origin search operation pattern.

Setting	Description
0: Reversal mode 1	When the limit input signal is received in the origin search direction, reverse and continue operation.
1: Reversal mode 2	When the limit input signal is received in the origin search direction, generate an error and stop operation.

Origin Detection Method

The origin detection method depends on the Origin Proximity Input Signal settings. Select one of the following three methods in each port's parameters.

Setting	Description
0: Origin Proximity Input Signal reversal required.	Reads the first Origin Input Signal after the Origin Proximity Input Signal goes OFF→ON→OFF.
1: Origin Proximity Input Signal reversal not required.	Reads the first Origin Input Signal after the Origin Proximity Input Signal goes OFF→ON.
2: Origin Proximity Input Signal not used.	Just read the Origin Input Signal without using the Origin Proximity Input Signal.

Origin Detection Method 0: Origin Proximity Input Signal Reversal Required

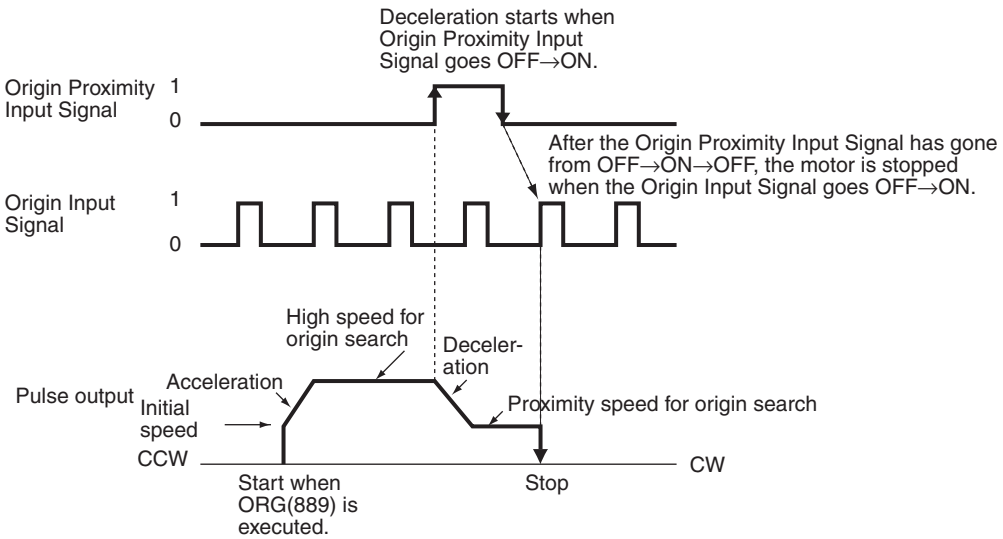

Origin Detection Method 1: Origin Proximity Input Signal Reversal Not Required

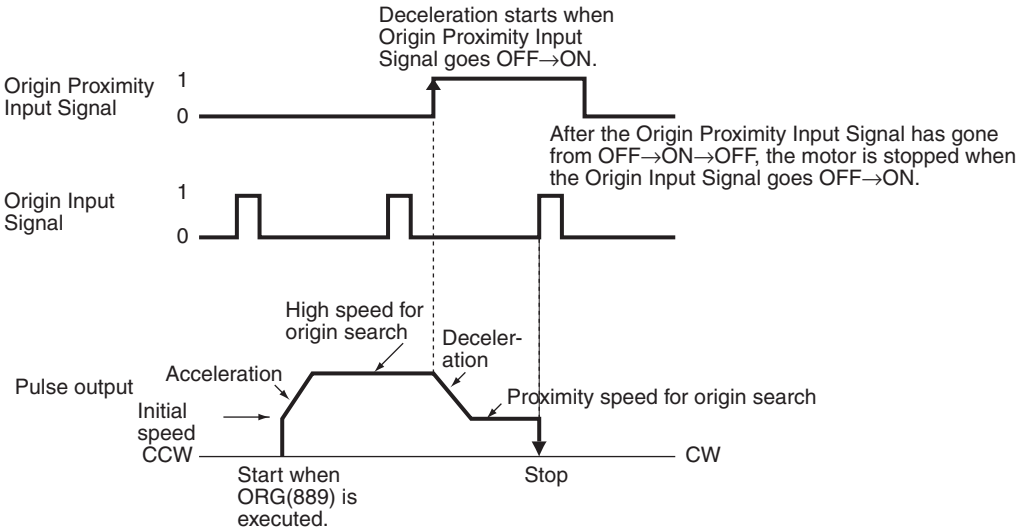

Origin Detection Method 2: Origin Proximity Input Signal Reversal Not Used

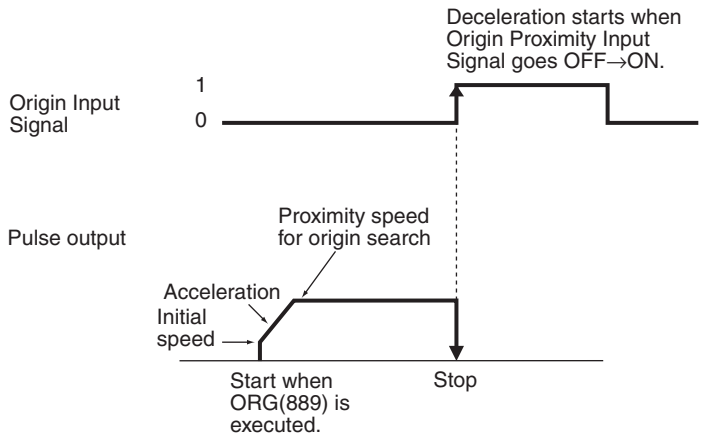

Origin Search Operating Mode and Origin Detection Method Settings

The following examples explain how the operation patterns are affected by the origin search operation and origin detection method settings.

These examples have a CW origin search direction. (The search direction and limit input signal direction would be different for an origin search in the CCW direction.)

Using Reversal Mode 1

Origin search operation **Origin detection method**	**0: Reversal mode 1**
0: Origin Proximity Input Signal reversal required.	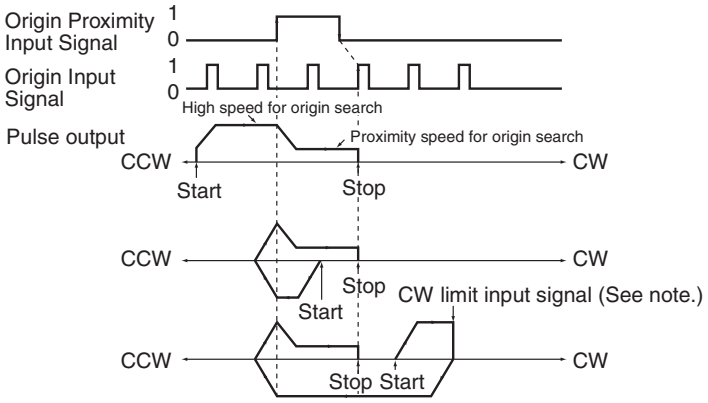 **Note** When the limit input signal is received, the motor stops without deceleration, reverses direction, and accelerates.
1: Origin Proximity Input Signal reversal not required.	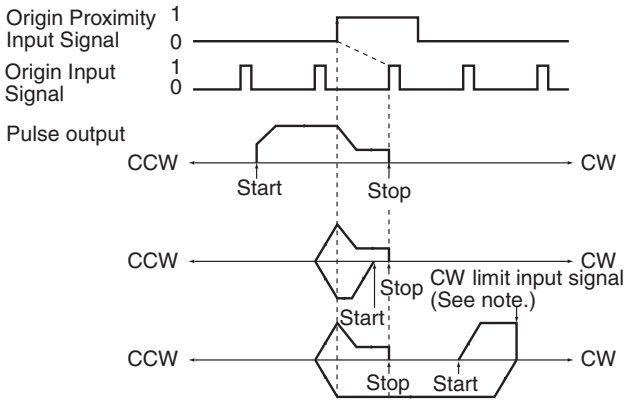 **Note** When the limit input signal is received, the motor stops without deceleration, reverses direction, and accelerates.
2: Origin Proximity Input Signal not used.	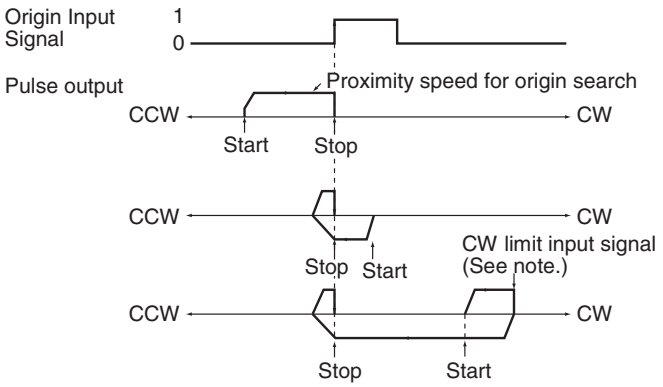 **Note** When the direction of operation is reversed, it is reversed immediately without deceleration or acceleration.

Using Reversal Mode 2

Origin search operation **Origin detection method**	**1: Reversal mode 2**
0: Origin Proximity Input Signal reversal required.	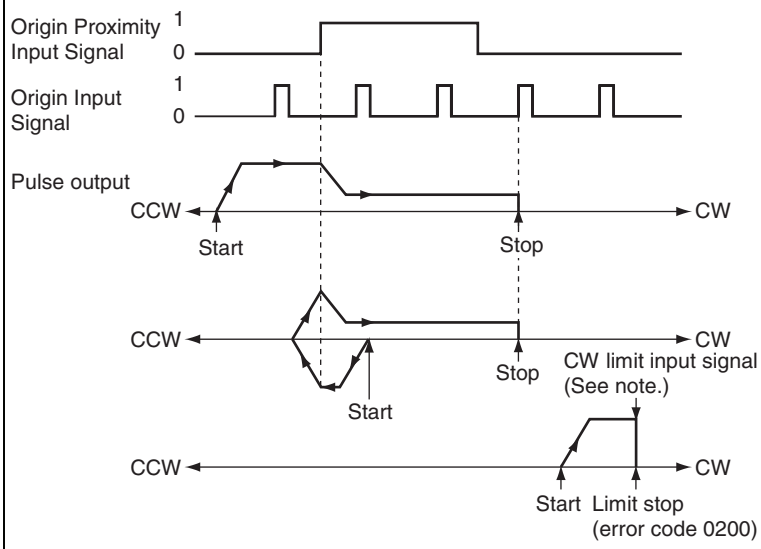 **Note** When the limit input signal is received, the motor stops without deceleration.
1: Origin Proximity Input Signal reversal not required.	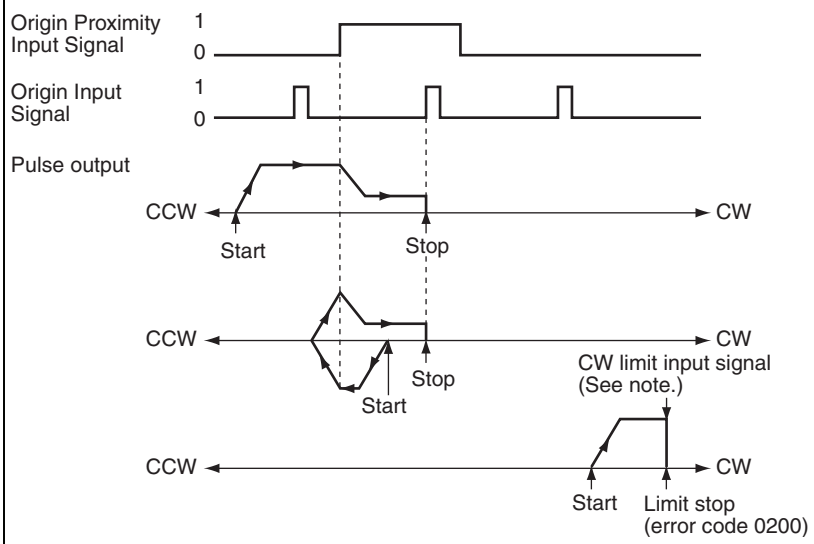 **Note** When the limit input signal is received, the motor stops without deceleration.

Origin search operation / Origin detection method	1: Reversal mode 2
2: Origin Proximity Input Signal not used.	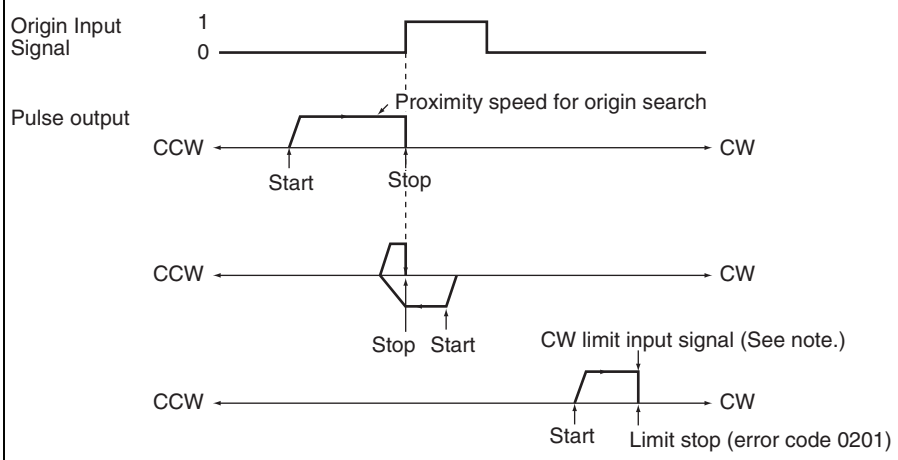 **Note** When the limit input signal is received, the motor stops without deceleration.

Specifying the Origin Search Direction (CW or CCW Direction)

Sets the direction to move when detecting the Origin Input Signal.

Typically, the origin search is performed so that the Origin Input Signal's rising edge is detected when moving in the origin search direction.

Setting	Description
0	CW direction
1	CCW direction

Origin Search Speed

These are the motor speed settings used in the origin search.

Note The origin search will not be performed in these cases:
Origin search high speed ≤ Origin search proximity speed
Origin search proximity speed ≤ Origin search initial speed

Origin Search/Return Initial Speed

Sets the motor's starting speed when the origin search is executed. Specify the speed in the number of pulses per second (pps).

Origin Search High Speed

Sets the motor's target speed when the origin search is executed. Specify the speed in the number of pulses per second (pps).

Origin Search Proximity Speed

Sets the motor's speed after the Origin Proximity Input Signal is detected. Specify the speed in the number of pulses per second (pps).

Origin Search Acceleration Rate

Sets the motor's acceleration rate when the origin search is executed. Specify the amount to increase the speed (Hz) per 4-ms interval.

Origin Search Deceleration Rate

Sets the motor's acceleration rate when the origin search function is decelerating. Specify the amount to decrease the speed (Hz) per 4-ms interval.

Origin Compensation

After the origin has been determined, the origin compensation can be set to compensate for a shift in the Proximity Sensor's ON position, motor replacement, or other change.

Once the origin has been detected in an origin search, the number of pulses specified in the origin compensation is output, the current position is reset to 0, and the pulse output's No-origin Flag is turned OFF.

Setting range: 8000 0000 to 7FFF FFFF hex (–2,147,483,648 to 2,147,483,647) pulses

I/O Settings

Limit Input Signal Type (NC/NO)

Specifies the type of input signal (normally closed or normally open) being used for the limit inputs.

0: NC

1: NO

Origin Proximity Input Signal Type (NC/NO)

Specifies the type of input signal (normally closed or normally open) being used for the Origin Proximity Input Signal.

0: NC

1: NO

Origin Input Signal Type (NC/NO)

Specifies the type of input signal (normally closed or normally open) being used for the Origin Input Signal.

0: NC

1: NO

Positioning Monitor Time

When the operating mode is set to mode 2, this setting specifies how long to wait (in ms) for the Positioning Completed Signal after the positioning operation has been completed, i.e., the pulse output has been completed. A Positioning Timeout Error (error code 0300) will be generated if the motor driver's Positioning Completed Signal does not come ON within the specified time.

Setting range: 0000 to 270F hex (0 to 9,999 ms)

The actual monitoring time will be the Positioning Monitor Time rounded up to the nearest 10-ms unit + 10 ms max.

If the Positioning Monitor Time is set to 0, the function will be disabled and the Unit will continue waiting for the Positioning Completed Signal to come ON. (A Positioning Timeout Error will not be generated.)

Executing an Origin Search

Execute ORG(889) in the ladder program to perform an origin search with the specified parameters.

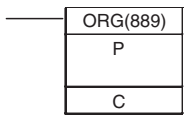

P: Port specifier
Pulse output 0: #0000
Pulse output 1: #0001
C: Control data; Origin search and CW/CCW method: #0000
Origin search and pulse + direction method: #0001

Restrictions

The motor can be moved even if the origin position has not been determined with the origin search function, but positioning operations will be limited as follows:

Function	Operation
Origin return	Cannot be used.

Function	Operation
Positioning with absolute pulse specification	Cannot be used.
Positioning with relative pulse specification	Outputs the specified number of pulses after setting the current position to 0.

An origin search will not be started unless the origin search proximity speed is less than the origin search high speed and unless the origin search/return initial speed is less than the origin search proximity speed.

Origin Search Error Processing

The CP1L CPU Unit's pulse output function performs a basic error check before starting to output pulses (when the instruction is executed) and will not output pulses if the settings are incorrect. There are other errors that can occur with the origin search function during pulse output, which may stop the pulse output.

If an error occurs that stops pulse output, the pulse output's Output Stopped Error Flag will be turned ON and the Pulse Output Stop Error Code will be written to Error Code word. Use these flags and error codes to identify the cause of the error.

The Pulse Output Stop Errors will not affect the CPU Unit's operating status. (The Pulse Output Stop Errors do not cause a fatal or non-fatal error in the CPU Unit.)

Related Auxiliary Area Flags

Function		Pulse output number	
		0	1
Output Stopped Error Flags ON when an error occurred while outputting pulses in the origin search function.	0: No error 1: Stop error occurred.	A280.07	A281.07
Stop Error Codes When a Pulse Output Stop Error occurs, the error code is stored in that pulse outputs corresponding Stop Error Code word.		A444	A445

Pulse Output Stop Error Codes

Error name	Error code	Likely cause	Corrective action	Operation after error
CW Limit Stop Input Signal	0100	Stopped due to a CW limit signal input.	Move in the CCW direction.	Immediate stop, No effect on other port
CCW Limit Stop Input Signal	0101	Stopped due to a CCW limit signal input.	Move in the CW direction.	
No Origin Proximity Input Signal	0200	The parameters indicate that the Origin Proximity Input Signal is being used, but a Origin Proximity Input Signal was not received during the origin search.	Check the wiring of the Origin Proximity Input Signal as well as the PLC Setup's Origin Proximity Input Signal Type setting (NC or NO) and execute the origin search again. Turn the power supply OFF and then ON if the signal type setting was changed.	No effect on other port
No Origin Input Signal	0201	The Origin Input Signal was not received during the origin search.	Check the wiring of the Origin Input Signal as well as the PLC Setup's Origin Input Signal Type setting (NC or NO) and execute the origin search again. Turn the power supply OFF and then ON if the signal type setting was changed.	

Error name	Error code	Likely cause	Corrective action	Operation after error
Origin Input Signal Error	0202	During an origin search in operating mode 0, the Origin Input Signal was received during the deceleration started after the Origin Proximity Input Signal was received.	Take one or both of the following steps so that the Origin Input Signal is received after deceleration is completed. •Increase the distance between the Origin Proximity Input Signal sensor and Origin Input Signal sensor. •Decrease the difference between the origin search's high speed and proximity speed settings.	Decelerates to a stop, No effect on other port
Limit Inputs in Both Directions	0203	The origin search cannot be performed because the limit signals for both directions are being input simultaneously.	Check the wiring of the limit signals in both directions as well as the PLC Setup's Limit Signal Type setting (NC or NO) and execute the origin search again. Turn the power supply OFF and then ON if the signal type setting was changed.	Operation will not start. No effect on other port
Simultaneous Origin Proximity and Limit Inputs	0204	The Origin Proximity Input Signal and the Limit Input Signal in the search direction are being input simultaneously during an origin search.	Check the wiring of the Origin Proximity Input Signal and the Limit Input Signal. Also check the PLC Setup's Origin Proximity Input Signal Type and Limit Signal Type settings (NC or NO) and then execute the origin search again. Turn the power supply OFF and then ON if a signal type setting was changed.	Immediate stop, No effect on other port
Limit Input Signal Already Being Input	0205	•When an origin search in one direction is being performed, the Limit Input Signal is already being input in the origin search direction. •When a non-regional origin search is being performed, the Origin Input Signal and the Limit Input Signal in the opposite direction (from the search direction) are being input simultaneously.	Check the wiring of the Limit Input Signal and the PLC Setup's I/O settings. Also check the PLC Setup's Limit Signal Type setting (NC or NO) and then execute the origin search again. Turn the power supply OFF and then ON if the signal type setting was changed.	Immediate stop, No effect on other port
Origin Proximity Input Signal Origin Reverse Error	0206	•When an origin search with reversal at the limit is being performed, the Limit Input Signal in the search direction was input while the Origin Proximity Input Signal was reversing. •When an origin search with reversal at the limit is being performed and the Origin Proximity Input Signal is not being used, the Limit Input Signal in the search direction was input while the Origin Input Signal was reversing.	Check the installation positions of the Origin Proximity Input Signal, Origin Input Signal, and Limit Input Signal as well as the PLC Setup's I/O settings. Also check the PLC Setup's Signal Type settings (NC or NO) for each input signal and then execute the origin search again. Turn the power supply OFF and then ON if a signal type setting was changed.	Immediate stop, No effect on other port
Positioning Timeout Error	0300	The Servo Driver's Positioning Completed Signal does not come ON within the Positioning Monitor Time specified in the PLC Setup.	Adjust the Positioning Monitor Time setting or Servo system gain setting. Check the Positioning Completed Signal wiring, correct it if necessary, and then execute the origin search again.	Decelerates to a stop, No effect on other port

Origin Search Examples

Operation

Connect a Servo Driver and execute an origin search based on the Servomotor's built-in encoder phase-Z signal and a Origin Proximity Input Signal.

Conditions

- Operating mode: 1
  (Uses the Servomotor encoder's phase-Z signal as the Origin Input Signal.)
- Origin search operation setting: 0
  (Sets reverse mode 1. Reverses direction when the limit input signal is input in the origin search direction.)
- Origin detection method: 0
  (Reads the Origin Input Signal after the Origin Input Signal goes OFF→ON→OFF.)
- Origin search direction: 0 (CW direction)

System Configuration

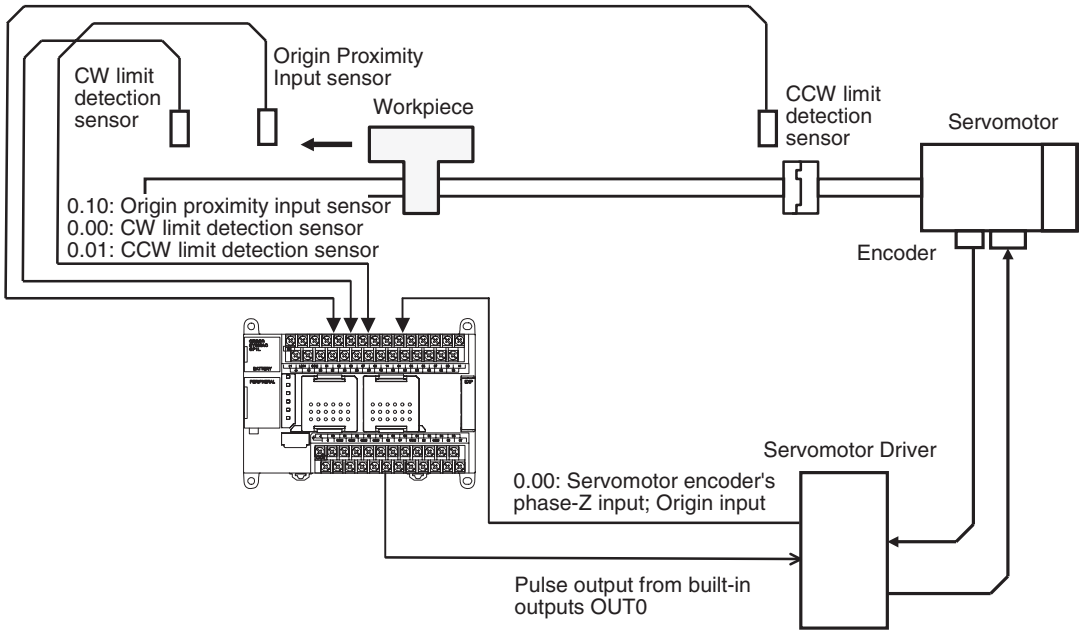

Instructions Used

ORG(889)

I/O Allocations (Example: CP1L-M40/30 DT□-D, CP1L-L20D□-D Units)

■ **Inputs**

Input terminal		Name
Word	Bit	
CIO 0	00	CW limit detection sensor
	01	CCW limit detection sensor
	06	Pulse Output 0 Origin Input Signal
	10	Pulse Output 0 Origin Proximity Input Signal

Word	Bit	Name
A540	08	Pulse Output 0 CW Limit Input Signal
	09	Pulse Output 0 CCW Limit Input Signal

■ **Outputs**

Output terminal		Name
Word	Bit	
CIO 100	00	Pulse Output 0 CW output
	01	Pulse Output 0 CCW output

Operation

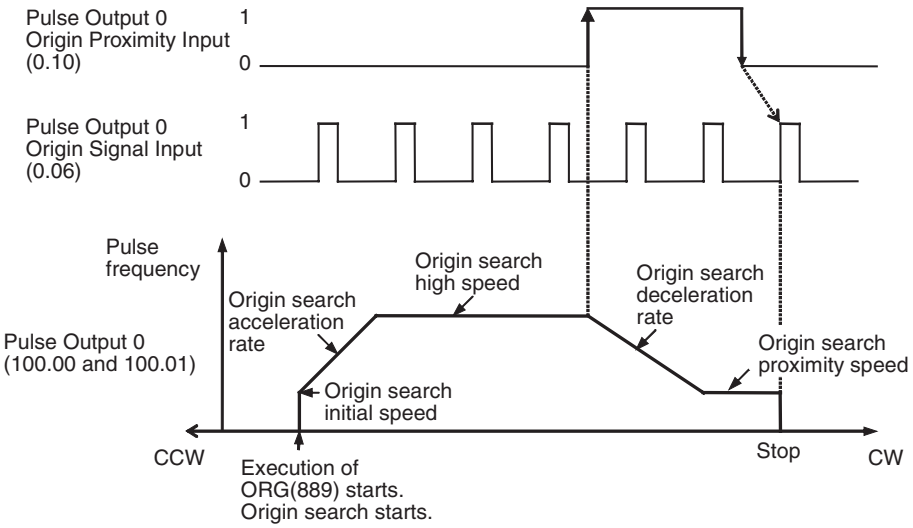

PLC Setup

Function	Setting (example)
Pulse Output 0 Origin Search Function Enable/Disable	1 hex: Enabled
Pulse Output 0 Origin Search Operating Mode	1 hex: Mode 1
Pulse Output 0 Origin Search Operation Setting	0 hex: Reverse mode 1
Pulse Output 0 Origin Detection Method	0 hex: Origin detection method 0
Pulse Output 0 Origin Search Direction Setting	0 hex: CW direction
Pulse Output 0 Origin Search/Return Initial Speed	0064 hex (100 pps)
	0000 hex
Pulse Output 0 Origin Search High Speed	07D0 hex (2,000 pps)
	0000 hex

Function	Setting (example)
Pulse Output 0 Origin Search Proximity Speed	03E8 hex (1,000 pps)
	0000 hex
Pulse Output 0 Origin Compensation	0000 hex
	0000 hex
Pulse Output 0 Origin Search Acceleration Rate	0032 hex (50 Hz/4 ms)
Pulse Output 0 Origin Search Deceleration Rate	0032 hex (50 Hz/4 ms)
Pulse Output 0 Limit Input Signal Type	1: NO
Pulse Output 0 Origin Proximity Input Signal Type	1: NO
Pulse Output 0 Origin Input Signal Type	1: NO

Ladder Program

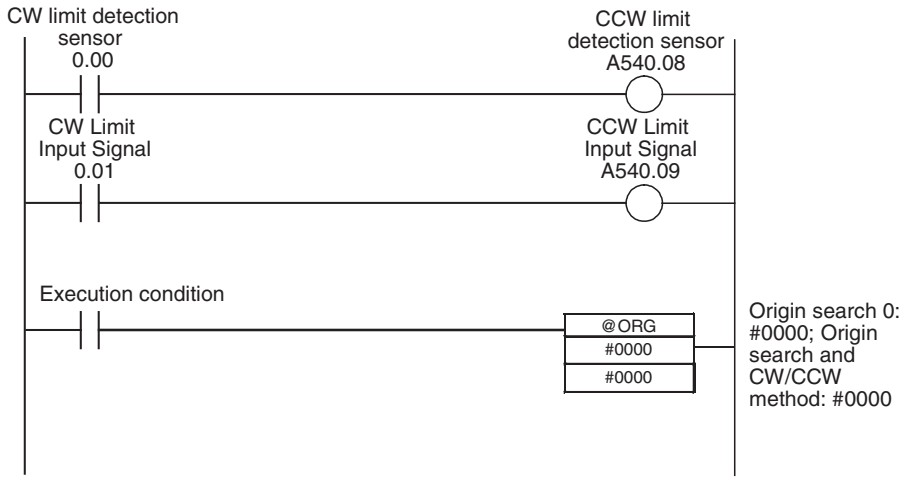

5-2-6 Origin Return

Overview

Moves the motor to the origin position from any other position. The origin return operation is controlled by ORG(889).

The origin return operation returns the motor to the origin by starting at the specified speed, accelerating to the target speed, moving at the target speed, and then decelerating to a stop at the origin position.

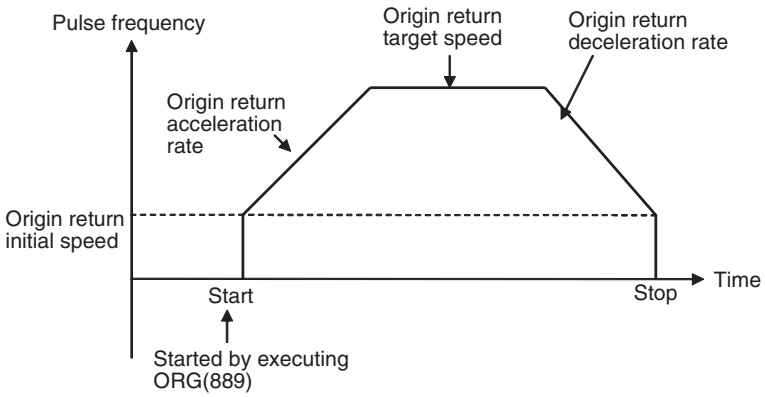

Procedure

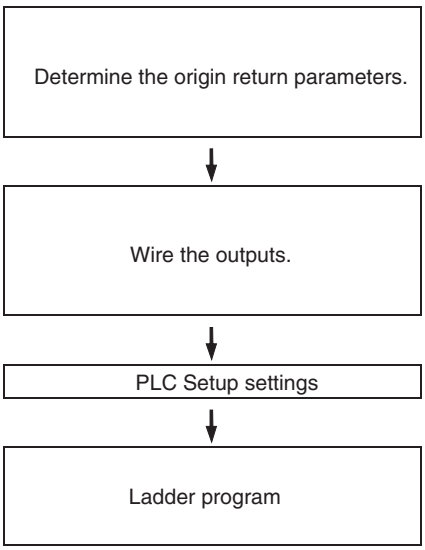

1. Starting Speed for Origin Search and Origin Return
2. Origin return target speed
3. Origin return acceleration rate
4. Origin return deceleration rate

- Outputs: Use either the CW/CCW method or Pulse + direction method. The same method must be used for both pulse output 0 and pulse output 1.
- Various origin return parameter settings
- Execution of ORG(889)
  To specify the origin return operation, set bits 12 to 15 of the second operand to 1 hex.

PLC Setup

The various origin return parameters are set in the PLC Setup.

Origin Return Parameters

Name	Settings	Remarks
Origin search/return initial speed	00000000 to 000186A0 hex (0 Hz to 100 kHz)	Start of operation
Origin return target speed	00000001 to 000186A0 hex (1 Hz to 100 kHz)	
Origin return acceleration rate	0001 to FFFF hex (1 to 65,535 Hz/4 ms)	
Origin return deceleration rate	0001 to FFFF hex (1 to 65,535 Hz/4 ms)	

Explanation of the Origin Return Parameters

Origin Search/Return Initial Speed
Sets the motor's starting speed when the origin return is executed. Specify the speed in the number of pulses per second (pps).

Origin Return Target Speed
Sets the motor's target speed when the origin return is executed. Specify the speed in the number of pulses per second (pps).

Origin Return Acceleration Rate
Sets the motor's acceleration rate when the origin return operation starts. Specify the amount to increase the speed (Hz) per 4-ms interval.

Origin Return Deceleration Rate
Sets the motor's acceleration rate when the origin return function is decelerating. Specify the amount to decrease the speed (Hz) per 4-ms interval.

Executing an Origin Return

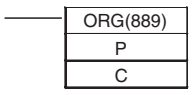

P: Port specifier (Pulse output 0: #0000, Pulse output 1: #0001)
Pulse output 0: #0000
Pulse output 1: #0001
C: Control data
(Origin return and CW/CCW method: #1000, Origin search and pulse + direction method: #1100)

Note An instruction execution error will occur if the origin is not determined (relative coordinate system) when ORG(889) is executed to perform an origin return operation.

5-2-7 Pulse Output Procedures

Single-phase Pulse Output without Acceleration/Deceleration

The number of output pulses setting cannot be changed during positioning.

■ PULS(886) and SPED(885)

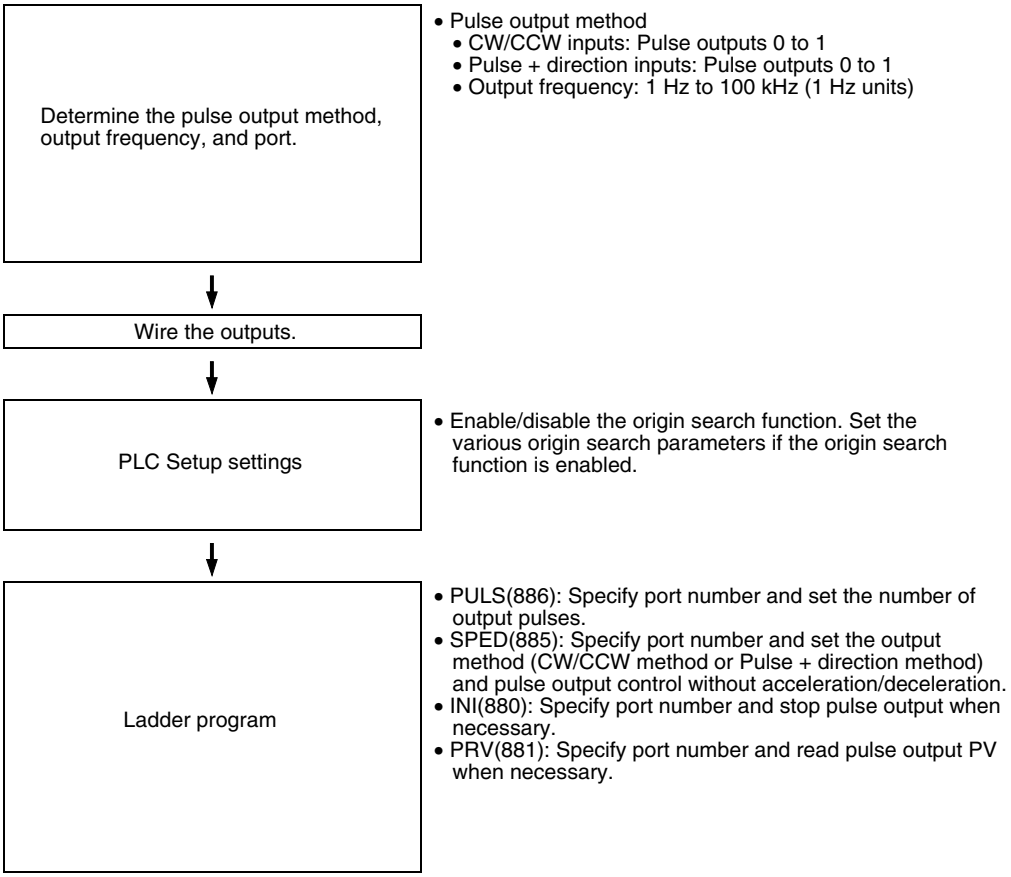

Single-phase Pulse Output with Acceleration/Deceleration

■ PULS(886) and ACC(888)

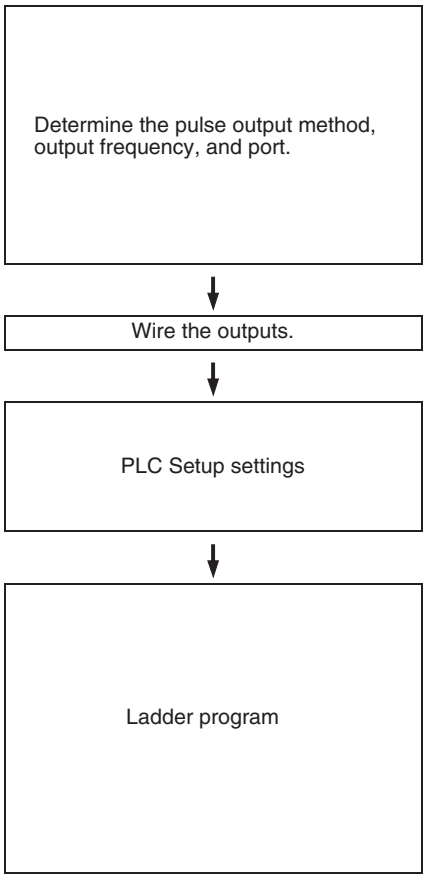

- Pulse output method
  - CW/CCW inputs
  - Pulse + direction inputs
- Output frequency: 1 Hz to 100 kHz (1 Hz units)

- Enable/disable the origin search function. Set the various origin search parameters if the origin search function is enabled.

- PULS(886): Specify port number and set the number of output pulses.
- ACC(888): Specify port number and set the output method (CW/CCW method or Pulse + direction method) and pulse output control with acceleration/deceleration (the same rate is used for both acceleration and deceleration.)
- INI(880): Specify port number and stop pulse output when necessary.
- PRV(881): Specify port number and read pulse output PV when necessary.

Pulse Output with Trapezoidal Acceleration/Deceleration (Using PLS2(887))

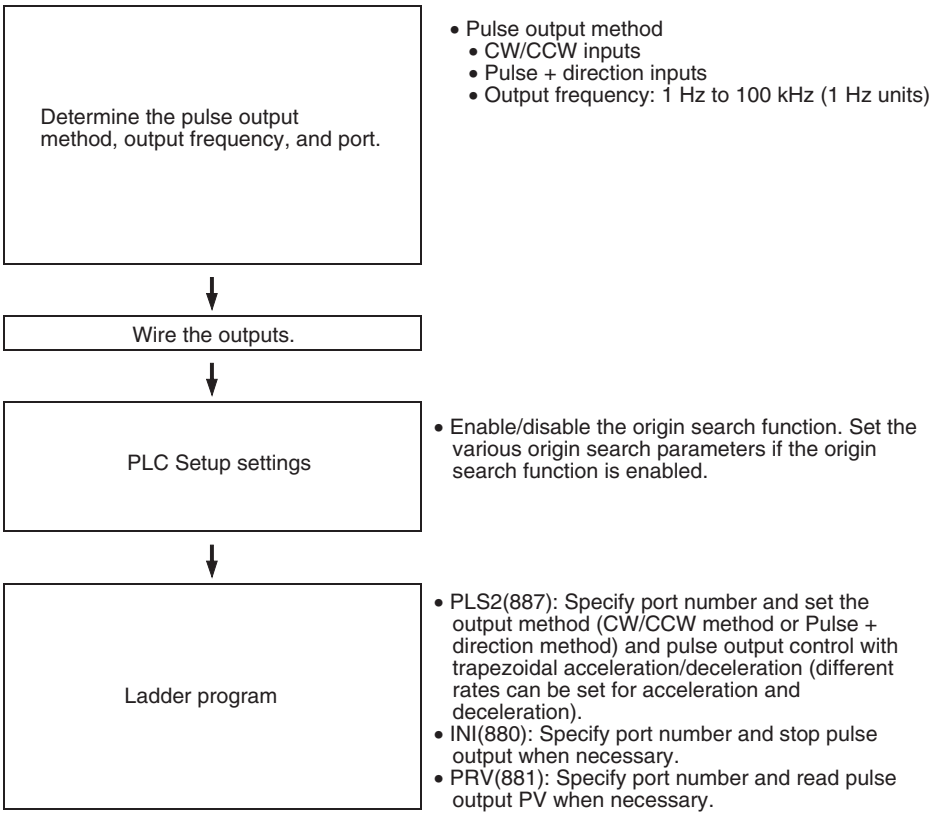

5-2-8 Instructions Used for Pulse Outputs

The pulse output functions can be used by executing the pulse control instructions in the ladder program. For some instructions, the PLC Setup must be set in advance. The following instructions can be combined for positioning and speed control.

Supported Pulse Instructions

Use the following 8 instructions to control the pulse outputs.

The following table shows the kinds of pulse outputs controlled by each instruction.

Instruction	Function	Positioning (independent mode)			Speed control (continuous mode)		Origin search
		Pulse output without acceleration/ deceleration	Pulse output with acceleration/deceleration		Pulse output without acceleration/ deceleration	Pulse output with acceleration/ deceleration	
			Trapezoidal, equal acceleration/ deceleration rates	Trapezoidal, separate acceleration/ deceleration rates			
PULS(886) SET PULSES	Sets the number of pulses to be output.	Used	---	---	---	---	---
SPED(885) SPEED OUTPUT	Performs pulse output control without acceleration or deceleration. (When positioning, the number of pulses must be set in advance with PULS(886).)	Used	---	---	Used	---	---
ACC(888) ACCELERATION CONTROL	Performs pulse output control with acceleration and deceleration. (When positioning, the number of pulses must be set in advance with PULS(886).)	---	Used	---	---	Used	---
PLS2(887) PULSE OUTPUT	Performs pulse output control with independent acceleration and deceleration rates. (Also sets the number of pulses.)	---	---	Used	---	---	---
ORG(889) ORIGIN SEARCH	Actually moves the motor with pulse outputs and determines the machine origin based on the Origin Proximity Input and Origin Input signals	---	---	---	---	---	Used
INI(880) MODE CONTROL	Stops the pulse output. Changes the pulse output PV. (This operation determines the origin location.)	Used	Used	Used	Used	Used	---
PRV(881) HIGH-SPEED COUNTER PV READ	Reads the pulse output PV.	Used	Used	Used	Used	Used	---
PWM(891) PULSE WITH VARIABLE DUTY FACTOR	Performs pulse output control with variable duty factor pulse output.	---	---	---	---	---	---

SET PULSES: PULS(886)

PULS(886) is used to set the pulse output amount (number of output pulses) for pulse outputs that are started later in the program using SPED(885) or ACC(888) in independent mode.

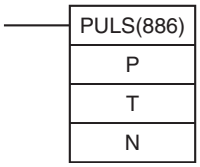

P: Port specifier

T: Pulse type

N: Number of pulses

Operand		Contents
P	Port specifier	0000 hex: Pulse output 0 0001 hex: Pulse output 1
T	Pulse type	0000 hex: Relative pulse output 0001 hex: Absolute pulse output
N	First number of pulses word	N and N+1 contain the number of pulses setting. (N contains the rightmost 4 digits and N+1 contains the leftmost 4 digits.) Relative pulse output: 0000 0000 to 7FFF FFFF hex (0 to 2,147,483,647) Absolute pulse output: 8000 0000 to 7FFF FFFF hex (-2,147,483,648 to 2,147,483,647)

SPEED OUTPUT: SPED(885)

SPED(885) can be used to perform pulse output without acceleration or deceleration. Either independent mode positioning or continuous mode speed control is possible. For independent mode positioning, the number of pulses is set using PULS(886).

SPED(885) can also be executed during pulse output to change the output frequency, creating stepwise changes in the speed.

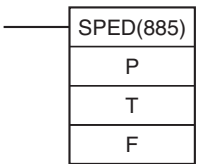

P: Port specifier

T: Output mode

F: First pulse frequency word

Operand			Contents
P	Port specifier		0000 hex: Pulse output 0 0001 hex: Pulse output 1
T	Output mode	Bits 0 to 3	Mode 0 hex: Continuous 1 hex: Independent
		Bits 4 to 7	Direction 0 hex: CW 1 hex: CCW
		Bits 8 to 11	Pulse output method (See note.) 0 hex: CW/CCW 1 hex: Pulse + direction
		Bits 12 to 15	Not used. (Always 0 hex.)
F	First pulse frequency word		F and F+1 contain the pulse frequency setting, in units of 1 Hz. (F contains the rightmost 4 digits and F+1 contains the leftmost 4 digits.) 0000 0000 to 000186A0 hex (0 Hz to 100 kHz)

ACCELERATION CONTROL: ACC(888)

Use ACC(888) to set the target frequency and acceleration and deceleration rate and output pulses with acceleration and deceleration. (Acceleration rate is the same as the deceleration rate.)

Either independent mode positioning or constant mode speed control is possible when used in combination with PULS(886). ACC(888) can also be executed during pulse output to change the target frequency or acceleration/deceleration rate, enabling smooth (sloped) speed changes.

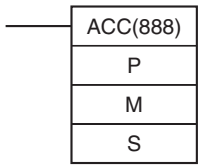

P: Port specifier

M: Output mode

S: First word of settings table

Operand			Contents
P	Port specifier		0000 hex: Pulse output 0 0001 hex: Pulse output 1
M	Output mode	Bits 0 to 3	Mode 0 hex: Continuous 1 hex: Independent
		Bits 4 to 7	Direction 0 hex: CW 1 hex: CCW
		Bits 8 to 11	Pulse output method (See note.) 0 hex: CW/CCW 1 hex: Pulse + direction
		Bits 12 to 15	Not used. (Always 0 hex.)
S	First settings table word	S	Acceleration/deceleration rate: 0001 to FFFF hex (1 to 65,535 Hz) Specify the increase or decrease in the frequency per pulse control period (4 ms).
		S+1 and S+2	S and S+1 contain the target frequency setting, in units of 1 Hz. (S+1 contains the rightmost 4 digits and S+2 contains the leftmost 4 digits.) 0000 0000 to 000186A0 hex (0 Hz to 100 kHz)

PULSE OUTPUT: PLS2(887)

Use PLS2(887) to set the startup frequency, acceleration rate, and deceleration rate, and output a specified number of pulses. Only independent mode positioning is supported.

PLS2(887) can also be executed during pulse output to change the number of output pulses, target frequency, acceleration rate, or deceleration rate.

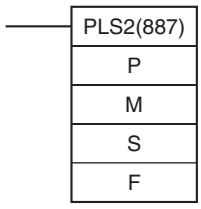

P: Port specifier

M: Output mode

S: First word of settings table

F: First word of starting frequency

Operand		Contents
P	Port specifier	0000 hex: Pulse output 0 0001 hex: Pulse output 1

Operand			Contents
M	Output mode	Bits 0 to 3	Mode 0000 hex: Relative pulse output 0001 hex: Absolute pulse output
		Bits 4 to 7	Direction 0 hex: CW 1 hex: CCW
		Bits 8 to 11	Pulse output method (See note.) 0 hex: CW/CCW 1 hex: Pulse + direction
		Bits 12 to 15	Not used. (Always 0 hex.)
S	First set-tings table word	S	Acceleration rate: 0001 to FFFF hex (1 to 65,535 Hz) Specify the increase or decrease in the frequency per pulse control period (4 ms).
		S+1	Deceleration rate: 0001 to FFFF hex (1 to 65,535 Hz) Specify the increase or decrease in the frequency per pulse control period (4 ms).
		S+2 and S+3	S+2 and S+3 contain the target frequency setting, in units of 1 Hz. (S+2 contains the rightmost 4 digits and S+3 contains the leftmost 4 digits.) 00000001 to 000186A0 hex (0 Hz to 100 kHz)
		S+4 and S+5	S+4 and S+5 contain the number of pulses setting. (S+4 contains the rightmost 4 digits and S+5 contains the leftmost 4 digits.) Relative pulse output: 0000 0000 to 7FFF FFFF hex (0 to 2,147,483,647) Absolute pulse output: 8000 0000 to 7FFF FFFF hex (-2,147,483,648 to 2,147,483,647)
F	First starting frequency word		F and F+1 contain the starting frequency setting, in units of 1 Hz. (F contains the rightmost 4 digits and F+1 contains the leftmost 4 digits.) 0000 0000 to 000186A0 hex (0 Hz to 100 kHz)

ORIGIN SEARCH: ORG(889)

ORG(889) performs an origin search or origin return operation. The required PLC Setup parameters must be set before performing an origin search or origin return operation.

Origin Search

Positions the system to the origin based on the origin proximity input and origin input signals.

Origin Return

Returns the system from its present position to the pre-established origin.

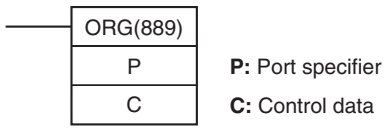

Operand			Contents
P	Port specifier		0000 hex: Pulse output 0 0001 hex: Pulse output 1
C	Con-trol data	Bits 0 to 3	Not used. (Always 0 hex.)
		Bits 4 to 7	Not used. (Always 0 hex.)
		Bits 8 to 11	Pulse output method (See note.) 0 hex: CW/CCW 1 hex: Pulse + direction
		Bits 12 to 15	Mode 0 hex: Origin search 1 hex: Origin return

MODE CONTROL: INI(880)

In addition to the various interrupt and high-speed counter functions, INI(880) can be used to change the pulse output PV or stop the pulse output.

Note This section explains the functions related to pulse outputs only. For details on the INI(880) instruction's high-speed counter or interrupt functions, refer to *6-1 Interrupt Functions* or *5-1 High-speed Counters*.

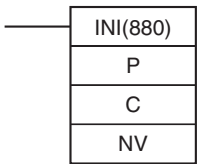

P: Port specifier

C: Control data

NV: First word of new PV

Operand		Contents
P	Port specifier	0000 hex: Pulse output 0 0001 hex: Pulse output 1 1000 hex: PWM output 0 1001 hex: PWM output 1
C	Control data	0002 hex: Change the PV. 0003 hex: Stop pulse output.
NV	First word of new PV	NV and NV+1 contain the new PV when changing the PV. (N contains the rightmost 4 digits and N+1 contains the leftmost 4 digits.) 0000 0000 to FFFFFFFF hex

HIGH-SPEED COUNTER PV READ: PRV(881)

In addition to its interrupt and high-speed counter functions, PRV(881) can be used to read the pulse output PV or pulse output status information.

The status of the following flags is read as status information:

- Pulse Output Status Flag
- PV Underflow/Overflow Flag
- Pulse Output Amount Set Flag
- Pulse Output Completed Flag
- Pulse Output Flag
- No-origin Flag
- At Origin Flag
- Pulse Output Stopped Error Flag

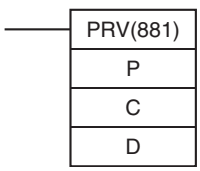

P: Port specifier

C: Control data

D: First destination word

Note This section explains the functions related to pulse outputs only. For details on the PRV(881) instruction's high-speed counter or interrupt functions, refer to *6-1 Interrupt Functions* or *5-1 High-speed Counters*.

Operand			Contents	
P	Port specifier		0000 hex: Pulse output 0 0001 hex: Pulse output 1 1000 hex: PWM output 0 1001 hex: PWM output 1	
C	Control data		0000 hex: Read the PV. 0001 hex: Read the status. 0003 hex: Read the pulse output frequency.	
D	First destination word	Reading PV (D and D+1)	After the pulse output PV is read, the 8-digit hexadecimal data is stored in D and D+1. (D contains the rightmost 4 digits and D+1 contains the leftmost 4 digits.)	
		Reading pulse output status (D)	Bit 0	Pulse Output Status Flag 0: Constant speed 1: Accelerating/decelerating
			Bit 1	PV Underflow/Overflow Flag 0: Normal 1: Error
			Bit 2	Pulse Output Amount Set Flag 0: Not set 1: Set
			Bit 3	Pulse Output Completed Flag 0: Output not completed 1: Output completed
			Bit 4	Pulse Output Flag 0: Stopped 1: Outputting pulses
			Bit 5	No-origin Flag 0: Origin established 1: Origin not established
			Bit 6	At Origin Flag 0: Not stopped at origin 1: Stopped at origin
			Bit 7	Pulse Output Stopped Error Flag 0: No error 1: Pulse output stopped due to error
			Bits 8 to 15	Not used.
		Reading PWM output status (D)	Bit 0	PWM Output Flag 0: Stopped 1: Outputting pulses
			Bits 1 to 15	Not used.

PULSE WITH VARIABLE DUTY FACTOR: PWM(891)

PWM(891) is used to output pulses with the specified duty factor.

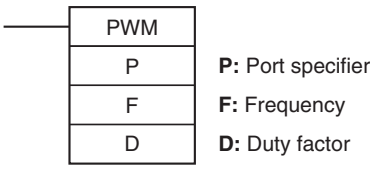

Operand		Contents
P	Port specifier	0000 hex: Pulse output 0 (duty factor set in 1% units, frequency 0.1 Hz units) 0001 hex: Pulse output 1 (duty factor set in 1% units, frequency 0.1 Hz units) 1000 hex: Pulse output 0 (duty factor set in 0.1% units, frequency 0.1 Hz units) 1001 hex: Pulse output 1 (duty factor set in 0.1% units, frequency 0.1 Hz units) 0100 hex: Pulse output 0 (duty factor set in 1% unit, frequency 1 Hz units) 0101 hex: Pulse output 1 (duty factor set in 1% unit, frequency 1 Hz units) 1100 hex: Pulse output 0 (duty factor set in 0.1% unit, frequency 1 Hz units) 1101 hex: Pulse output 1 (duty factor set in 0.1% unit, frequency 1 Hz units)
T	Frequency	0001 to FFFF hex (0.1 to 6553.5 Hz, in 0.1 Hz units) 0001 to 8020 hex (1 to 32,800 Hz, in 1 Hz units)
S	Duty factor	Specify the duty factor of the pulse output, i.e., the percentage of time that the output is ON. 0000 to 03E8 hex: 0.0% to 100.0% (in 0.1 units) 0000 to 0064 hex: 0.0% to 100% (in 1% units)

Combinations of Pulse Control Instructions

The following tables show when a second pulse control instruction can be started if a pulse control operation is already being executed.

Generally, a second independent-mode positioning instruction can be started if an independent-mode positioning instruction is being execute, and a second continuous-mode speed control instruction can be started if a continuous-mode speed control instruction is being executed. Operation cannot be switched between the independent and continuous modes, although PLS2(887) can be started while ACC(888) (continuous mode) is being executed.

It is possible to start another operation during acceleration/deceleration and start another positioning instruction during positioning.

Instruction being executed		Starting instruction (❍: Can be executed., ×: Instruction Error occurs and Error Flag goes ON)						
		INI(880)	SPED(885) (Independent)	SPED(885) (Continuous)	ACC(888) (Independent)	ACC(888) (Continuous)	PLS2(887)	ORG(889)
SPED(885) (Independent)		❍	❍ (note 1)	×	❍ (note 3)	×	×	×
SPED(885) (Continuous)		❍	×	❍ (note 2)	×	❍ (note 5)	×	×
ACC(888) (Independent)	Steady speed	❍	×	×	❍ (note 4)	×	❍ (note 6)	×
	Accelerating or decelerating	❍	×	×	❍ (note 4)	×	❍ (note 6)	×
ACC(888) (Continuous)	Steady speed	❍	×	×	×	❍ (note 5)	❍ (note 7)	×
	Accelerating or decelerating	❍	×	×	×	❍ (note 5)	❍ (note 7)	×
PLS2(887)	Steady speed	❍	×	×	❍ (note 4)	×	❍ (note 8)	×
	Accelerating or decelerating	❍	×	×	❍ (note 4)	×	❍ (note 8)	×
ORG(889)	Steady speed	❍	×	×	×	×	×	×
	Accelerating or decelerating	❍	×	×	×	×	×	×
PWM		❍	×	×	×	×	×	×

Note (1) SPED(885) (Independent) to SPED(885) (Independent)

- The number of pulses cannot be changed.
- The frequency can be changed.
- The output mode and direction cannot be switched.

(2) SPED(885) (Continuous) to SPED(885) (Continuous)

- The frequency can be changed.
- The output mode and direction cannot be switched.

(3) SPED(885) (Independent) to ACC(888) (Independent)

- The number of pulses cannot be changed.
- The frequency can be changed.
- The acceleration/deceleration rate can be changed.
- The output mode and direction cannot be switched.

(4) ACC(888) (Independent) to ACC(888) (Independent)
or PLS2(887) to ACC(888) (Independent)

- The number of pulses cannot be changed.
- The frequency can be changed.
- The acceleration/deceleration rate can be changed. (The rate can even be changed during acceleration or deceleration.)
- The output mode and direction cannot be switched.

(5) SPED(885) (Continuous) to ACC(888) (Continuous)
or ACC(888) (Continuous) to ACC(888) (Continuous)

- The frequency can be changed. (The target frequency can even be changed during acceleration or deceleration.)
- The acceleration/deceleration rate can be changed. (The rate can even be changed during acceleration or deceleration.)
- The output mode and direction cannot be switched.

(6) ACC(888) (Independent) to PLS2(887)

- The number of pulses can be changed. (The setting can even be changed during acceleration or deceleration.)
- The frequency can be changed. (The target frequency can even be changed during acceleration or deceleration.)
- The acceleration/deceleration rate can be changed. (The rate can even be changed during acceleration or deceleration.)
- The output mode and direction cannot be switched.

(7) ACC(888) (Continuous) to PLS2(887)

- The frequency can be changed. (The target frequency can even be changed during acceleration or deceleration.)
- The acceleration/deceleration rate can be changed. (The rate can even be changed during acceleration or deceleration.)
- The output mode and direction cannot be switched.

(8) PLS2(887) to PLS2(887)

- The number of pulses can be changed. (The setting can even be changed during acceleration or deceleration.)
- The frequency can be changed. (The target frequency can even be changed during acceleration or deceleration.)
- The acceleration/deceleration rate can be changed. (The rate can even be changed during acceleration or deceleration.)
- The output mode and direction cannot be switched.

5-2-9 Variable Duty Factor Pulse Outputs (PWM(891) Outputs)

Overview

PWM (Pulse Width Modulation) pulse outputs can be output with a specified duty factor. The duty factor is the ratio of the pulse's ON time and OFF time in one pulse cycle. Use the PWM(891) instruction to generate variable duty factor pulses from a built-in output.

The duty factor can be changed while pulses are being output.

Bit Allocations

Word	Bit	Function
CIO 100	01	PWM output 0
	03	PWM output 1

Procedure

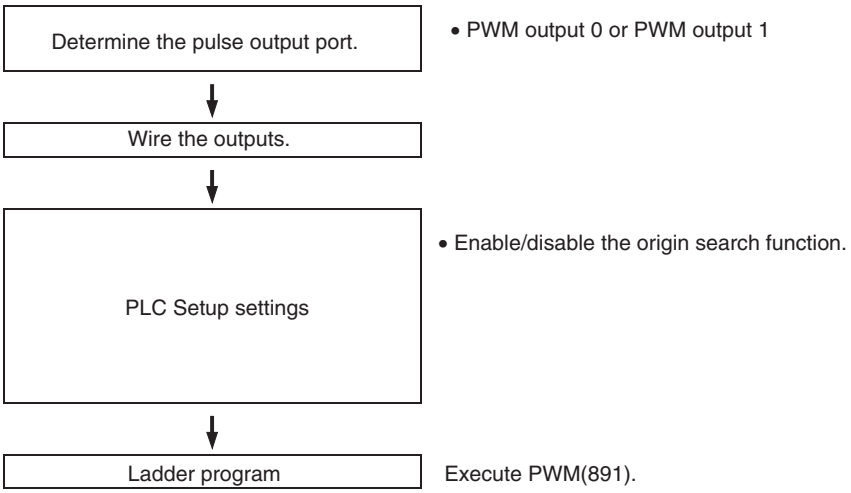

Specifications

Item	Specifications
Duty factor	0.0% to 100.0% in 0.1% increments (Duty factor accuracy is +1%/–0% at10 kHz, +5%/–0% at 10 to 32.8 kHz .)
Frequency	0.1 Hz to 6,553.5 Hz Set in 0.1 Hz units. (See note.)
Output mode	Continuous mode
Instruction	PWM(891)

Note The frequency can be set up to 6553.5 Hz in the PWM(891) instruction, but the duty factor accuracy declines significantly at high frequencies because of limitations in the output circuit at high frequencies.

5-2-10 Example Pulse Output Applications

Outputting Pulses after a Preset Delay

This example program waits for a preset time (0.5 ms) after the interrupt input (CIO 0.04) goes ON and then outputs 100,000 pulses at 100 kHz from pulse output 0.

Input interrupt task 0 (interrupt task number 140) starts a scheduled interrupt with a scheduled time of 0.5 ms. The scheduled interrupt task executes the pulse output instructions and stops the scheduled interrupt.

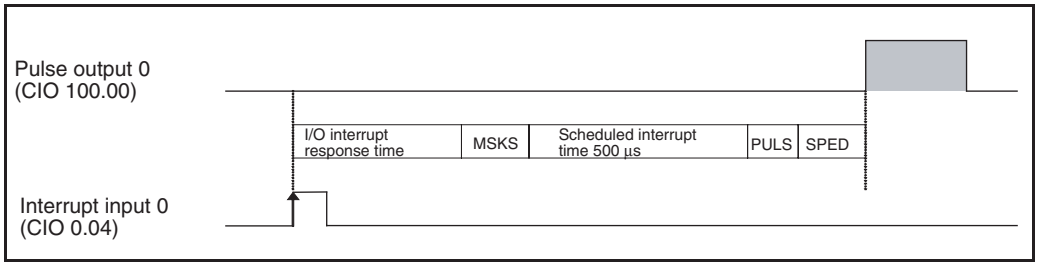

Instructions Used

MSKS(690)	Enables the I/O interrupt. Starts the scheduled interrupt.
PULS(886)	Sets the number of output pulses.
SPED(885)	Starts the pulse output.

Preparation

■ PLC Setup

Built-in Input Settings

PLC Setup setting details
Use built-in input 0.04 as the interrupt input.

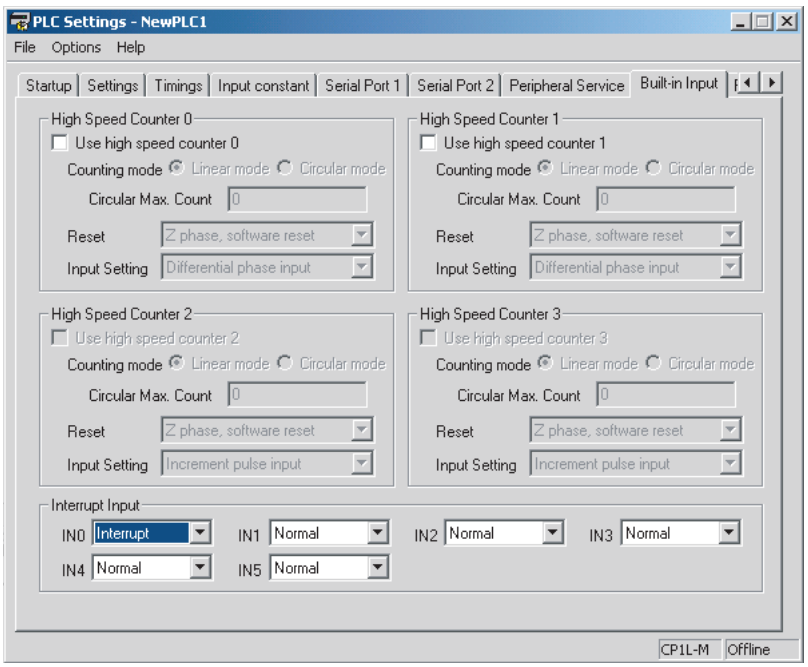

Pulse Output 0 Settings

PLC Setup setting details
Do not use high-speed counter 0.
Do not use the pulse output 0 origin search function.

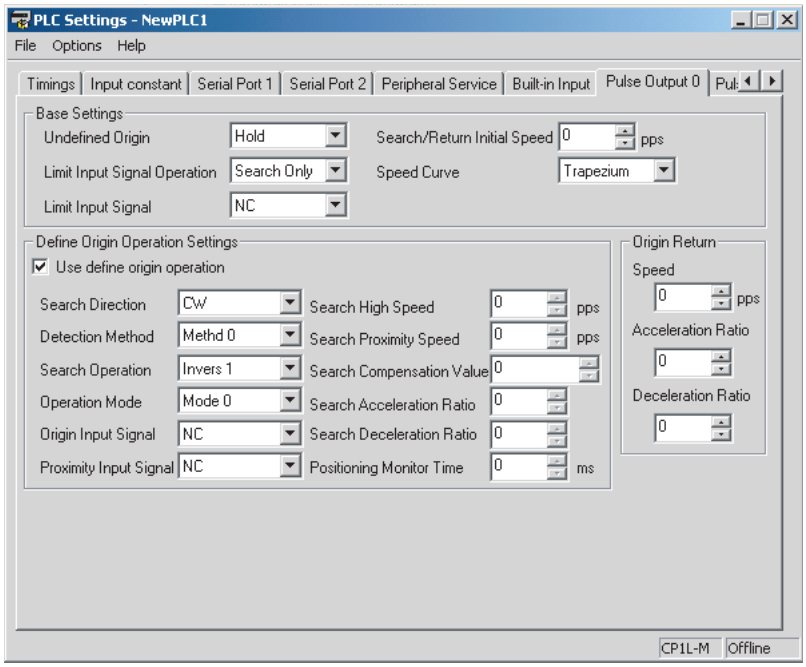

Scheduled Interrupt Time Unit Setting

PLC Setup setting details	Data
Set the scheduled interrupt time units to 0.1 ms.	0002 hex

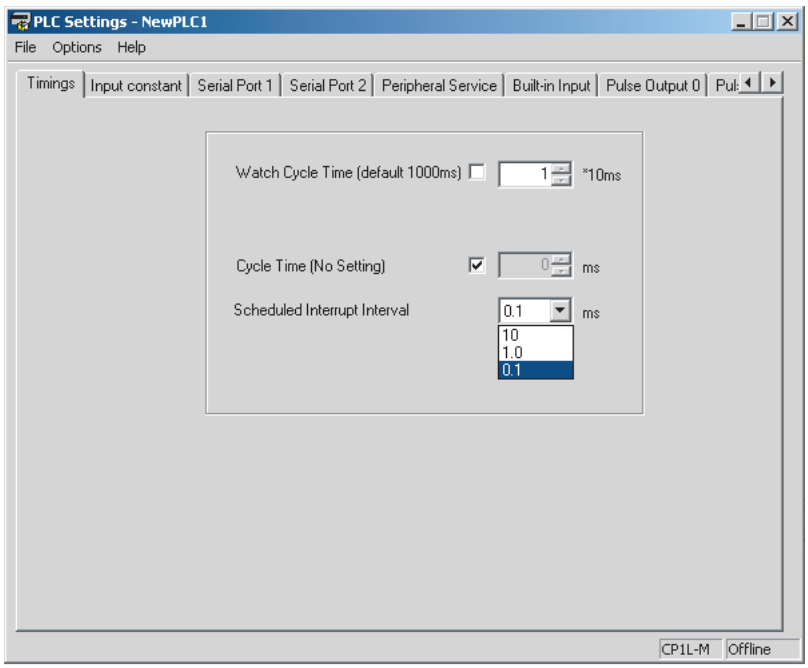

Ladder Program

Cyclic Task (Task 0)

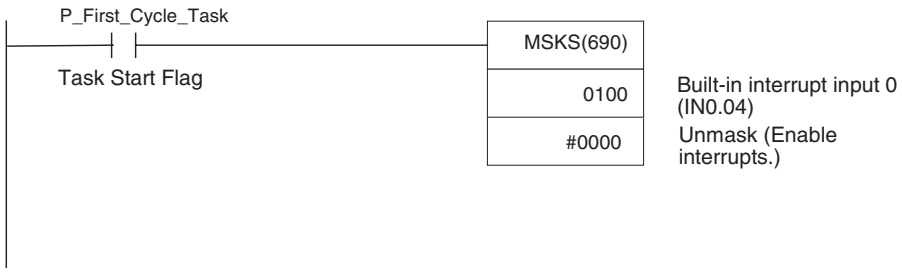

Built-in Input 0 Interrupt Task (Interrupt Task 140)

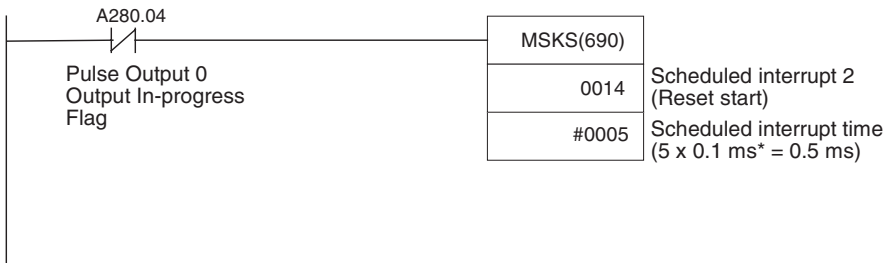

* Select 0.1 ms for the setting units in the PLC Setup.

Scheduled Interrupt Task 0 (Interrupt Task 2)

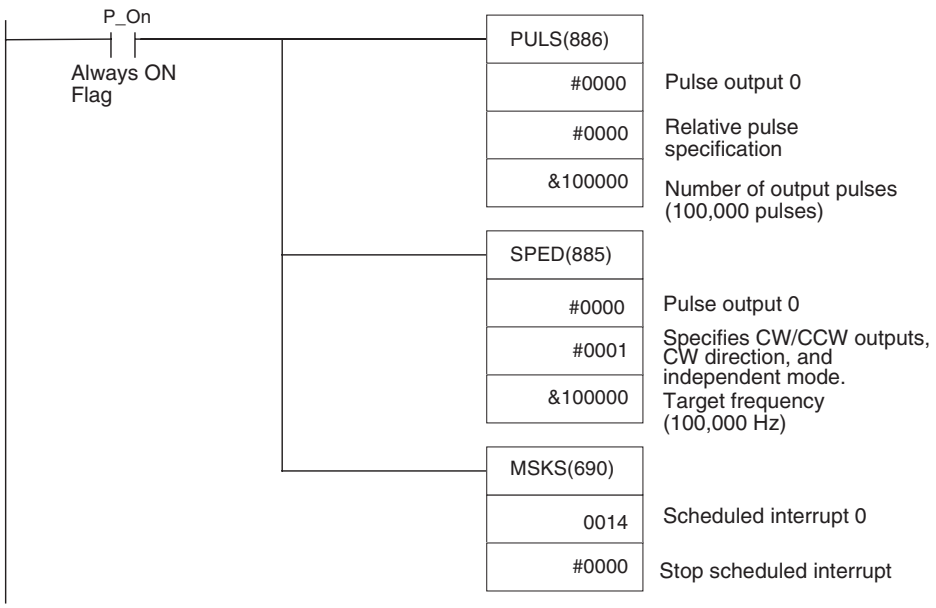

Positioning (Trapezoidal Control)

Specifications and Operation

When the start input (0.00) goes ON, this example program outputs 600,000 pulses from pulse output 0 and turns the motor.

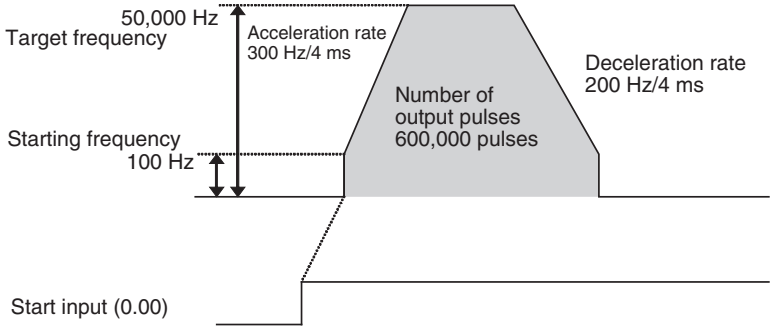

Instructions Used

PLS2(887)

Preparation

■ **PLC Setup**

There are no settings that need to be made in the PLC Setup.

DM Area Settings

PLS2(887) Settings (D00000 to D00007)

Setting details	Address	Data
Acceleration rate: 300 Hz/4 ms	D0	012C
Deceleration rate: 200 Hz/4 ms	D1	00C8
Target frequency: 50,000 Hz	D2	C350
	D3	0000
Number of output pulses: 600,000 pulses	D4	27C0
	D5	0009
Starting frequency: 100 Hz	D6	0064
	D7	0000

Ladder Program

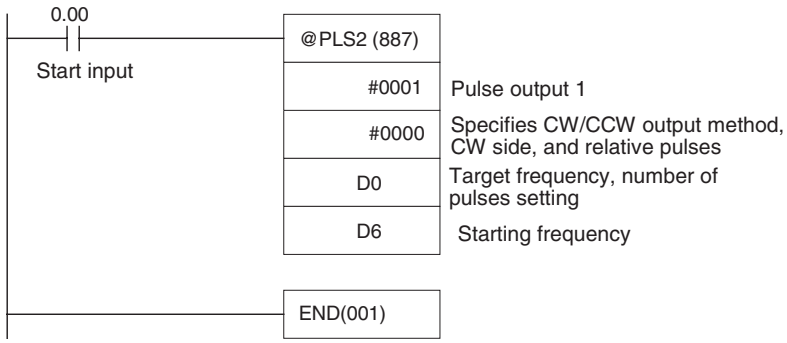

Remarks

- Absolute pulses can be specified when the origin position has been determined.
- If a target frequency that cannot be reached has been set, the target frequency will be reduced automatically, i.e., triangular control will be performed. In some cases where the acceleration rate is substantially greater than the deceleration rate, the operation won't be true triangular control. The motor will be operated at a constant speed for a short time between the acceleration and deceleration.

Jog Operation

Specifications and Operation

- Low-speed jog operation (CW) will be executed from pulse output 1 while input 0.00 is ON.
- Low-speed jog operation (CCW) will be executed from pulse output 1 while input 0.01 is ON.

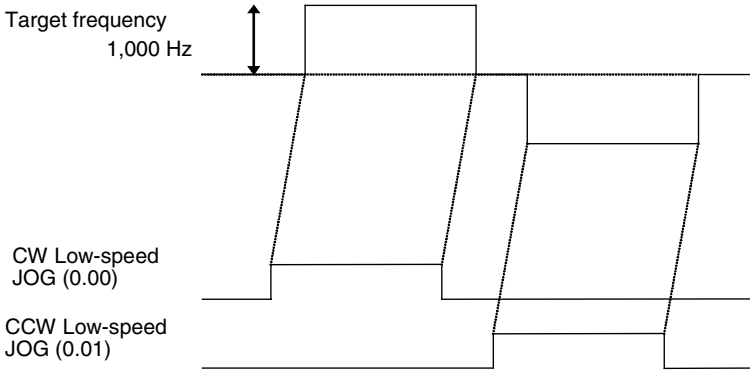

- High-speed job operation (CW) will be executed from pulse output 1 while input 0.04 is ON.
- High-speed jog operation (CCW) will be executed from pulse output 1 while input 0.05 is ON.

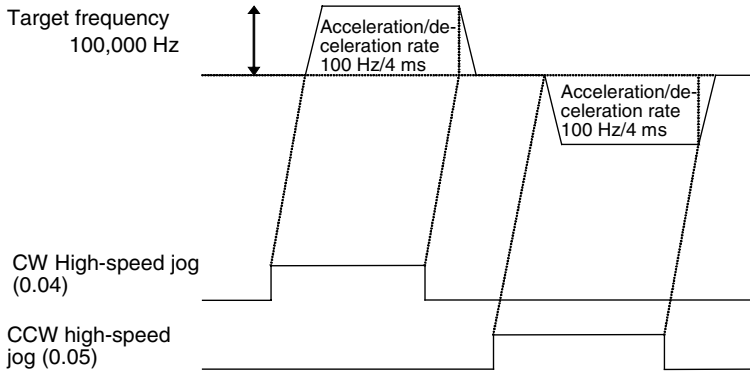

Instructions Used

SPED(885) Starts and stops (immediate stop) the low-speed jog operations.

ACC(888) Starts and stops (decelerate to a stop) the high-speed jog operations.

Preparation

■ **PLC Setup**

There are no settings that need to be made in the PLC Setup.

DM Area Settings

Settings to Control Speed while Jogging (D0 to D1 and D10 to D15)

Setting details	Address	Data
Target frequency (low speed): 1,000 Hz	D0	03E8
	D1	0000
Acceleration rate: 100 Hz/4 ms	D10	0064

Setting details	Address	Data
Target frequency (high speed): 100,000 Hz	D011	86A0
	D12	0001
Deceleration rate: 100 Hz/4 ms (Not used.)	D13	0064
Target frequency (stop): 0 Hz	D14	0000
	D15	0000

Ladder Program

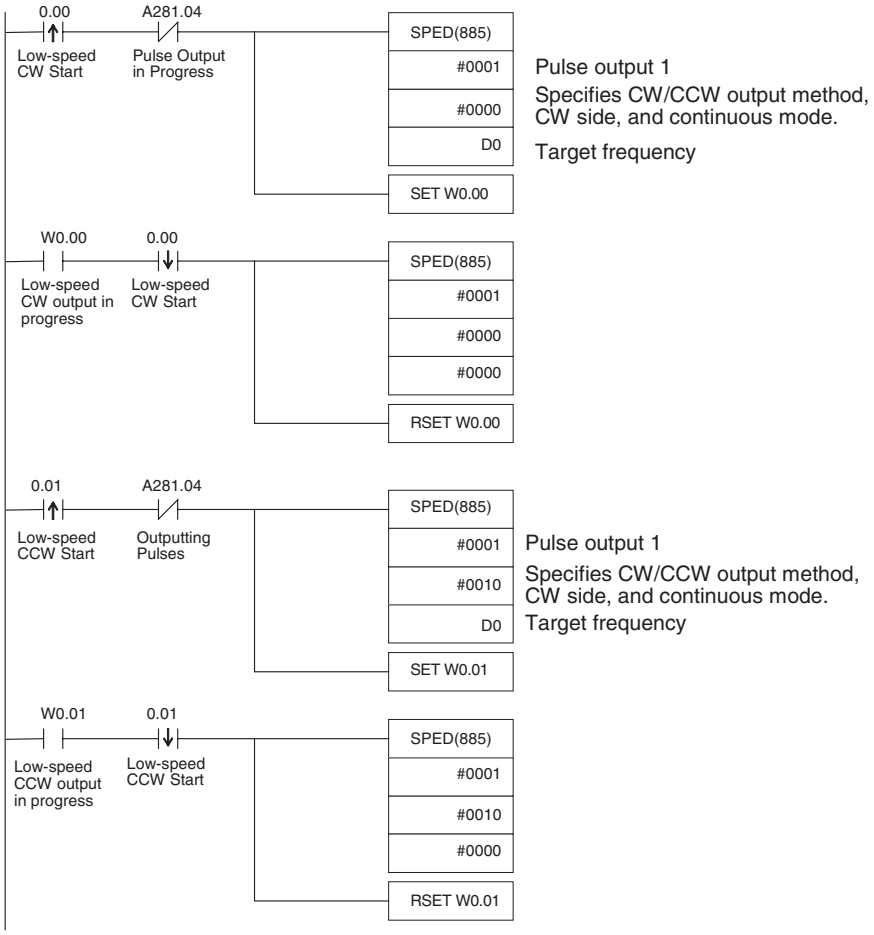

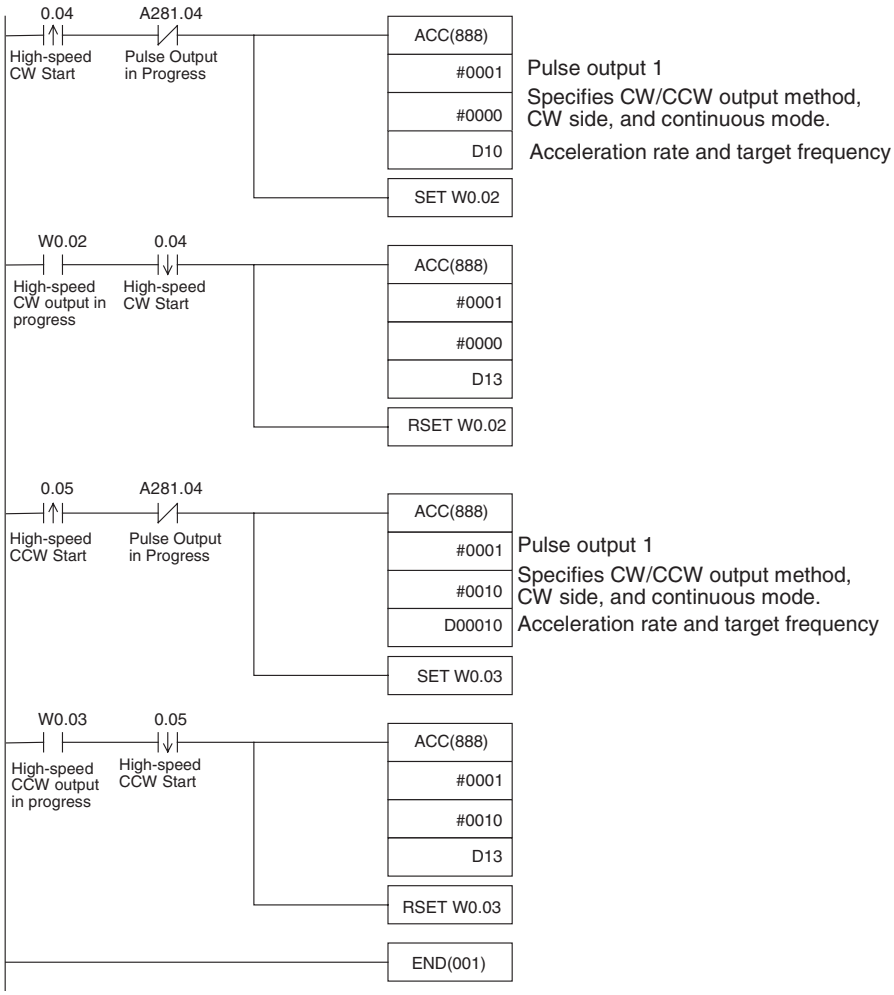

Remarks PLS2(887) can be used to set a starting frequency or unequal acceleration and deceleration rates, but there are limitations on the operating range because the end point must be specified in PLS2(887).

Cutting Long Material Using Fixed Feeding

Specifications and Operation

■ **Outline**

In this example, first jogging is used to position the material and then fixed-distance positioning is used to feed the material.

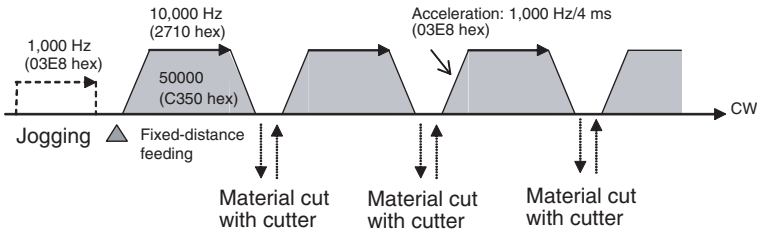

■ **System Configuration**

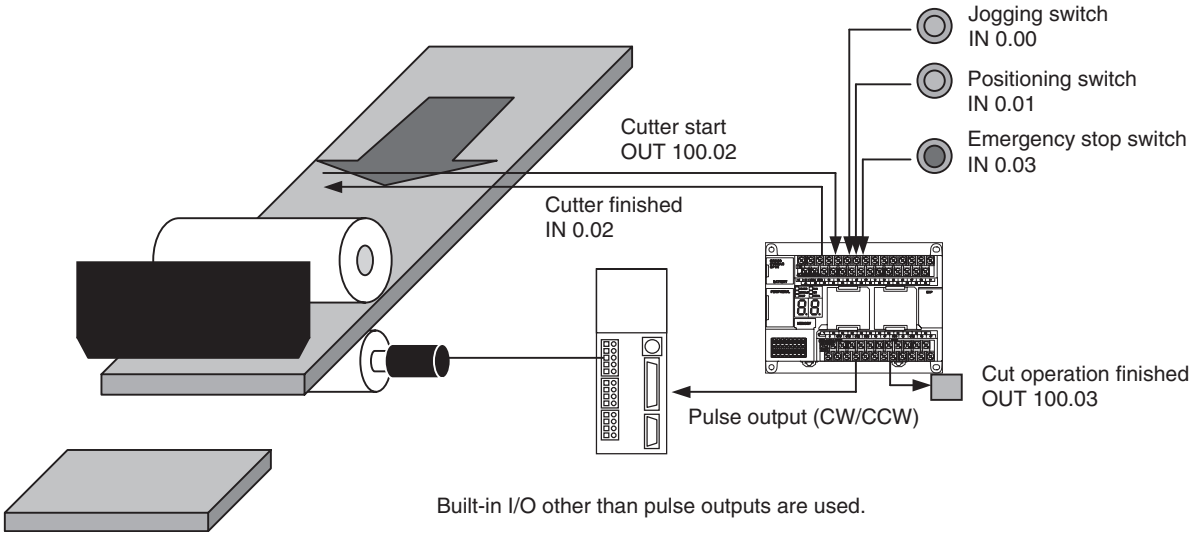

Built-in I/O other than pulse outputs are used.

■ **Operation**

1,2,3...

1. The workpiece is set at the starting position using the Jogging Switch Input (IN 0.00).
2. The workpiece is feed the specified distance (relative) using the Positioning Switch Input (IN 0.01).
3. When feeding has been completed, the cutter is activated using the Cutter Start Output (OUT 100.02).
4. Feeding is started again when the Cutter Finished Input (IN 0.02) turns ON.
5. The feeding/cutting operation is repeated for the number of times specified for the counter (C0, 100 times).
6. When the operation has been completed, the Cutting Operation Finished Output (OUT 100.03). is turned ON.

The feeding operation can be canceled and operation stopped at any point using the Emergency Switch Input (IN 0.03).

Instructions Used

SPED(885)

PLS2(887)

Preparation

■ **PLC Setup**

There are no settings that need to be made in the PLC Setup.

■ **DM Area Settings**

Speed Settings for Jogging (D0 to D3)

Setting details	Address	Data
Target frequency: 1,000 Hz	D0	03E8
	D1	0000
Target frequency: 0 Hz	D2	0000
	D3	0000

Settings for PLS2(887) for Fixed-distance Feeding (D10 to D20)

Setting details	Address	Data
Acceleration rate: 1,000 Hz/4 ms	D10	03E8
Deceleration rate: 1,000 Hz/4 ms	D11	03E8
Target frequency: 10,000 Hz	D12	2710
	D13	0000
Number of output pulses: 50,000 pulses	D14	C350
	D15	0000
Starting frequency: 0000 Hz	D16	0000
	D17	0000
Counter setting: 100 times	D20	0100

Ladder Program

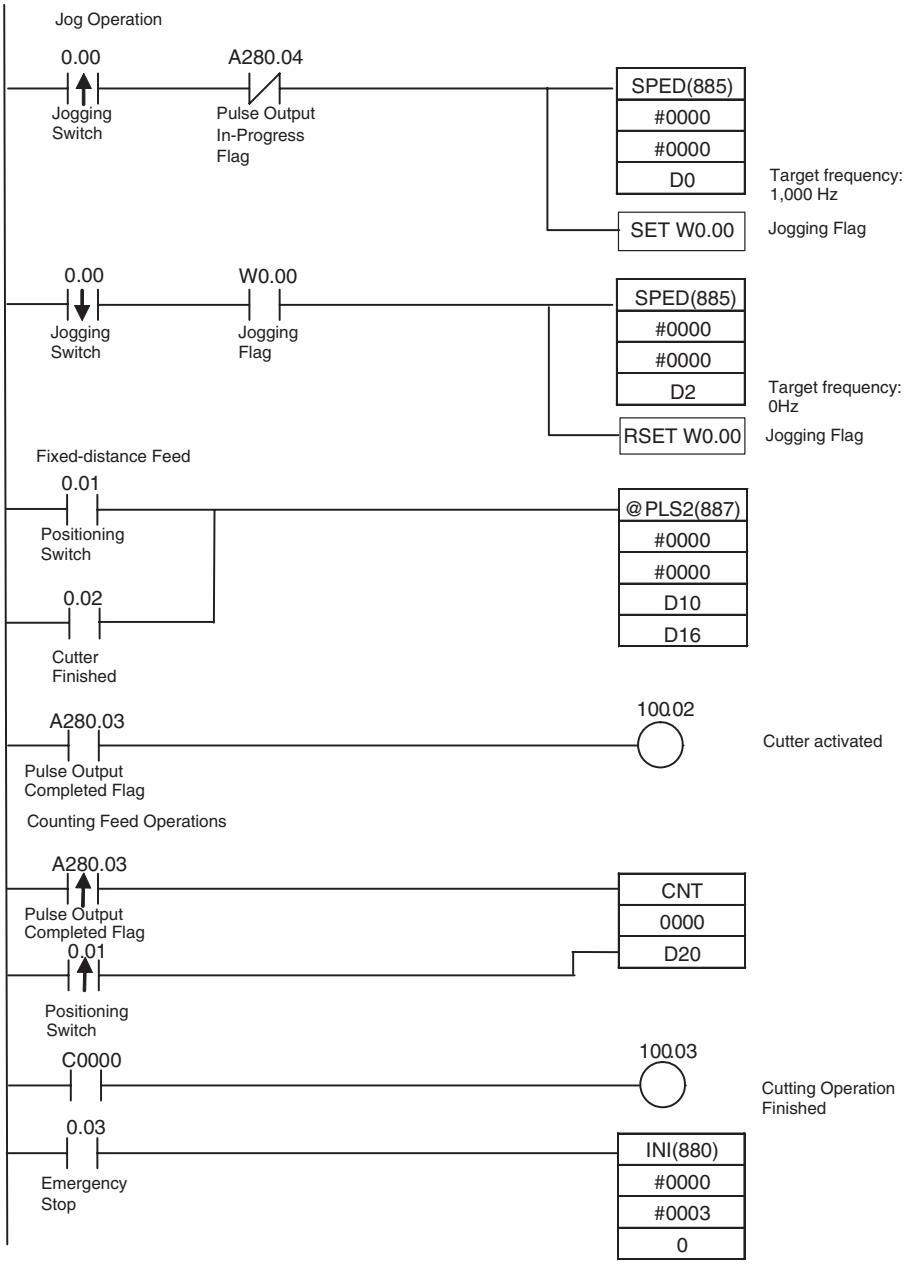

Remarks

1,2,3... 1. PLS22(887) used a relative pulse setting. This enables operation even if the origin is not defined. The present position in A276 (lower 4 digits) and A277 (upper 4 digits) is set to 0 before pulse output and then contains the specified number of pulses.

2. ACC(888) can be used instead of SPED(885) for the jog operation. If ACC(888) is used, acceleration/deceleration can be included in the jog operation.

Vertically Conveying PCBs (Multiple Progressive Positioning)

Specifications and Operation

■ Outline

1,2,3... 1. PCBs with components mounted are stored in a stocker.

2. When a stocker becomes full, it is moved to the conveyance point.

Positioning Operation for Vertical Conveyor

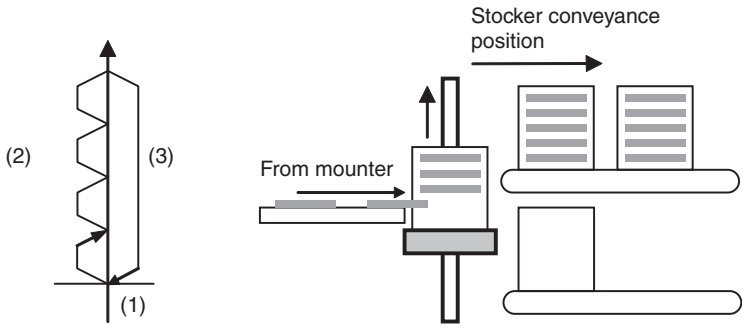

■ Operation Pattern

1,2,3... 1. An origin search is performed.

2. Fixed-distance positioning is repeated.

3. The system is returned to the original position.

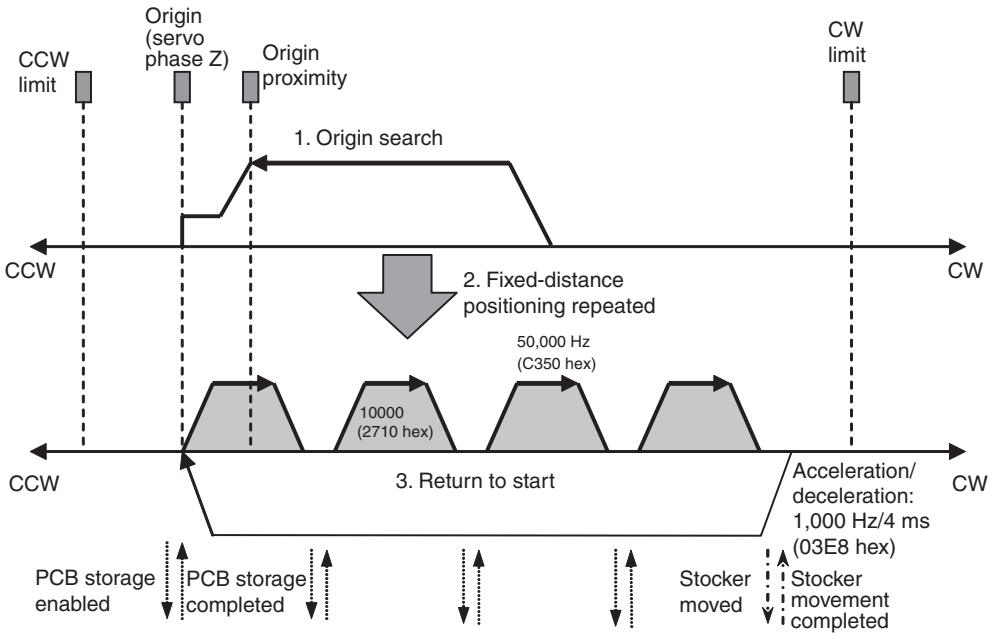

Wiring Example Using SmartStep A-series Servo Driver

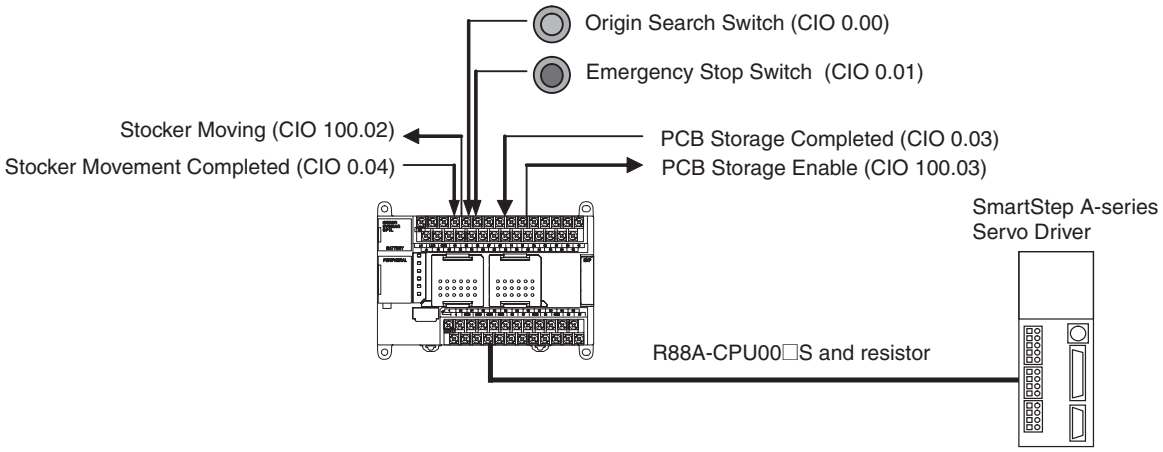

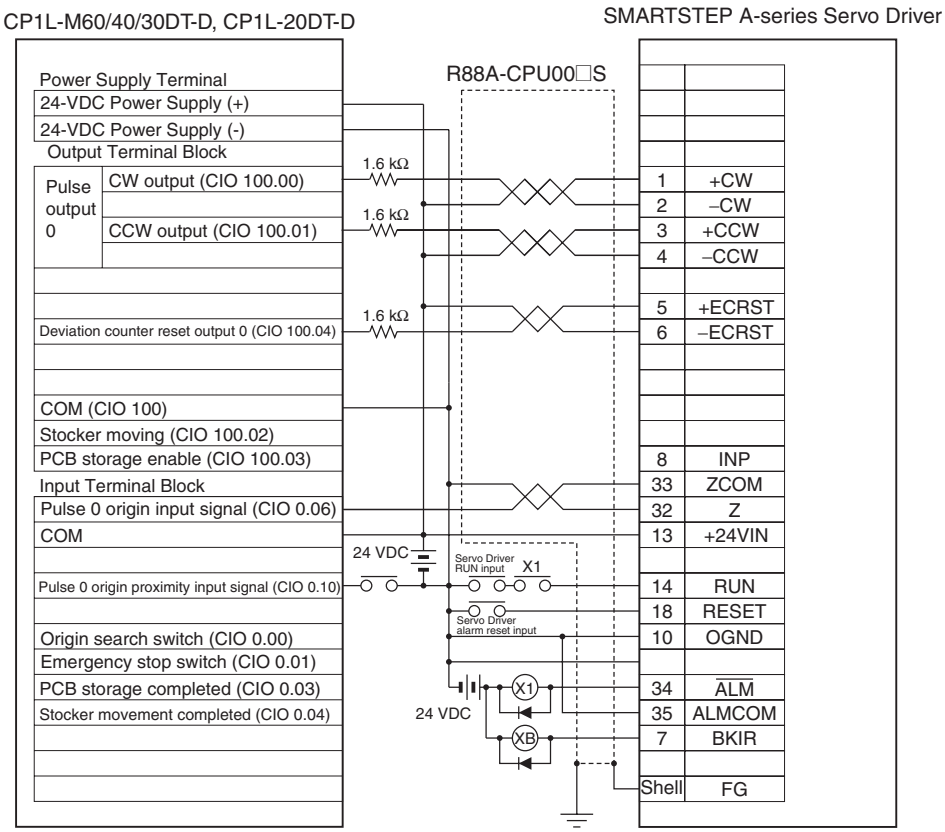

Operation

1,2,3...

1. An origin search is performed using the Origin Search Switch (CIO 0.00).
2. When the origin search is finished, the PCB Storage Enabled Output (CIO 100.03) is turned ON.
3. When a PCB has been stored, the stocker is raised (relative positioning) using the PCB Storage Completed Input (CIO 0.03).
4. Storing PCBs is repeated until the stocker is full.
5. The number of PCBs in the stocker is counted with counter C0 by counting the number of times the stocker is raised.

6. When the stocker is full, it is moved (CIO 100.02) and only the conveyor is lowered (absolute positioning) when stoker movement is completed (CIO 0.04).

The operation can be canceled and pulse output stopped at any point using the Emergency Switch Input (CIO 0.01).

Preparation

■ PLC Setup

Setting details
Enable origin search function for pulse output 0.

Note The origin search enable setting is read when the power supply is turned ON.

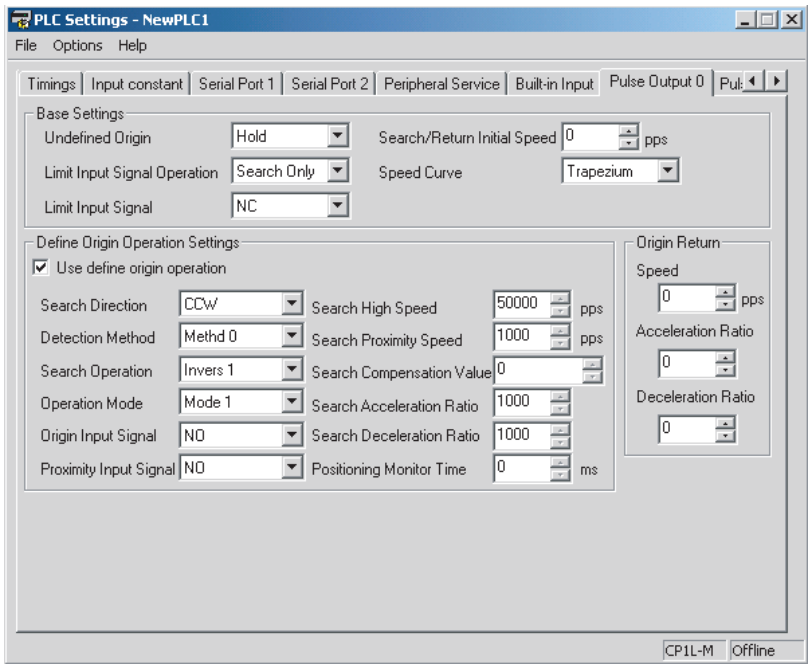

DM Area Settings

Settings for PLS2(887) for Fixed-distance Positioning (D0 to D7)

Setting details	Address	Data
Acceleration rate: 1,000 Hz/4 ms	D0	03E8
Deceleration rate: 1,000 Hz/4 ms	D1	03E8
Target frequency: 50,000 Hz	D2	C350
	D3	0000
Number of output pulses: 10,000 pulses	D4	2710
	D5	0000
Starting frequency: 0 Hz	D6	0000
	D7	0000

Settings for PLS2(887) to Return to Start (D10 to D17)

Setting details	Address	Data
Acceleration rate: 300 Hz/4 ms	D10	012C
Deceleration rate: 200 Hz/4 ms	D11	00C8
Target frequency: 50,000 Hz	D12	C350
	D13	0000

Setting details	Address	Data
Number of output pulses: 10,000 × 15 pulses	D14	49F0
	D15	0002
Starting frequency: 100 Hz	D16	0000
	D17	0000

Number of Repeats of Fixed-distance Positioning Operation (D20)

Setting details	Address	Data
Number of repeats of fixed-distance positioning operation (number of PCBs in stocker)	D20	0015

Ladder Program

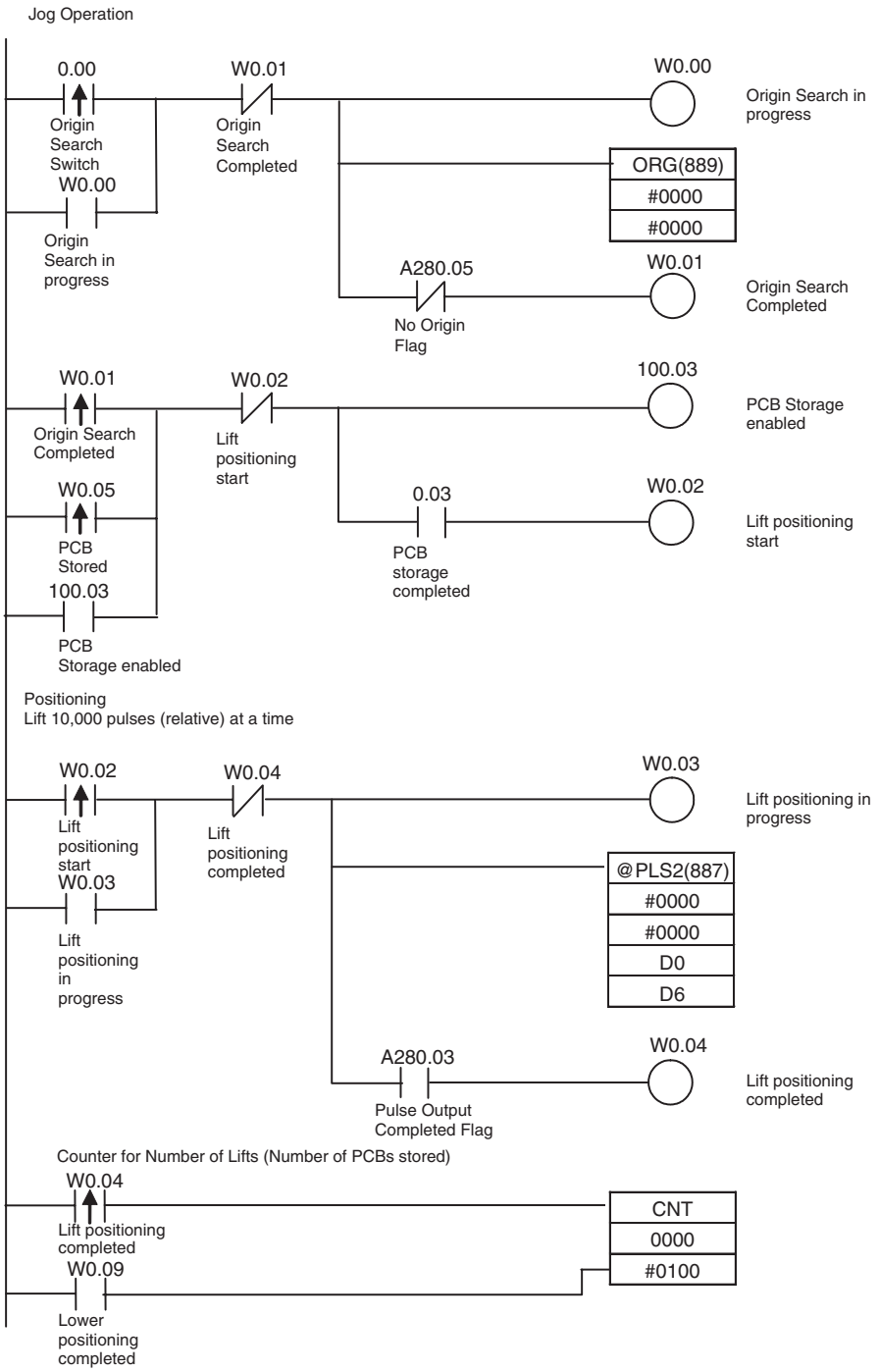

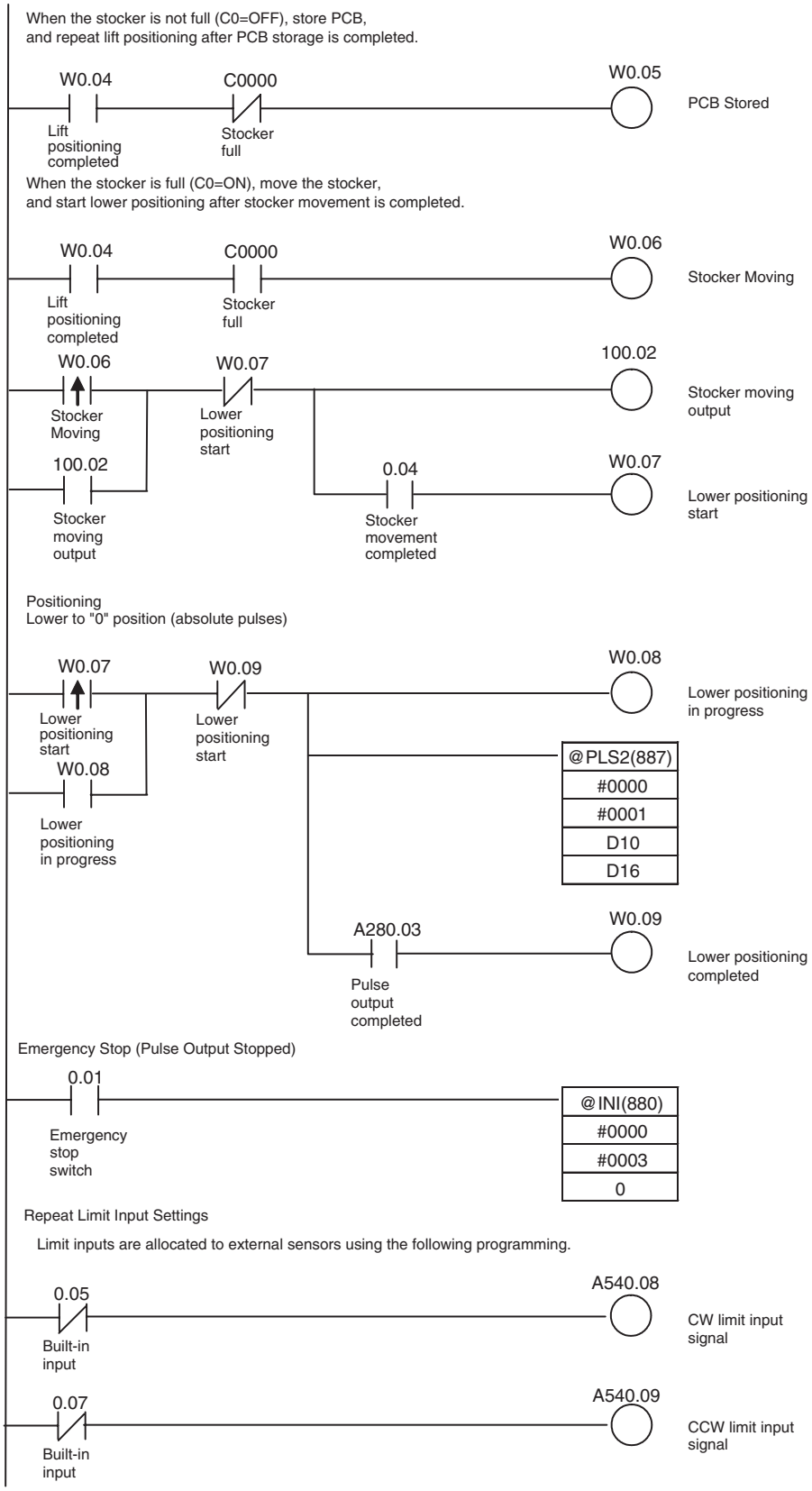
When the stocker is not full (C0=OFF), store PCB,
and repeat lift positioning after PCB storage is completed.
W0.04
Lift positioning completed
C0000
Stocker full
W0.05
PCB Stored
When the stocker is full (C0=ON), move the stocker,
and start lower positioning after stocker movement is completed.
W0.04
Lift positioning completed
C0000
Stocker full
W0.06
Stocker Moving
W0.06
Stocker Moving
W0.07
Lower positioning start
100.02
Stocker moving output
100.02
Stocker moving output
0.04
Stocker movement completed
W0.07
Lower positioning start
Positioning
Lower to "0" position (absolute pulses)
W0.07
Lower positioning start
W0.09
Lower positioning start
W0.08
Lower positioning in progress
W0.08
Lower positioning in progress
@PLS2(887)
#0000
#0001
D10
D16
A280.03
Pulse output completed
W0.09
Lower positioning completed
Emergency Stop (Pulse Output Stopped)
0.01
Emergency stop switch
@INI(880)
#0000
#0003
0
Repeat Limit Input Settings
Limit inputs are allocated to external sensors using the following programming.
0.05
Built-in input
A540.08
CW limit input signal
0.07
Built-in input
A540.09
CCW limit input signal

Palletize: Two-axis Multipoint Positioning

Specifications and Operation

■ **Outline**

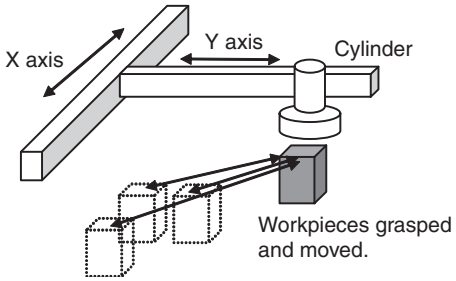

■ **Operation Pattern**

1,2,3...

1. An origin search is performed.
2. A workpiece is grasped and moved to position A.
3. The workpiece is grasped at one position and moved back and forth to several assembly positions.

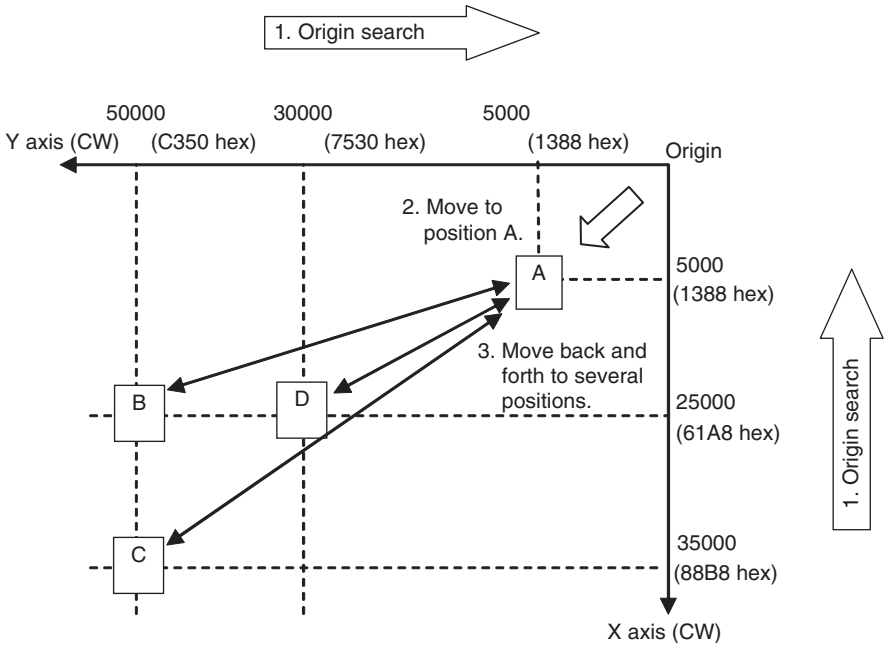

Note The X and Y axes are moved independently, i.e., interpolation is not performed.

Wiring Example Using SmartStep A-series Servo Driver

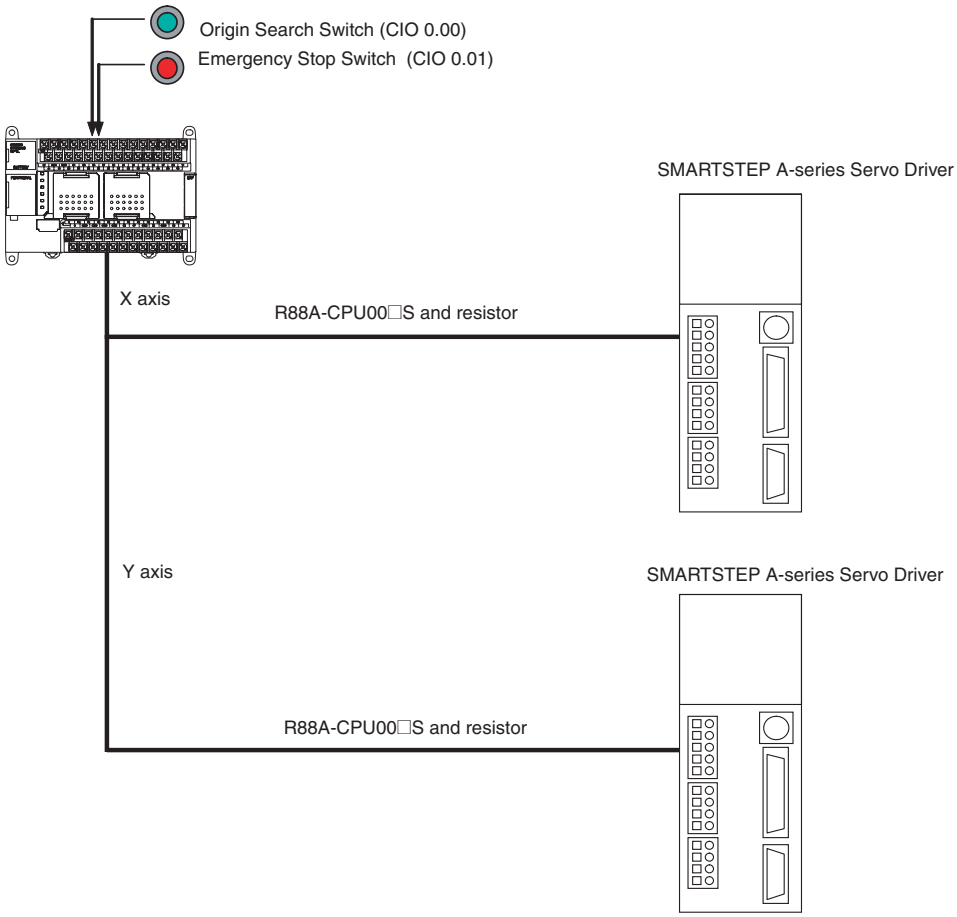

X Axis

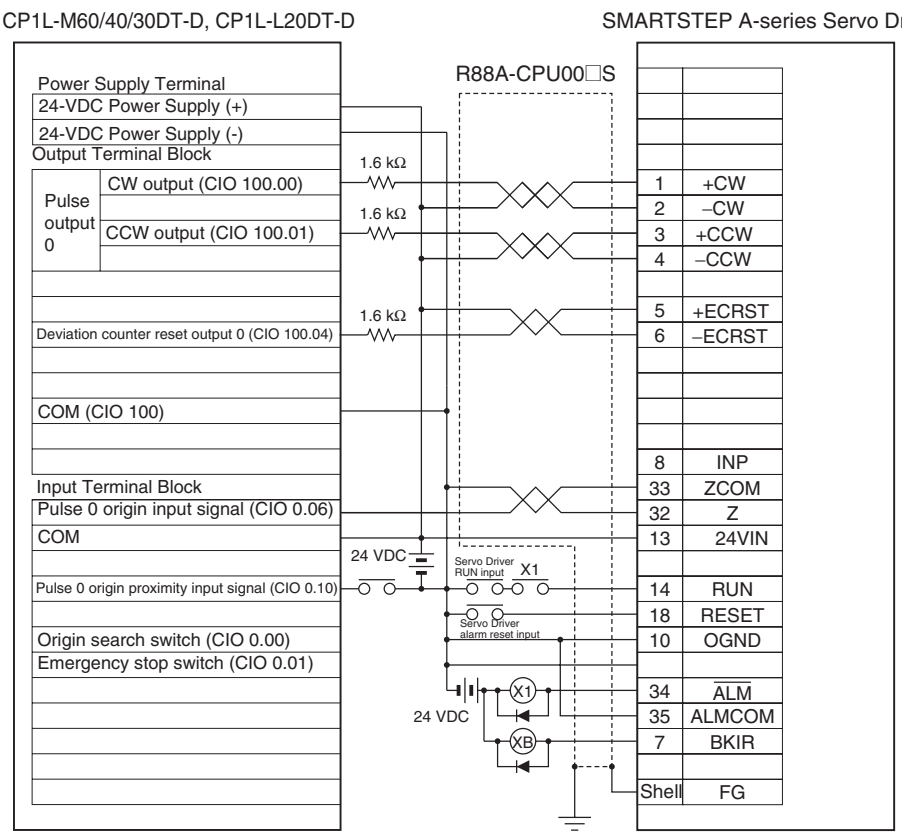
CP1L-M60/40/30DT-D, CP1L-L20DT-D
SMARTSTEP A-series Servo Driver
R88A-CPU00□S
Power Supply Terminal
24-VDC Power Supply (+)
24-VDC Power Supply (-)
Output Terminal Block
Pulse output 0
CW output (CIO 100.00)
CCW output (CIO 100.01)
Deviation counter reset output 0 (CIO 100.04)
COM (CIO 100)
Input Terminal Block
Pulse 0 origin input signal (CIO 0.06)
COM
Pulse 0 origin proximity input signal (CIO 0.10)
Origin search switch (CIO 0.00)
Emergency stop switch (CIO 0.01)
1.6 kΩ
24 VDC
Servo Driver RUN input
X1
Servo Driver alarm reset input
XB
1 +CW
2 –CW
3 +CCW
4 –CCW
5 +ECRST
6 –ECRST
8 INP
33 ZCOM
32 Z
13 24VIN
14 RUN
18 RESET
10 OGND
34 ALM
35 ALMCOM
7 BKIR
Shell FG

Y Axis

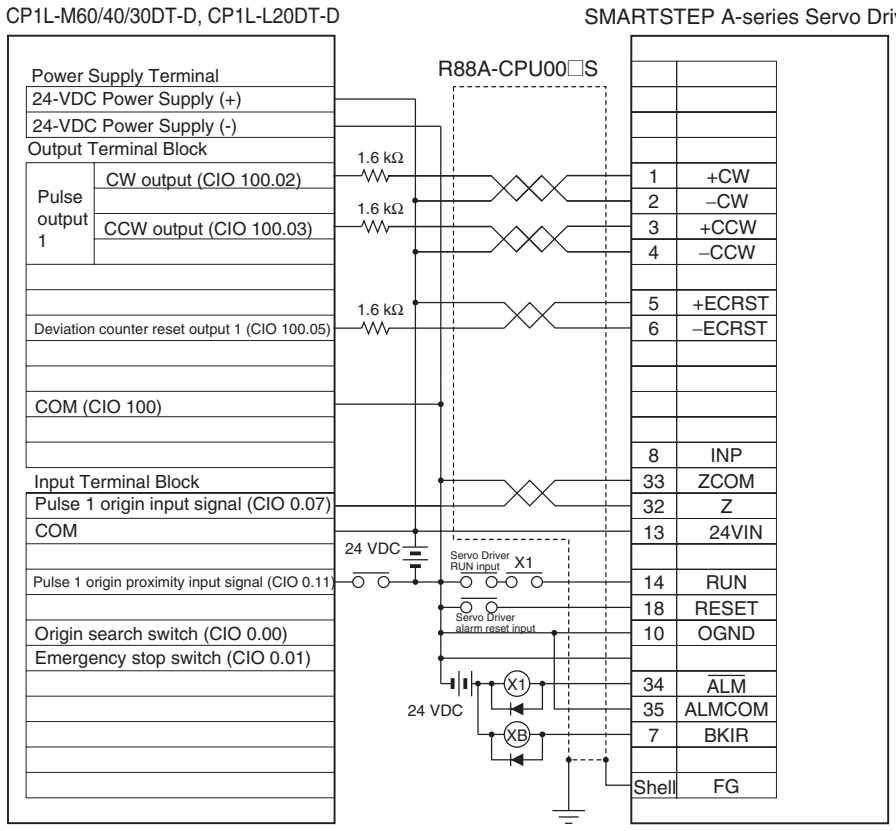
CP1L-M60/40/30DT-D, CP1L-L20DT-D
SMARTSTEP A-series Servo Driver
R88A-CPU00□S
Power Supply Terminal
24-VDC Power Supply (+)
24-VDC Power Supply (-)
Output Terminal Block
Pulse output 1
CW output (CIO 100.02)
CCW output (CIO 100.03)
Deviation counter reset output 1 (CIO 100.05)
COM (CIO 100)
Input Terminal Block
Pulse 1 origin input signal (CIO 0.07)
COM
Pulse 1 origin proximity input signal (CIO 0.11)
Origin search switch (CIO 0.00)
Emergency stop switch (CIO 0.01)
1.6 kΩ
24 VDC
Servo Driver RUN input
X1
Servo Driver alarm reset input
XB
1 +CW
2 –CW
3 +CCW
4 –CCW
5 +ECRST
6 –ECRST
8 INP
33 ZCOM
32 Z
13 24VIN
14 RUN
18 RESET
10 OGND
34 ALM
35 ALMCOM
7 BKIR
Shell FG

Operation

1,2,3...

1. An origin search is performed using the Origin Search Switch (CIO 0.00).
2. When the origin search is finished, the following operations are performed continuously.
   Move to A.
   Move to B and return to A.
   Move to C and return to A.
   Move to D and return to A.
3. An emergency stop can be performed using the Emergency Stop Input (CIO 0.01)

Preparation

■ **PLC Setup**

Setting details
Enable origin search function for pulse output 0 and 1.

Note The origin search enable setting is read when the power supply is turned ON.

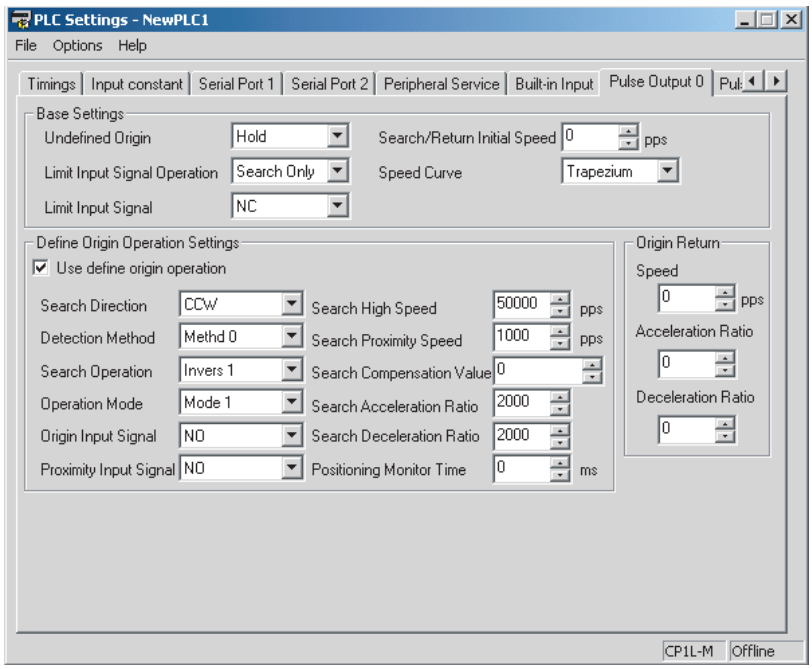

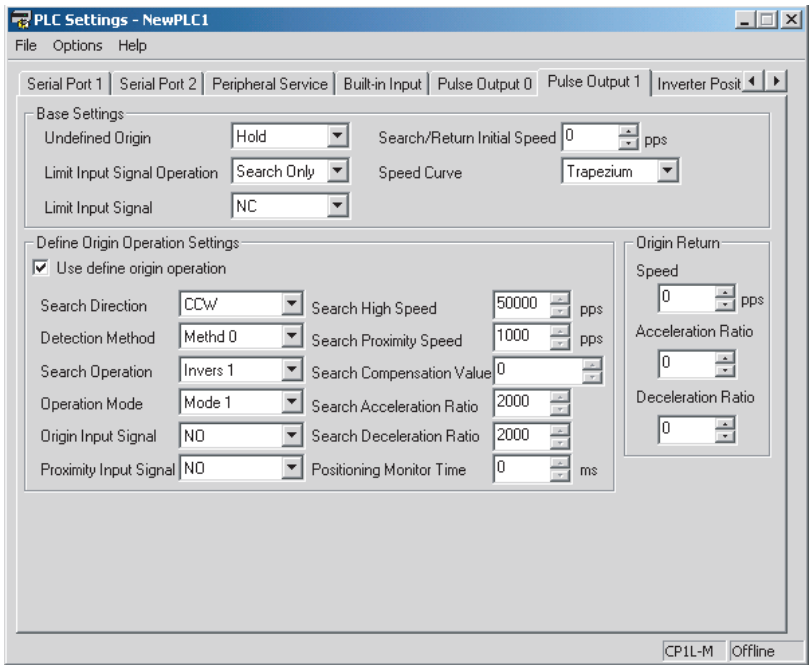

■ DM Area Settings

Starting Frequency

Setting details	Address	Data
X-axis starting frequency	D0	0000
Y-axis starting frequency	D2	0000

PLS2(887) Settings to Move from Origin to Position A

Setting details		Address	Data
X axis	Acceleration rate: 2,000 Hz/4 ms	D10	07D0
	Deceleration rate: 2,000 Hz/4 ms	D11	07D0
	Target frequency: 100,000 Hz	D12	86A0
		D13	0001
	Number of output pulses: 5,000 pulses	D14	1388
		D15	0000
Y axis	Acceleration rate: 2,000 Hz/4 ms	D20	07D0
	Deceleration rate: 2,000 Hz/4 ms	D21	07D0
	Target frequency: 100,000 Hz	D22	86A0
		D23	0001
	Number of output pulses: 5,000 pulses	D24	1388
		D25	0000

PLS2(887) Settings to Move from Position A to Position B

Setting details		Address	Data
X axis	Acceleration rate: 2,000 Hz/4 ms	D30	07D0
	Deceleration rate: 2,000 Hz/4 ms	D31	07D0
	Target frequency: 100,000 Hz	D32	86A0
		D33	0001
	Number of output pulses: 25,000 pulses	D34	61A8
		D35	0000

Setting details		Address	Data
Y axis	Acceleration rate: 2,000 Hz/4 ms	D40	07D0
	Deceleration rate: 2,000 Hz/4 ms	D41	07D0
	Target frequency: 100,000 Hz	D42	86A0
		D43	0001
	Number of output pulses: 50,000 pulses	D44	C350
		D45	0000

PLS2(887) Settings to Move from Position A to Position C

Setting details		Address	Data
X axis	Acceleration rate: 2,000 Hz/4 ms	D50	07D0
	Deceleration rate: 2,000 Hz/4 ms	D51	07D0
	Target frequency: 100,000 Hz	D52	86A0
		D53	0001
	Number of output pulses: 35,000 pulses	D54	88B8
		D55	0000
Y axis	Acceleration rate: 2,000 Hz/4 ms	D60	07D0
	Deceleration rate: 2,000 Hz/4 ms	D61	07D0
	Target frequency: 100,000 Hz	D62	86A0
		D63	0001
	Number of output pulses: 50,000 pulses	D64	C350
		D65	0000

PLS2(887) Settings to Move from Position A to Position D

Setting details		Address	Data
X axis	Acceleration rate: 2,000 Hz/4 ms	D70	07D0
	Deceleration rate: 2,000 Hz/4 ms	D71	07D0
	Target frequency: 100,000 Hz	D72	86A0
		D73	0001
	Number of output pulses: 25,000 pulses	D74	61A8
		D75	0000
Y axis	Acceleration rate: 2,000 Hz/4 ms	D80	07D0
	Deceleration rate: 2,000 Hz/4 ms	D81	07D0
	Target frequency: 100,000 Hz	D82	86A0
		D83	0001
	Number of output pulses: 30,000 pulses	D84	7530
		D85	0000

Ladder Program

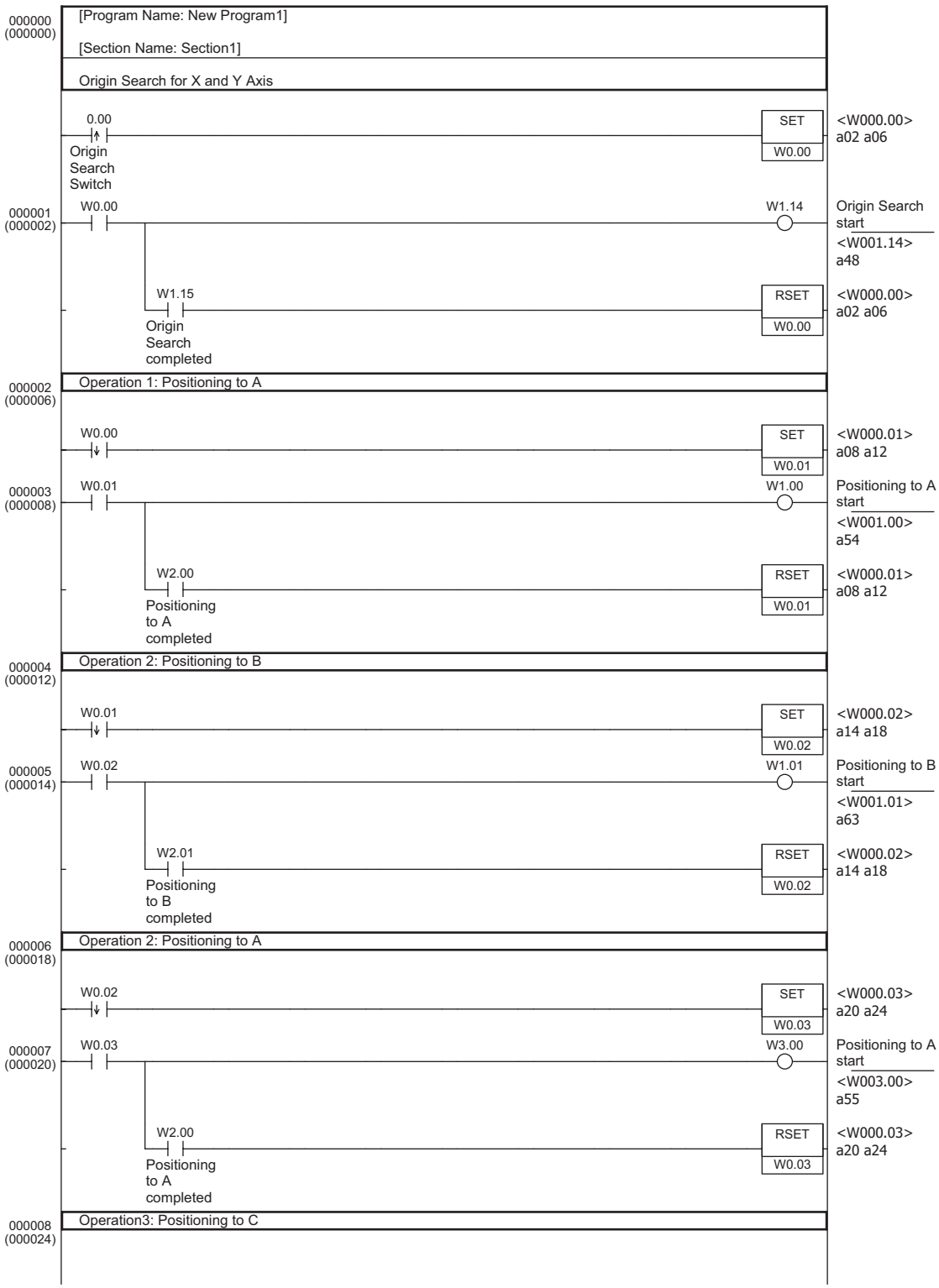

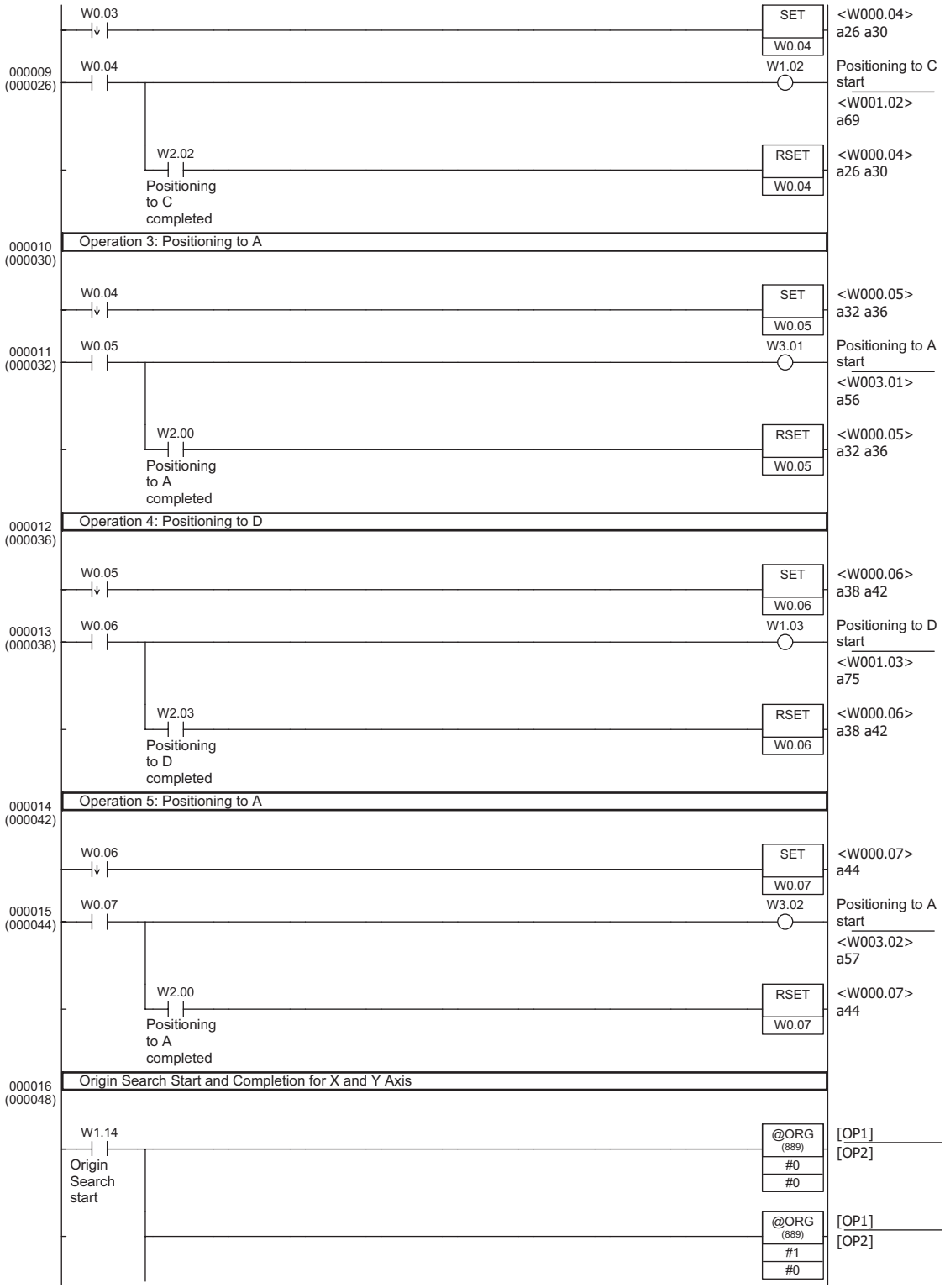
W0.03
SET
W0.04
<W000.04>
a26 a30
000009
(000026)
W0.04
W1.02
Positioning to C start
<W001.02>
a69
W2.02
Positioning to C completed
RSET
W0.04
<W000.04>
a26 a30
000010
(000030)
Operation 3: Positioning to A
W0.04
SET
W0.05
<W000.05>
a32 a36
000011
(000032)
W0.05
W3.01
Positioning to A start
<W003.01>
a56
W2.00
Positioning to A completed
RSET
W0.05
<W000.05>
a32 a36
000012
(000036)
Operation 4: Positioning to D
W0.05
SET
W0.06
<W000.06>
a38 a42
000013
(000038)
W0.06
W1.03
Positioning to D start
<W001.03>
a75
W2.03
Positioning to D completed
RSET
W0.06
<W000.06>
a38 a42
000014
(000042)
Operation 5: Positioning to A
W0.06
SET
W0.07
<W000.07>
a44
000015
(000044)
W0.07
W3.02
Positioning to A start
<W003.02>
a57
W2.00
Positioning to A completed
RSET
W0.07
<W000.07>
a44
000016
(000048)
Origin Search Start and Completion for X and Y Axis
W1.14
Origin Search start
@ORG
(889)
#0
#0
[OP1]
[OP2]
@ORG
(889)
#1
#0
[OP1]
[OP2]

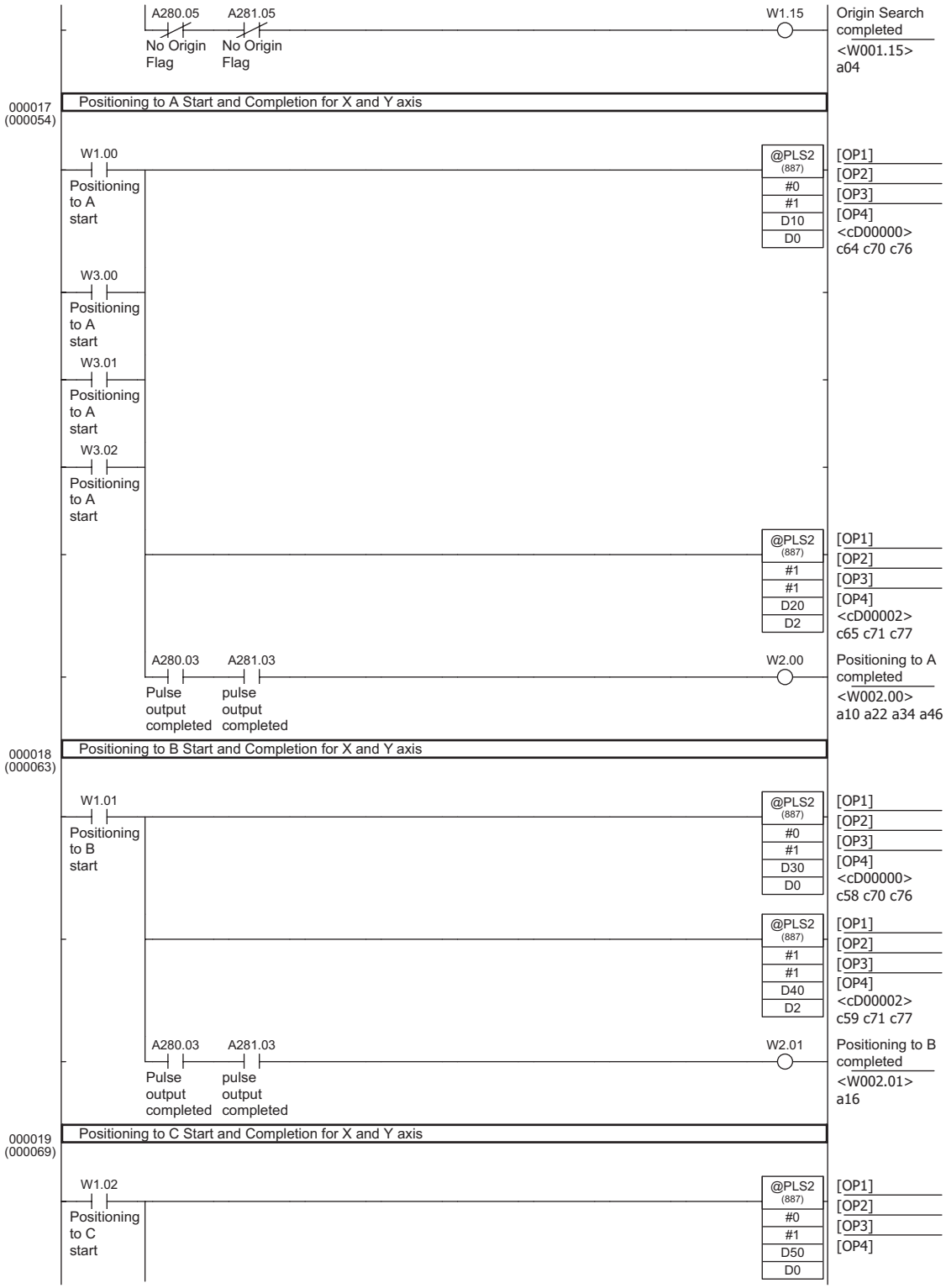
A280.05
No Origin Flag
A281.05
No Origin Flag
W1.15
Origin Search completed
<W001.15>
a04
000017
(000054)
Positioning to A Start and Completion for X and Y axis
W1.00
Positioning to A start
@PLS2
(887)
#0
#1
D10
D0
[OP1]
[OP2]
[OP3]
[OP4]
<cD00000>
c64 c70 c76
W3.00
Positioning to A start
W3.01
Positioning to A start
W3.02
Positioning to A start
@PLS2
(887)
#1
#1
D20
D2
[OP1]
[OP2]
[OP3]
[OP4]
<cD00002>
c65 c71 c77
A280.03
Pulse output completed
A281.03
pulse output completed
W2.00
Positioning to A completed
<W002.00>
a10 a22 a34 a46
000018
(000063)
Positioning to B Start and Completion for X and Y axis
W1.01
Positioning to B start
@PLS2
(887)
#0
#1
D30
D0
[OP1]
[OP2]
[OP3]
[OP4]
<cD00000>
c58 c70 c76
@PLS2
(887)
#1
#1
D40
D2
[OP1]
[OP2]
[OP3]
[OP4]
<cD00002>
c59 c71 c77
A280.03
Pulse output completed
A281.03
pulse output completed
W2.01
Positioning to B completed
<W002.01>
a16
000019
(000069)
Positioning to C Start and Completion for X and Y axis
W1.02
Positioning to C start
@PLS2
(887)
#0
#1
D50
D0
[OP1]
[OP2]
[OP3]
[OP4]

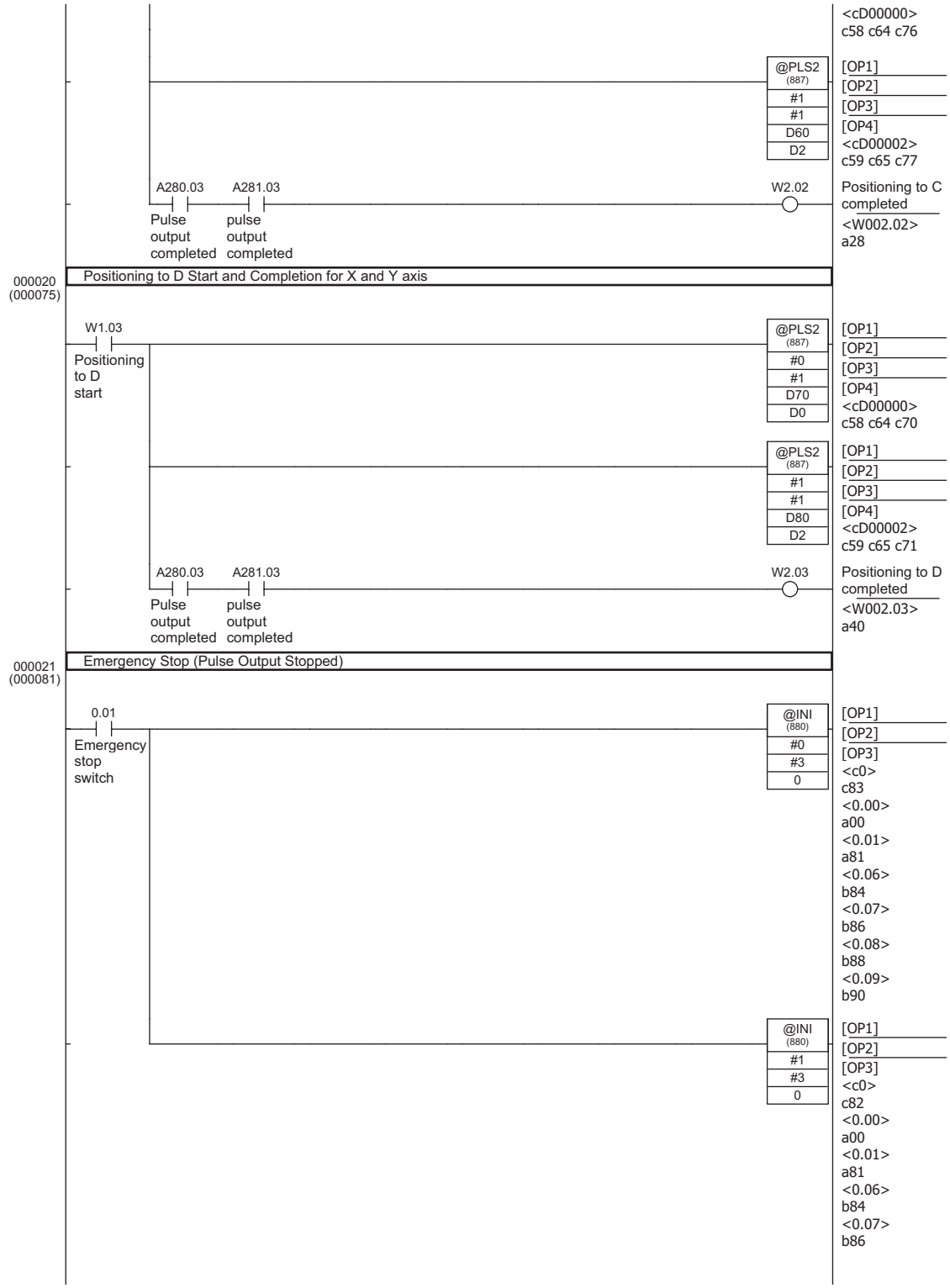
<cD00000>
c58 c64 c76
@PLS2
(887)
#1
#1
D60
D2
[OP1]
[OP2]
[OP3]
[OP4]
<cD00002>
c59 c65 c77
A280.03
A281.03
W2.02
Positioning to C completed
<W002.02>
a28
Pulse output completed
pulse output completed
000020
(000075)
Positioning to D Start and Completion for X and Y axis
W1.03
Positioning to D start
@PLS2
(887)
#0
#1
D70
D0
[OP1]
[OP2]
[OP3]
[OP4]
<cD00000>
c58 c64 c70
@PLS2
(887)
#1
#1
D80
D2
[OP1]
[OP2]
[OP3]
[OP4]
<cD00002>
c59 c65 c71
A280.03
A281.03
W2.03
Positioning to D completed
<W002.03>
a40
Pulse output completed
pulse output completed
000021
(000081)
Emergency Stop (Pulse Output Stopped)
0.01
Emergency stop switch
@INI
(880)
#0
#3
0
[OP1]
[OP2]
[OP3]
<c0>
c83
<0.00>
a00
<0.01>
a81
<0.06>
b84
<0.07>
b86
<0.08>
b88
<0.09>
b90
@INI
(880)
#1
#3
0
[OP1]
[OP2]
[OP3]
<c0>
c82
<0.00>
a00
<0.01>
a81
<0.06>
b84
<0.07>
b86

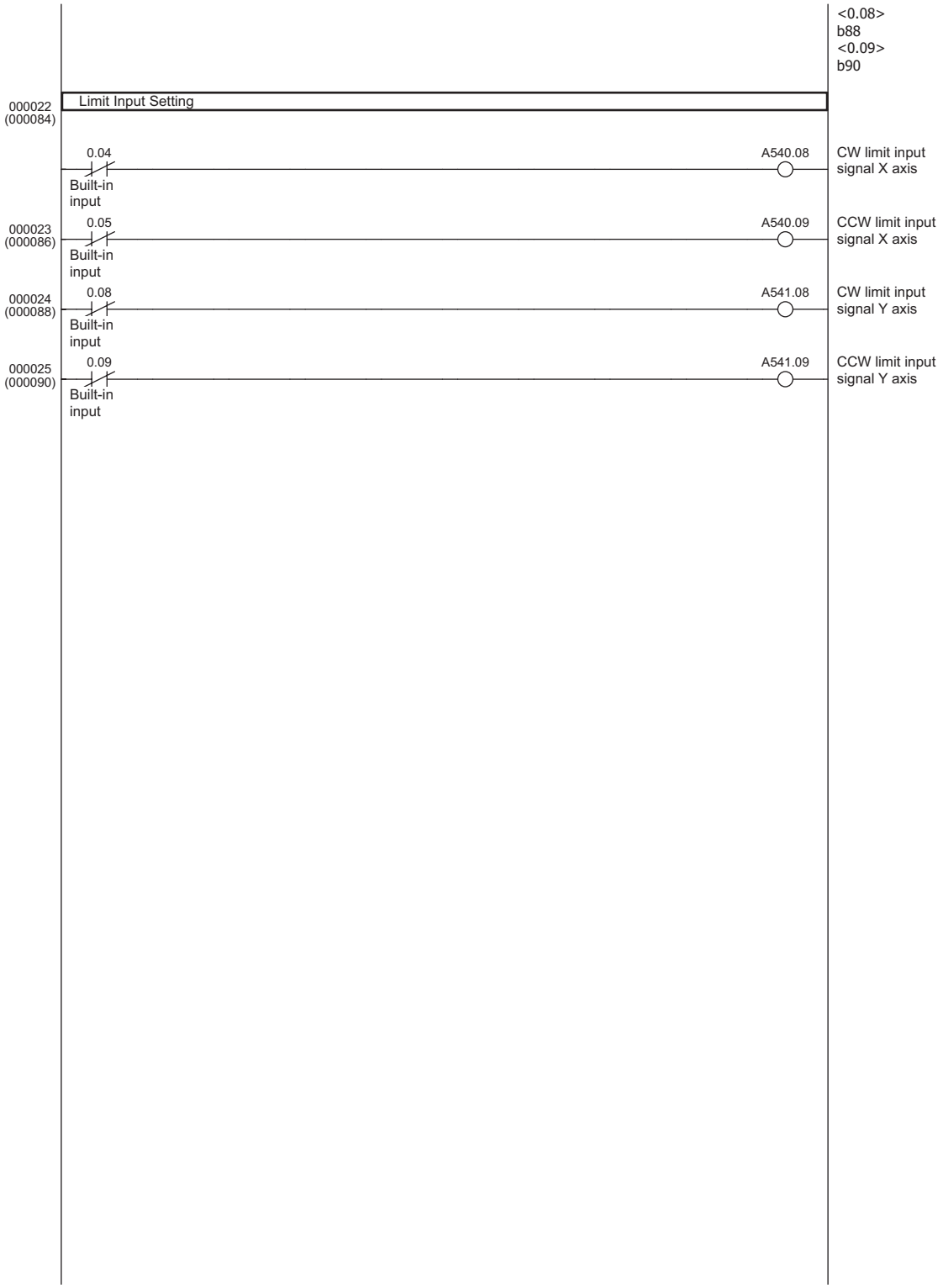
<0.08>
b88
<0.09>
b90
000022
(000084)
Limit Input Setting
0.04
Built-in
input
A540.08
CW limit input
signal X axis
000023
(000086)
0.05
Built-in
input
A540.09
CCW limit input
signal X axis
000024
(000088)
0.08
Built-in
input
A541.08
CW limit input
signal Y axis
000025
(000090)
0.09
Built-in
input
A541.09
CCW limit input
signal Y axis

Feeding Wrapping Material: Interrupt Feeding

Specifications and Operation

Feeding Wrapping Material in a Vertical Pillow Wrapper

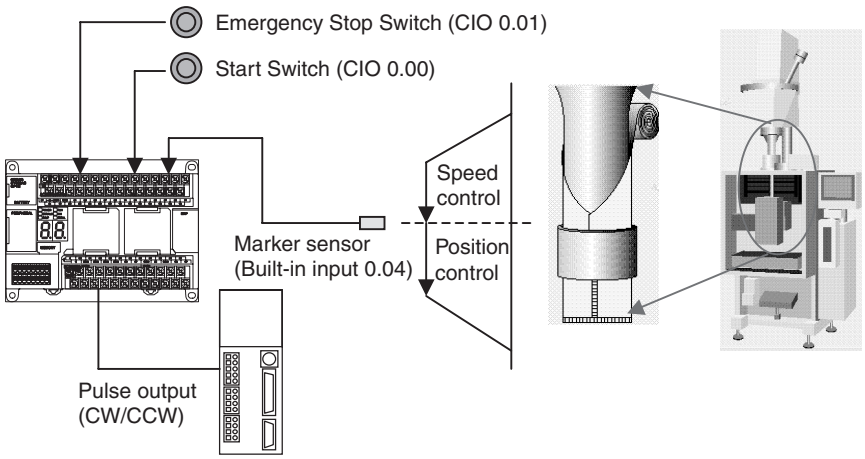

■ Operation Pattern

Speed control is used to feed wrapping material to the initial position. When the marker sensor input is received, fixed-distance positioning is performed before stopping.

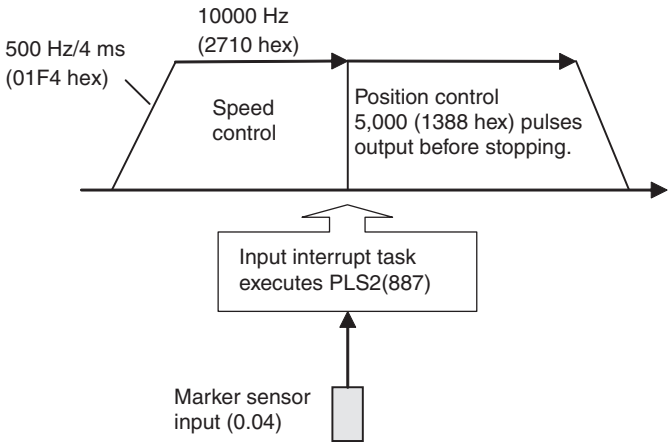

■ Operation

1,2,3...

1. Speed control is used to feed wrapping material to the initial position when the Start Switch (CIO 0.00) is activated.
2. When the Marker Sensor Input (0.04) is received, PLS2(887) is executed in interrupt task 140.
3. Fixed-distance positioning is executed with PLS2(887) before stopping.
4. An emergency stop is executed to stop pulse output with the Emergency Stop input (0.01).

Preparation

■ PLC Setup

Setting details
Enable using built-in input IN0 as an interrupt input.

Note The interrupt input setting is read when the power supply is turned ON.

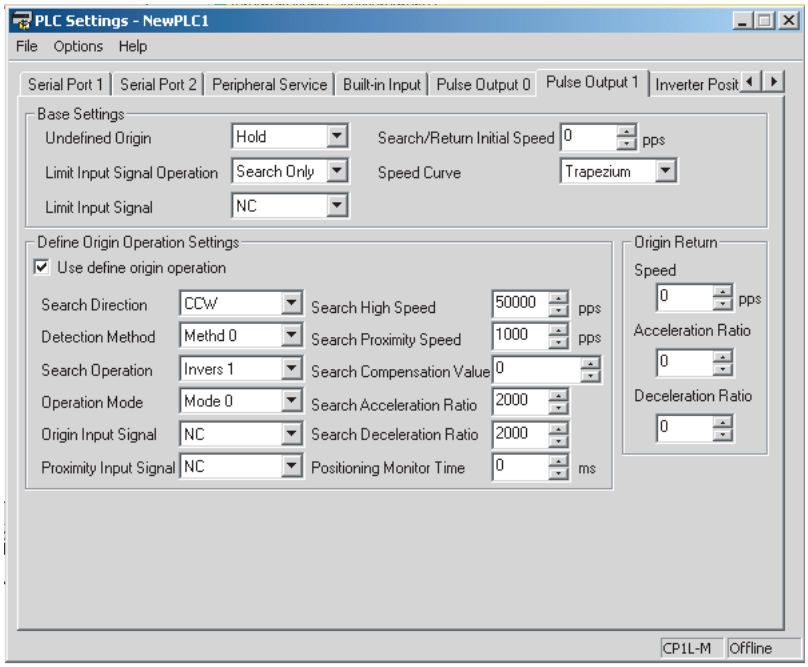

■ DM Area Settings

Speed Control Settings to Feed Wrapping Material to Initial Position

Setting details	Address	Data
Acceleration rate: 1,000 Hz/4 ms	D0	03E8
Target frequency: 10,000 Hz	D1	2710
	D2	0000

Positioning Control Settings for Wrapping Material

Setting details	Address	Data
Acceleration rate: 500 Hz/4 ms	D10	01F4
Deceleration rate: 500 Hz/4 ms	D11	01F4
Target frequency: 10,000 Hz	D12	2710
	D13	0000
Number of output pulses: 5,000 pulses	D14	1388
	D15	0000
Starting frequency: 0 Hz	D16	0000
	D17	0000

Ladder Program

Cyclic Task Program (Executed at Startup)

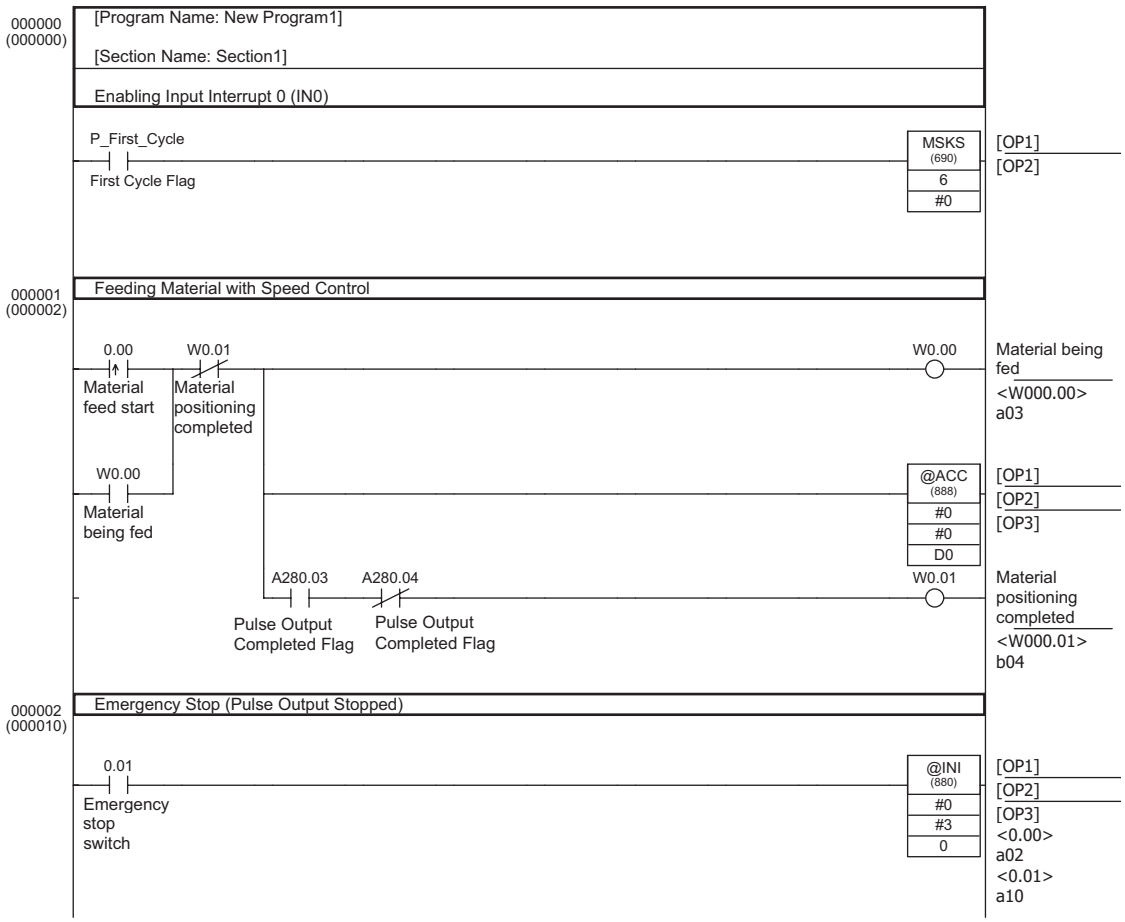

Program for Interrupt Task 140

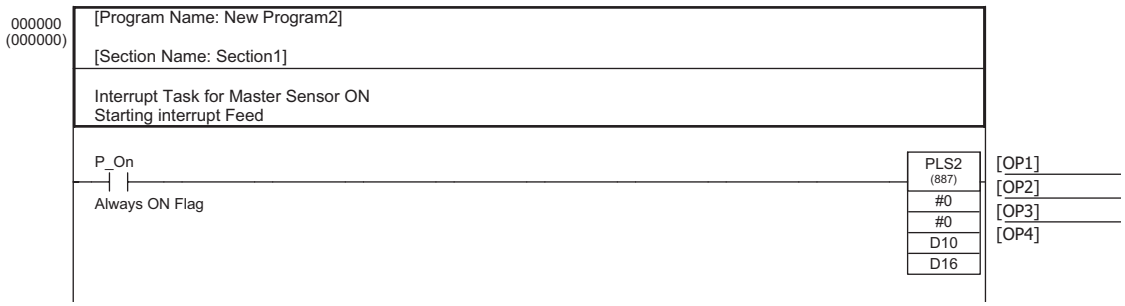

5-3 Inverter Positioning

5-3-1 Features

Positioning can be achieved using an inverter. This enables a far more economical positioning system than with a servomotor.

Feedback Control with Error Counter

A position error counter built into the CP1L CPU Unit enables high-precision positioning with an Inverter using feedback control. The PULSE OUTPUT instruction is used in the ladder program in the CP1L CPU Unit to output internal pulses to a built-in error counter.

The error counter calculates the position error from the number of input internal pulses and the number of feedback pulses from the rotary encoder, and sends speed commands to the inverter so that the position error goes to zero.

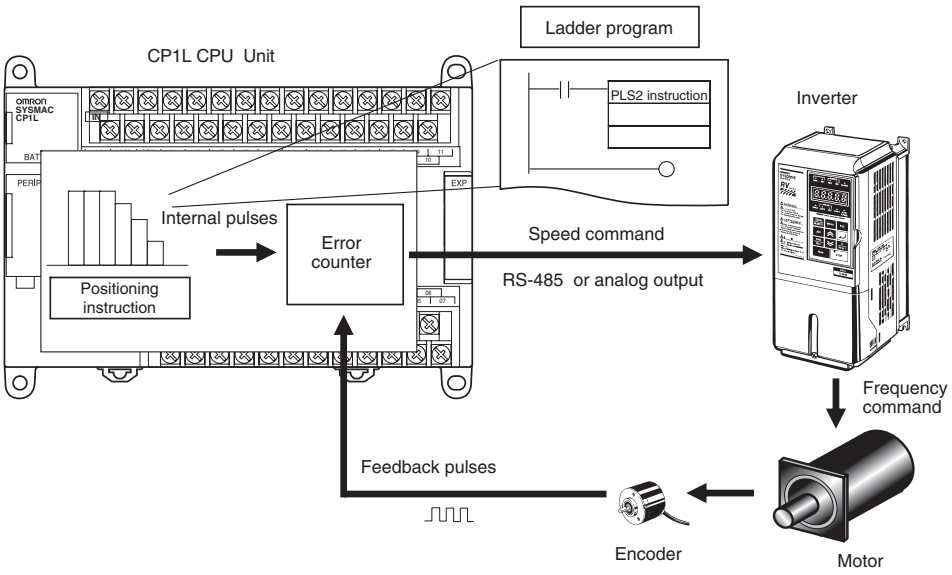

Reducing Positioning Time

With traditional inverter positioning, positioning patterns are created in which set positions are detected to trigger changes in the speed. Pulses are read from the encoder and compared to set values during positioning to enable determining when a position requiring a speed change has been reached. This results in positioning errors at speed-change points when stopping at high speed, reducing stopping precision. To ensure high-precision positioning, sufficient deceleration was required before stopping, but this increases the positioning time.

With the CP1L's inverter positioning function, feedback pulses are used so that the prevent position is always known, increasing positioning accuracy. And because preset positioning patterns are used for deceleration and stopping, positioning time is reduced.

Traditional Inverter Positioning

The PLC counts the feedback pulses from the encoder using a high-speed counter. When a deceleration point is reached, the speed is changed to control the stop position. If the precision of the stop position must be increased, the stop position must also be detected to control positioning.

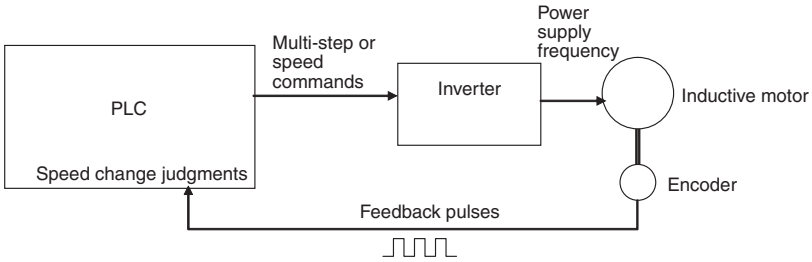

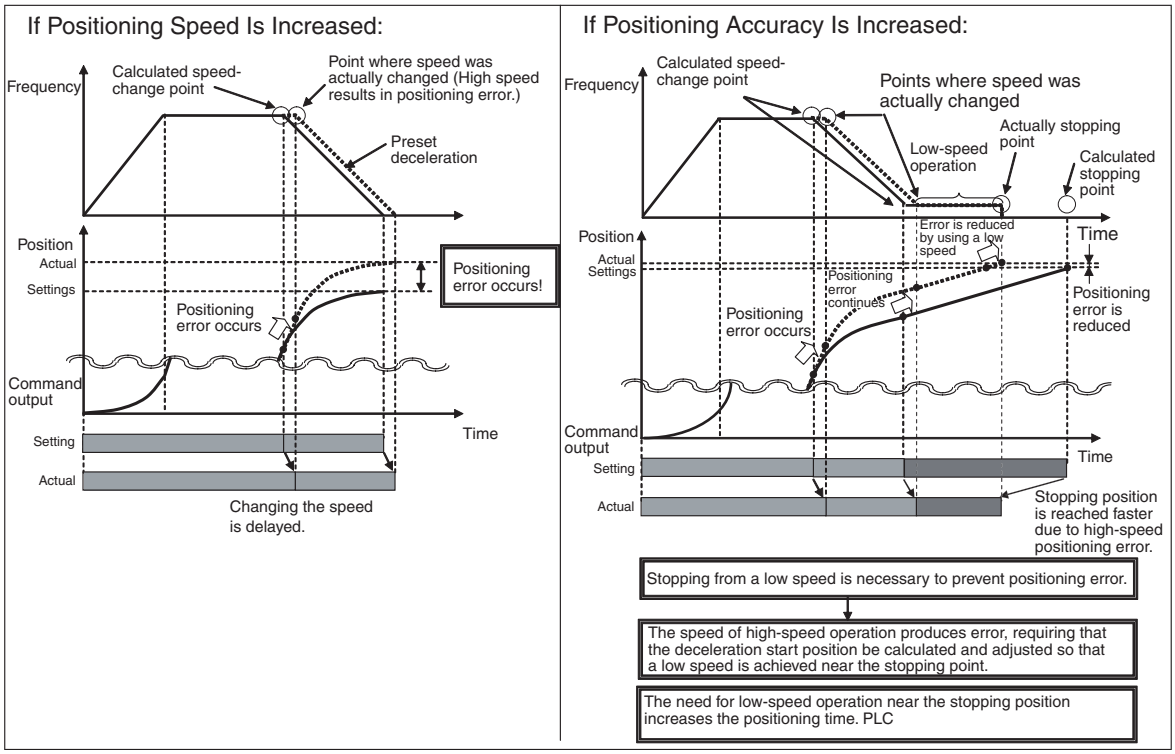

Inverter Positioning with the CP1L

With the CP1L's inverter positioning function, feedback is constantly read for the positioning data while controlling the position.

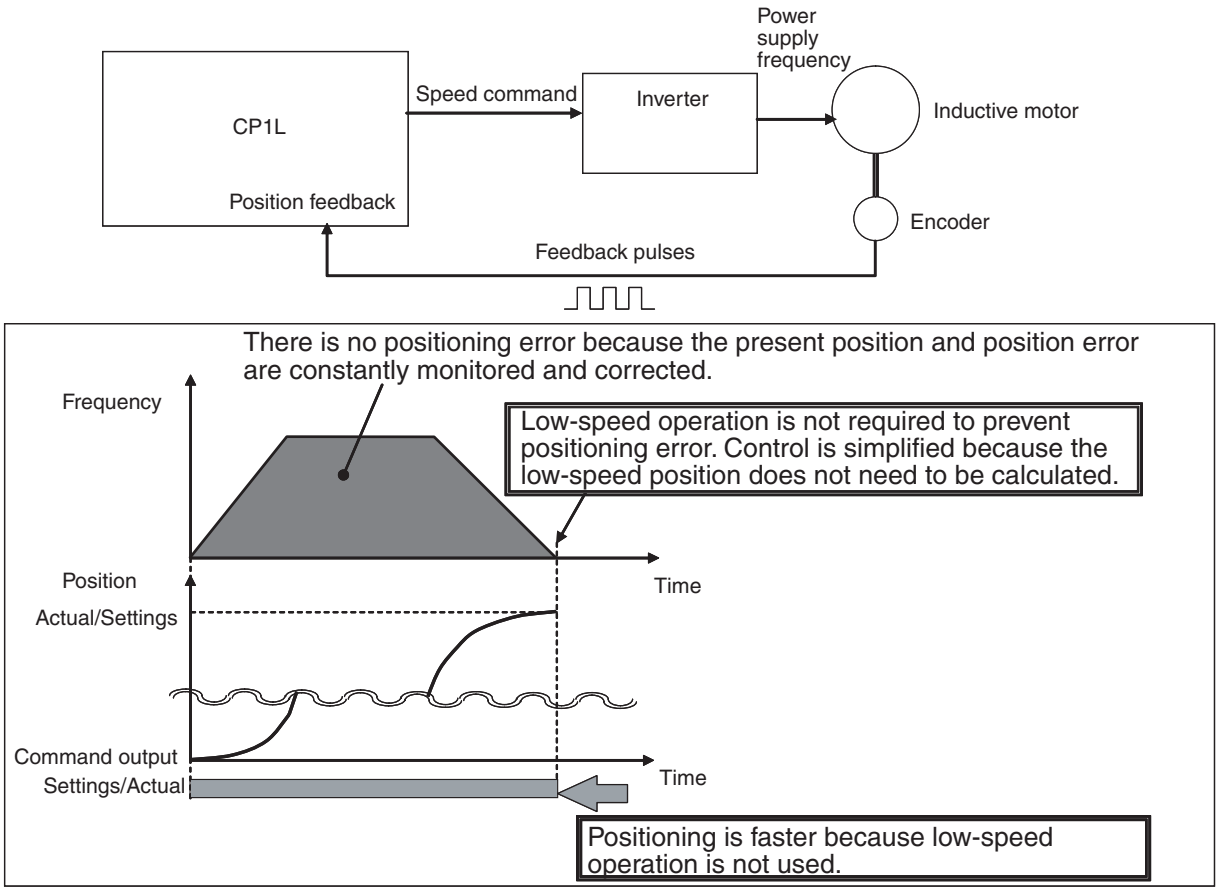

Note

(1) The CP1L's inverter positioning function is designed to increase positioning speed and stopping precision by reading position information and using a feedback loop with an error counter to switch speeds. It does not increase the response, stopping precision, or speed change rate of the inverter and motor. These are characteristics of the inverter and motor. Refer to user documentation on your inverter and motor for details.

(2) The corresponding pulse output number (0 or 1) cannot be used for the PULSE WITH VARIABLE DUTY FACTOR instruction (PWM) if inverter positioning 0 or 1 is used. The high-speed counter of the same number (0 or 1) is used to input the feedback pulse.

5-3-2 System Configuration

Speed Commands Using Serial Communications or Analog Outputs

There are two ways to send speed commands to the inverter: serial communications and analog outputs.

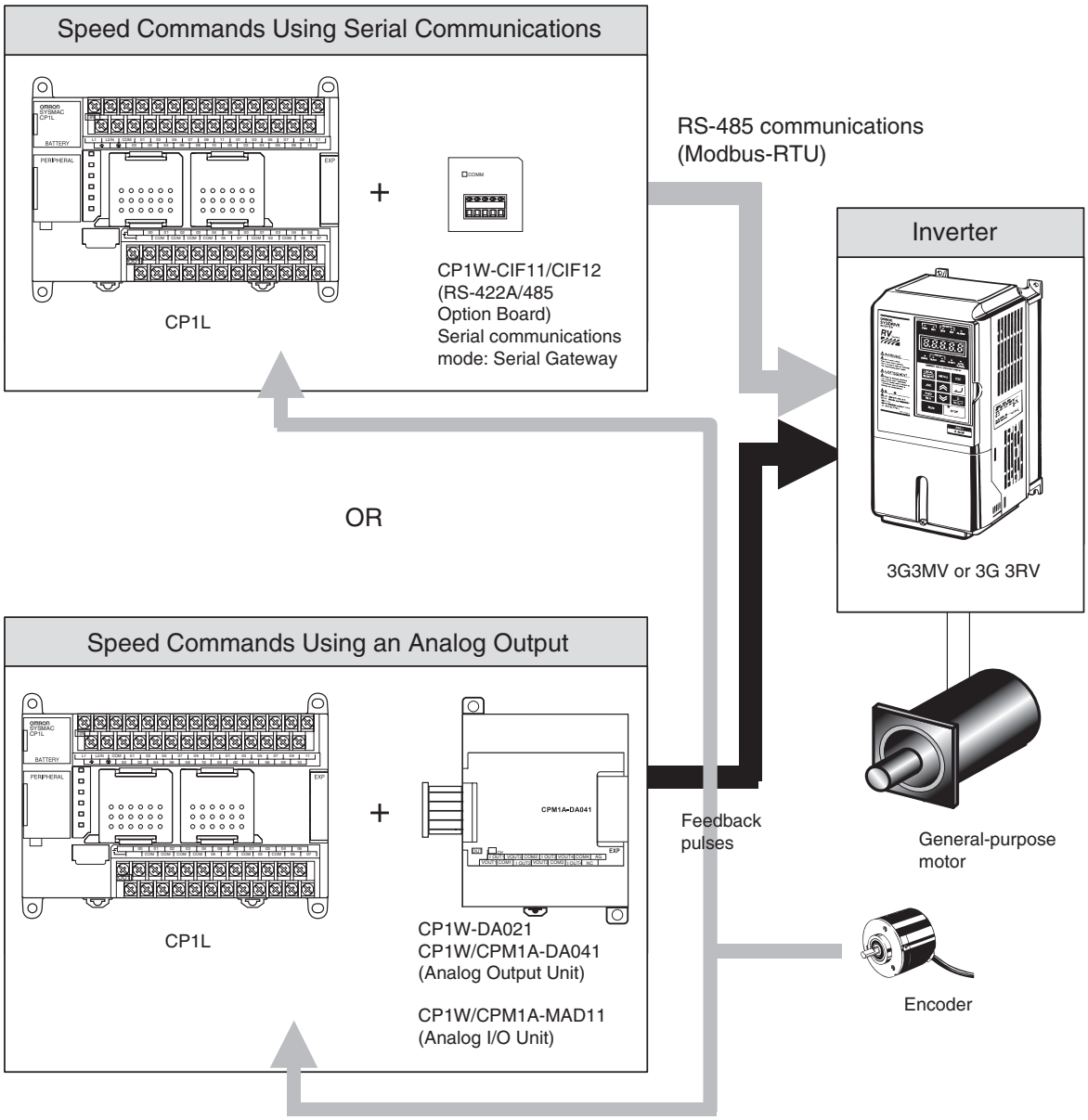

Note

(1) The inverter positioning function uses either serial communications or an analog output, and is thus possible with a CP1L CPU Unit with either transistor or relay outputs.

(2) The inverter positioning function does not use external pulse outputs. Normal outputs are used for commands to the inverter (e.g., forward/reverse commands).

■ **Precaution for Inverter Settings**

- Set the stop time to 0 second.
- Use Modus-RTU communication when the send delay setting is above 10ms.
  However, if the send delay time is too long, the inverter response to the command from the PLC will be slow.

5-3-3 Functional Overview

Operation

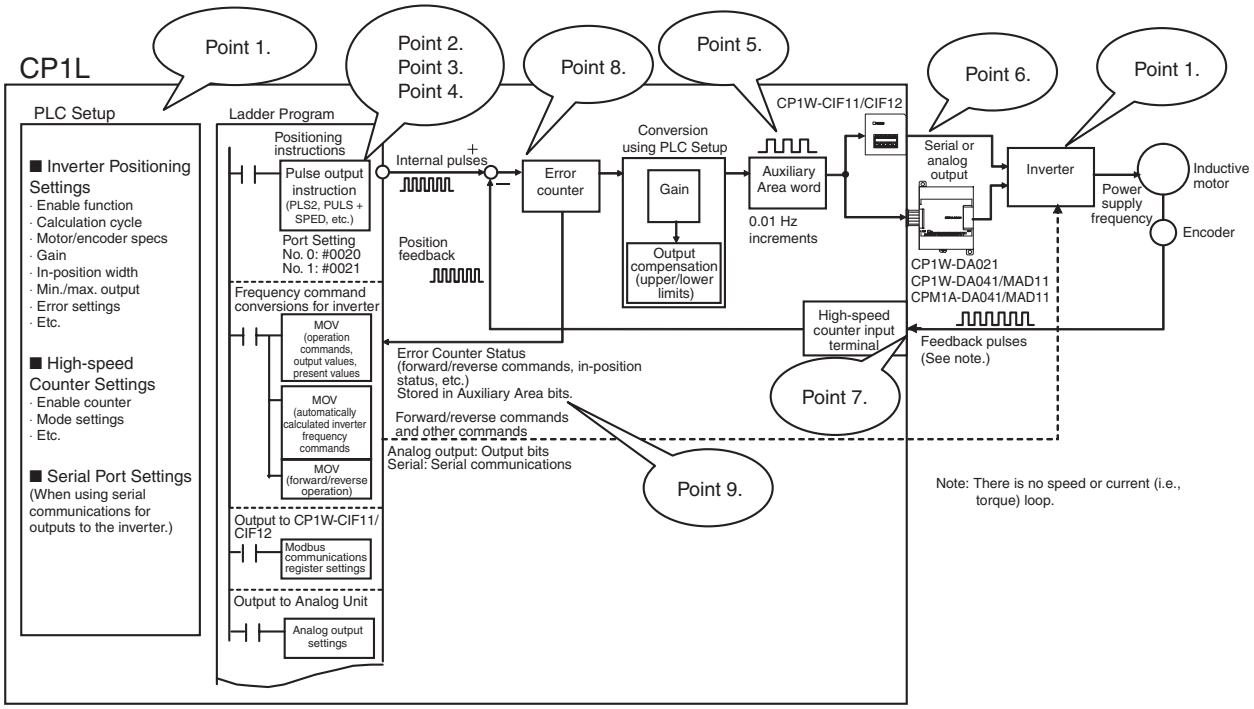

1. To use inverter positioning, the motor and encoder specifications, feedback gain, and other parameters must be set in the PLC Setup. The high-speed counter and inverter must also be set.
2. Pulse output instructions, such as PLS2 or PULS with SPED, are used to execute positioning. Although normally the pulse output instructions are used to output pulses from CP1L output contacts, when inverter positioning 0 or inverter positioning 1 is enabled in the PLC Setup, the internal position error counter (called simply the “error counter”) is enabled and the pulse output instruction will output internal pulses to the error counter. Both error counters 0 and 1 can be used at the same time.
3. For the number of pulses (i.e., the amount of movement) set in the pulse output instruction, use the number of feedback pulses from the encoder. For the pulse frequency set in the pulse output instruction, use the motor power supply frequency converted to the feedback pulse frequency from the encoder. (Refer to *5-3-7 Determining the Internal Pulse Output Frequency* for details.)
4. Specify an inverter positioning port for the pulse output instruction (port 0: 0020, port 1: 0021). The internal pulses will be output to the error counter for the specified port.

5. The number of pulses remaining in the error counter is converted to a power supply frequency command for the inverter according to a value set in the PLC Setup and output to a word in the Auxiliary Area in increments of 0.01 Hz.
6. The frequency command value output to the Auxiliary Area is output to the inverter from the ladder program according to the inverter command method (i.e., RS-485 communications or analog output). (Refer to *5-3-9 Automatic Calculation of Inverter Frequency Command Value* for details.)
7. When a speed command is sent to the inverter, the motor will turn at the command speed and feedback pulses (i.e., the amount of movement) from the encoder will be returned to a high-speed counter of the CP1L. The CP1L will continue to send a speed command to the inverter until the error counter (i.e., the position error) goes to zero, i.e., until positioning has been completed.
8. When the error counter goes to zero, the speed command to the inverter will also go to zero. Even after the completion of internal pulse output (i.e., position command) from the pulse output instruction, the CP1L will maintain the error counter so that is remains at zero.
9. The status of the error counter (such as the command direction and in-position status) will be stored in the Auxiliary Area. This status can be read from the user program to enable controlling output of commands to the inverter.

For example, if a change in the load causes the motor shaft to turn, feedback pulses from the encoder will enter the error counter, the value in the error counter will be reduced, and the Reverse Command Flag in the Auxiliary Area will turn ON. By writing the ladder program to output a reverse operation command to the inverter for the Reverse Command Flag, a command in the opposite direction of motor shaft movement will be output from the CP1L to the inverter, causing the motor to return to its original position. This compensating operation to continuously maintain the current stop position is called a servo lock.

Other Functions

Servo Locks with Vector Control Inverters

The servo lock on an inverter can be used to stop positioning. By using the inverter's servo lock, the inverter positioning function and the output command to the inverter can be stopped from the user program without using feedback control even if the error counter value is not zero. This enables servo locks when using an inverter with vector control.

Clearing the Error Counter for Errors

If the motor shaft is moved manually for error stops or when the inverter is stopped, feedback pulses will accumulate in the error counter. This can be very dangerous because it may cause the motor to suddenly return to the original position at high speed when operation is started again. To prevent such problems, an error counter error output can be produced when more than a set number of pulses accumulated in the error counter when positioning operations are stopped.

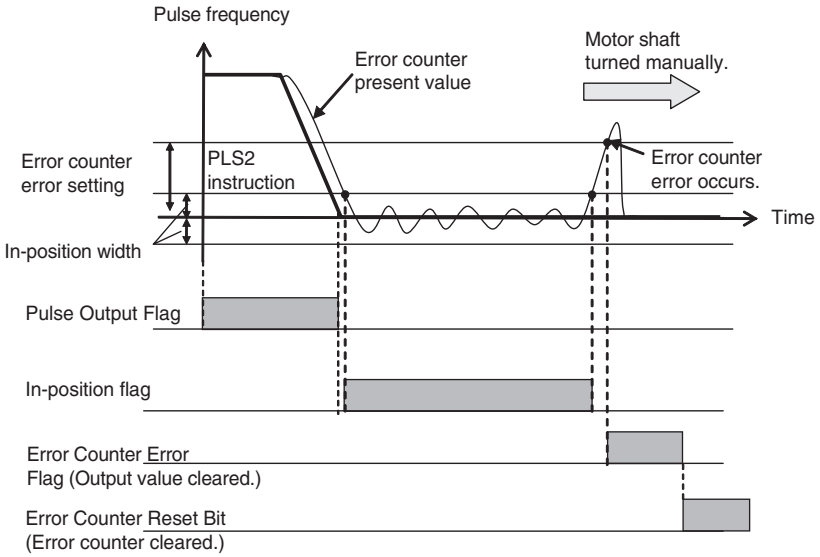

Low-speed Operation Using Minimum Output Setting

An inductive motor driven with an inverter is different from a servomotor in that the torque at low speeds is so low that it may not be possible to turn the motor shaft at the minimum frequency. The CP1L provide a minimum output setting the ensure a minimum output to enable positioning at low speeds even when there are extremely few pulses in the error counter.

Absolute Positioning

The amount of movement (i.e., amount of rotation) is input to the high-speed counter as feedback pulses. During inverter positioning, the present value of the high-speed counter can be used as an absolute position.

Note The absolute position will change if the present value of the high-speed counter is changed or the high-speed counter is reset.

5-3-4 Specifications

Inverter Positioning Specifications

Item	Specification
Applicable inverters	Inverter that receives frequency commands from an analog input or via Modbus-RTU communications. (Control method: V/f control, vector control, etc.)
Applicable motors	Depends on the inverter (e.g., squirrel-cage inductive motor)
Number of positioning ports and response frequency	Two ports at 100 kHz (within the speed command range of the pulse output instructions)
Inverter command output method	Modbus-RTU communications commands or analog output (from ladder program)
Present value coordinate system	With origin: Absolute coordinate system Without origin: Relative coordinate system
Present value range	32 bits: 8000 000 to 7FFF FFFF hex (range of position command values and present values for pulse output instructions)
Output modes	Continuous output (Number of pulses not specified.) Independent mode (Number of pulses specified.)
Acceleration/deceleration control	Trapezoidal or S-curve acceleration/deceleration

Item	Specification
Specifications of number of pulses	Relative positions: 0000 0000 to 7FFF FFFF hex (2,147,483,647 incrementing and decrementing) Absolute positions: 8000 0000 to 7FFF FFFF hex (–2,147,483,648 to 2,147,483,647) (Ranges of position command values and present values for pulse output instructions)
Origin searches	Motor driver and signal wire modes: 3 modes Origin search modes: 2 modes Origin detection methods: 3 methods
Feedback pulse input ports	High-speed counter 0 and high-speed counter 1 (fixed) Maximum response frequency: 100 kHz
Present value range for feedback pulses	32 bits: 8000 000 to 7FFF FFFF hex
Error counter range	8000 to 7FFF hex (signed)
Error counter calculation cycle	4 to 1,020 ms (x4)

Note

(1) If inverter positioning 0 is used, pulse output 0 and PWM0 cannot be used. If inverter positioning 1 is used, pulse output 1 and PWM1 cannot be used.

(2) If inverter positioning 1 is used with a CPU Unit with 14 I/O Points, origin searches cannot be used.

(3) If the continuous output mode is specified (i.e., if the number of pulses is not specified), be sure to use the high-speed counter (linear mode) so that it does not overflow.

High-speed Counter Specifications for Inverter Positioning

Item		Specification
Response frequency and number of counters		Two 2-phase counters at 50 kHz and two single-phase counters at 100 kHz
Counting mode		Differential-phase inputs (x4), up/down pulse inputs, or pulse plus direction inputs
Numeric range mode		Linear mode **Note** Always set linear mode when using inverter positioning.
Numeric range		32 bits (–2,147,483,648 to 2,147,483,647)
Reset method		Phase Z signal (reset input) + software reset, or software reset
Interrupts (See note.)	Target value matching	Up to 48 target values and interrupt task numbers can be registered.
	Zone comparison	Up to 8 sets of upper values, lower values, and interrupt task numbers can be registered.

Note Target value matching and zone comparisons can be used for high-speed counters with a feedback pulse input from an encoder even when using inverter positioning.

5-3-5 Application Procedure for Inverter Positioning

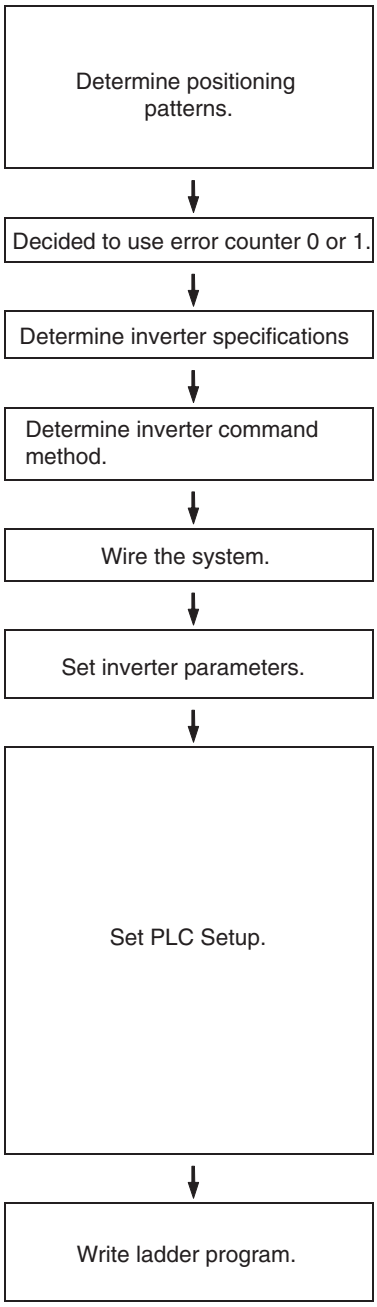

Determine applicability.
Determine instructions to use.
· PLS2
· PULS + SPED
· PULS + ACC
· Etc.

For example, the control method (V/f control or vector control)

· RS-485 communications (Modbus-RTU)
· Analog signal

· Enable inverter positioning
  Error counter calculation cycle
  Gain
  In-position width
  Minimum output
  Error counter error setting
  Power supply frequency per motor rotations/s
  Number of encoder pulses per motor rotation
· High-speed counter
  Counting mode
  Numeric range mode
  Etc.

· Enter positioning instructions.
· Program scaling for inverter frequency commands.
· Program forward/reverse operation instructions, stopping instructions, etc.

■ Positioning Instruction Settings

- PULSE OUTPUT (PLS2)
  Port: Inverter positioning, Mode: Absolute pulse
- SET PULSES (PULS)
  Port: Inverter positioning, Mode: Absolute pulse
  + SPEED OUTPUT (SPED)
  Mode: Independent
- SET PULSES (PULS)
  Port: Inverter positioning, Mode: Absolute pulse
  + ACCELERATION CONTROL (ACC)
  Port: Inverter positioning, Mode: Independent

- MODE CONTROL (INI)
  Port: Inverter positioning, stopping inverter positioning
- HIGH-SPEED COUNTER PV READ (PRV)
  Port: Inverter positioning, Operation: Reading error counter, inverter positioning status, or error counter present value

■ Automatic Calculation of Inverter Frequency Commands

- For either serial communications or an analog output, the power supply frequency per motor revolutions/s, the number of encoder pulses per motor revolution, and the error counter calculation cycle can be set in the PLC Setup to automatically calculate the inverter frequency command values and store it in A23/A33 in increments of 0.01 Hz.
- For serial communications, the ladder program is used to output the value in A23/A33 to the inverter using serial communications.
- For analog output, the value in A23/A33 can be scaled to analog output values and output from the Analog Unit to the inverter.

■ Forward/Reverse Operation Commands, Stopping Commands, Etc.

- The Forward Command Flag (A26.01/A36.01) and Reverse Command Flag (A26.02/A36.02) can be used as input conditions for forward and reverse operation commands.
- The Operation Command Flag (A26.00/A36.00) and In-position Flag (A26.03/A36.03) can be used as input conditions to execute scaling to inverter frequency commands and to execute stop commands.

5-3-6 Instruction Specifications

The normal pulse output instructions are used (PLS2, PULS + SPED, or PULS + ACC). One of the inverter positioning ports is specified as the port for the instruction. Just like pulses are output externally for the normal pulse output instructions, error counter pulses are accumulated in the internal error counter when executing inverter positioning.

Port Designation Operand Specifications

When executing pulse output instructions or status read instructions for inverter positioning, a port number for inverter positioning is specified for the port operand of the instruction. The following values are used.

0020 hex: Inverter positioning 0
0021 hex: Inverter positioning 1

When reading the present value of inverter positioning, use the following values to specified the port number for inverter positioning.

0030 hex: Inverter positioning 0 (signed)
0031 hex: Inverter positioning 1 (signed)

Set value	Specified port	Applicable instructions
0000	Pulse output 0	---
0001	Pulse output 1	---
0002	Pulse output 2	---
0003	Pulse output 3	---
0010	High-speed counter input 0	---
0011	High-speed counter input 1	---
0012	High-speed counter input 2	---
0013	High-speed counter input 3	---
0020	Inverter positioning 0	SPED, PULS, ACC, PLS2, INI, PRV, ORG
0021	Inverter positioning 1	SPED, PULS, ACC, PLS2, INI, PRV, ORG

Set value	Specified port	Applicable instructions
0030	Error counter 0 (signed)	PRV
0031	Error counter 1 (signed)	PRV
0100	Interrupt input 0 (counter mode)	---
:	:	:
0107	Interrupt input 7 (counter mode)	---
1000	PWM output 0	---
1001	PWM output 1	---

Applicable Instructions

The following seven instructions can be used to execute inverter positioning. The relationship between the instructions and internal pulse outputs is as follows:

Instruction	Overview	Positioning (Independent Mode)			Origin searches
		Pulse output with no acceleration/ deceleration	Pulse output with acceleration/ deceleration		
			Trapezoid, same rate for acceleration/ deceleration	Trapezoid, different rates for acceleration/ deceleration	
PULS(886) SET PULSES	Sets the number of internal pulses to output.	Applicable	---	---	---
SPED(885) SPEED OUTPUT	Controls pulse output without acceleration or deceleration. (The number of internal pulses must be set in advance with PULS(886).)	Applicable	---	---	---
ACC(888) ACCELERATION CONTROL	Controls pulse output with acceleration or deceleration using the same rate for both. (The number of internal pulses must be set in advance with PULS(886).)	---	Applicable	---	---
PLS2(882) PULSE OUTPUT	Controls pulse output with acceleration or deceleration using a different rate for each (The number of internal pulses is also set.)	---	---	Applicable	---
ORG(889) ORIGIN SEARCH	Actually moves the motor to establish the origin using origin proximity input, origin input, etc.	---	---	---	Applicable
INI(880) MODE CONTROL	Used to stop internal pulse output and inverter positioning. It can also be used to change the present value of pulse output (thus establishing the origin).	Applicable	Applicable	Applicable	---
PRV(881) HIGH-SPEED COUNTER PV READ	Reads the present value of the internal pulse output or error counter.	Applicable	Applicable	Applicable	---

SET PULSES: PULS(886)

PULS(886) is used to set the pulse output amount (number of output pulses) for pulse outputs that are started later in the program using SPED(885) or ACC(888) in independent mode.

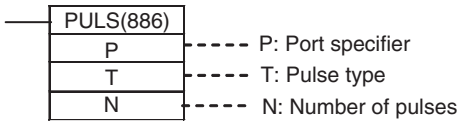

Operand		Description	
P	Port specifier	0020 hex: Inverter positioning 0 0021 hex: Inverter positioning 1	
T	Pulse type	0000 hex: Relative 0001 hex: Absolute	
N	Number of pulses	N (lower 4 digits)	• Relative pulses: 0000 0000 to 7FFF FFFF hex (0 to 2,147,489,647) • Absolute pulses: 8000 0000 to 7FFF FFFF hex (–2,147,489,648 to 2,147,489,647)
		N+1 (upper 4 digits)	

SPEED OUTPUT: SPED(885)

SPED(885) is used to start pulse output without acceleration or deceleration. It is used together with PULS(886). SPED(885) can also be executed during pulse output to change the output frequency.

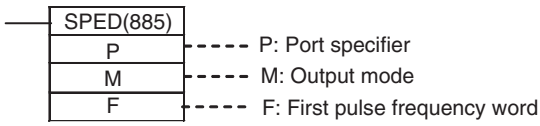

Operand			Description
P	Port specifier		0020 hex: Inverter positioning 0 0021 hex: Inverter positioning 1
M	Output mode	Bits 0 to 3	Mode 0 hex: Continuous 1 hex: Independent
		Bits 4 to 7	Direction 0 hex: CW 1 hex: CCW
		Bits 8 to 11	Not used: Always set to 0 hex.
		Bits 9 to 15	Not used: Always set to 0 hex.
F	First pulse frequency word	F (lower 4 digits)	Output Frequency in Hz Pulse output 0 or 1: 0000 0000 to 0001 86A0 hex (0 to 100 kHz)
		F+1 (upper 4 digits)	

ACCELERATION CONTROL: ACC(888)

ACC(888) outputs pulses to the specified output port at the specified frequency using the specified acceleration and deceleration rate. (Acceleration rate is the same as the deceleration rate.) For positioning, ACC(888) is used in combination with PULS(886). ACC(888) can also be executed during pulse output to change the target frequency or acceleration/deceleration rate.

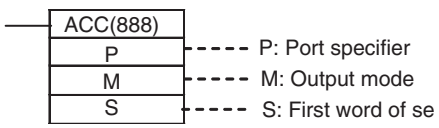

Operand		Description
P	Port specifier	0020 hex: Inverter positioning 0 0021 hex: Inverter positioning 1

Operand			Description
M	Output mode	Bits 0 to 3	Mode 1 hex: Independent
		Bits 4 to 7	Direction 0 hex: CW 1 hex: CCW
		Bits 8 to 11	Not used: Always set to 0 hex.
		Bits 9 to 15	Not used: Always set to 0 hex.
S	First word of settings table	S	Acceleration/Deceleration Rate 1 to 65,535 Hz (0001 to FFFF hex)
		S+1 (lower 4 digits)	Target Frequency in Hz Pulse output 0 to 3: 0000 0000 to 0001 86A0 hex (0 to 100 kHz)
		S+2 (upper 4 digits)	

PULSE OUTPUT: PLS2(887)

PLS2(887) outputs a specified number of pulses to the specified port. Pulse output starts at a specified startup frequency, accelerates to the target frequency at a specified acceleration rate, decelerates at the specified deceleration rate, and stops at approximately the same frequency as the startup frequency. Only independent mode positioning is supported.

PLS2(887) can also be executed during pulse output to change the number of output pulses, target frequency, acceleration rate, or deceleration rate. PLS2(887) can thus be used for sloped speed changes with different acceleration and deceleration rates, target position changes, target and speed changes, or direction changes.

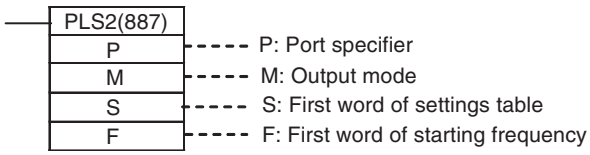

Operand			Description	
P	Port specifier		0020 hex: Inverter positioning 0 0021 hex: Inverter positioning 1	
M	Output mode	Bits 0 to 3	Mode 0 hex: Relative pulses 1 hex: Absolute pulses	
		Bits 4 to 7	Direction 0 hex: CW 1 hex: CCW	
		Bits 8 to 11	Not used: Always set to 0 hex.	
		Bits 9 to 15	Not used: Always set to 0 hex.	
S	First word of settings table	S1	Acceleration rate 0001 to FFFF hex (1 to 65,535 Hz)	Specify the increase or decrease in the frequency in Hz per pulse control period (4 ms).
		S1+1	Deceleration rate 0001 to FFFF hex (1 to 65,535 Hz)	
		S1+2 (lower 4 digits)	Target Frequency in Hz Pulse output 0 or 1: 0000 0000 to 0001 86A0 hex (0 to 100 kHz)	
		S1+3 (upper 4 digits)		
		S1+4 (lower 4 digits)	Number of Pulses • Relative pulses: 0000 0000 to 7FFF FFFF hex (0 to 2,147,489,647) • Absolute pulses: 8000 0000 to 7FFF FFFF hex (–2,147,489,648 to 2,147,489,647)	
		S1+5 (upper 4 digits)		

Operand			Description
F	First word of starting frequency	F (lower 4 digits)	Starting Frequency in Hz Pulse output 0 or 1: 0000 0000 to 0001 86A0 hex (0 to 100 kHz)
		F+1 (upper 4 digits)	

ORIGIN SEARCH: ORG(889)

ORG(889) performs an origin search or origin return operation.

- Origin Search:
  Pulses are output to establish the origin based on origin proximity input and origin input signals.
- Origin Return:
  The positioning system is returned to the origin.

The parameters for pulse output 0 or pulse output 1 must be set in advance in the PLC Setup to perform either an origin search or origin return operation.

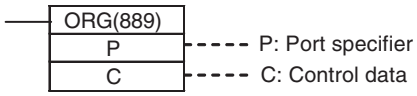

Operand			Description
P	Port specifier		0020 hex: Inverter positioning 0 0021 hex: Inverter positioning 1
C	Control data	Bits 0 to 3	Not used: Always set to 0 hex
		Bits 4 to 7	Not used: Always set to 0 hex
		Bits 8 to 11	Not used: Always set to 0 hex
		Bits 9 to 15	Mode 0 hex: Origin search 1 hex: Origin return

MODE CONTROL: INI(880)

INI(880) changes the present value of inverter positioning or stops positioning.

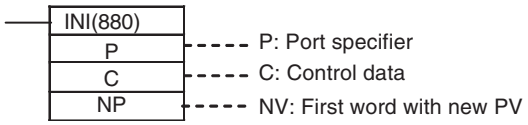

Operand			Description
P	Port specifier		0020 hex: Inverter positioning 0 0021 hex: Inverter positioning 1
C	Control data		0002 hex: Changes the PV of the internal pulse output. 0003 hex: Stops internal pulse output. Positioning will continue and the output value will not be cleared. 0004 hex: Stops inverter positioning. Internal pulse output will be stopped, positioning will be stopped, and the output value will be cleared. The next operation will not be accepted until the error counter is cleared.
NP	First word with new PV	NP (lower 4 digits)	New PV 0000 0000 to FFFF FFFF hex
		NP+1 (upper 4 digits)	

HIGH-SPEED COUNTER PV READ: PRV(881)

PRV(881) is used to read the present value and status of inverter positioning. The following status can be read.

- Operation Command Flag
- Forward Command Flag
- Reverse Command Flag
- In-position Flag
- Internal Pulse Output Flag
- Internal Pulse Acceleration/ Deceleration Flag
- Error Counter Error Flag
- Error Counter Alarm Flag
- Error Counter Sign Flag

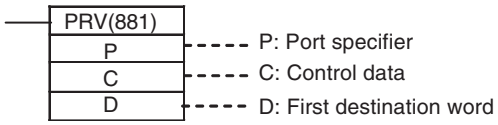

Operand		Description
P	Port specifier	0020 hex: Inverter positioning 0 0021 hex: Inverter positioning 1 0030 hex: Error counter 0 0031 hex: Error counter 1
C	Control data	0000 hex: Read present value. 0001 hex: Read status.

Operand			Description	
D	First destination word for present value	D	Lower 4 digits	When a present value is read, the following data is stored in D and D+1 as an 8-digit hexadecimal value. P = #0020/#0021: The actual movement from the internal pulse origin. P = #0030/#0031: The present value of the error counter.
		D+1	Upper 4 digits	
	Destination word for inverter positioning status (P = #0020 or #0021)	D	Bit 0	Operation Command Flag ON: Operation command in progress OFF: Stopped
			Bit 1	Forward Command Flag ON: Forward command in progress OFF: Reverse command in progress or stopped
			Bit 2	Reverse Command Flag ON: Reverse command in progress OFF: Forward command in progress or stopped
			Bit 3	In-position Flag ON: In position OFF: Not in position
			Bit 4	Error Counter Error Flag ON: Error occurred in error counter OFF: No error
			Bit 5	Internal Pulse Output Flag ON: Pulses being output OFF: Pulse output stopped
			Bit 6	Internal Pulse Acceleration/Deceleration Flag ON: Acceleration/deceleration in progress for internal pulse output (i.e., frequency being changed) OFF: Constant frequency for internal pulse output
			Bit 7	Error Counter Alarm Flag ON: Alarm occurred for error counter OFF: No alarm
			Bit 15	Error Counter Sign Flag ON: Positive OFF: Negative

5-3-7 Determining the Internal Pulse Output Frequency

Use the following formula to calculate the internal pulse frequency (Hz) to output from the pulse output instruction (e.g., PLS2) based on the power supply frequency (Hz) to be output from the inverter to the motor.

$$\text{Frequency of internal pulse output (Hz)} = \frac{\text{Encoder resolution (pulses/revolution)} \times \text{High-speed counter multiplier} \times \text{Gear ratio between motor shaft and encoder shaft (See note 2.)}}{\text{Power supply frequency to motor for one revolution per second (See note 1.)}} \times \text{Power supply frequency to motor (Hz)}$$

Note (1) Calculate the power supply frequency for one revolution per second from the motor specifications. For example, with a 1,800-r/min (60-Hz) motor (30 r/s), the power supply frequency for one revolution per second would be calculated as follows: 60 [Hz] ÷ 30 [r/s] = 2 [Hz].

(2) The encoder resolution times the counter multiplier times the gear ratio equals the number of pulses output by the encoder for one motor shaft revolution.

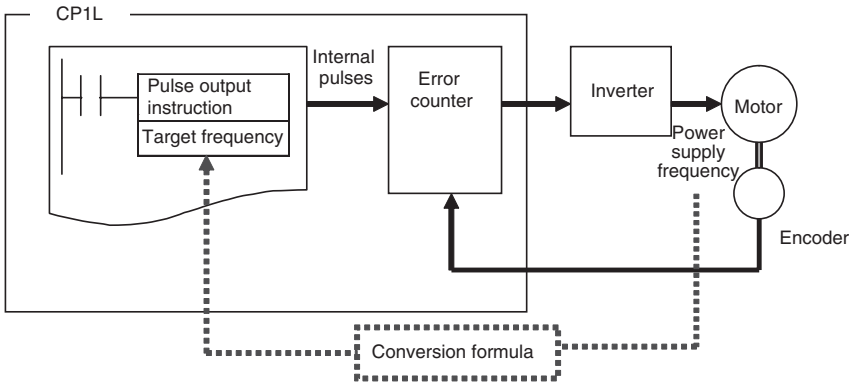

Example of Calculating Conversion Factor

Conditions

- Frequency for 1 revolution/s for inductive motor: 2 Hz (motor specification)
- Rotary encoder resolution: 1,000 pulses/revolution (encoder specification)
- High-speed counter multiplier: x4 (PLC Setup)
- Gear ratio between motor and encoder shafts: 1/4 (machine specification)

Calculations

The factor goes into the formula as shown below.

$$\text{Frequency of internal pulse output (Hz)} = \frac{1000 \times 4 \times 1/4}{2} \times \text{Power supply frequency to motor (Hz)}$$

$$= 500 \times \text{Power supply frequency to motor (Hz)}$$

For example, to output a power supply frequency of 10 Hz to the motor:

Frequency of internal pulse output = 500 × 10 Hz = 5,000 Hz = 5 kHz

Therefore, set a pulse output frequency of 5 kHz in the pulse output instructions (e.g., PLS2).

5-3-8 PLC Setup

The following settings must be made in advance when using inverter positioning 0 or 1.

Basic Settings

The following settings are required to use inverter positioning.

Inverter Positioning Function

Setting	Description	Set value	Default	Application	Refresh timing
Use inverter positioning	Select this option to use inverter positioning. High-speed counter 0 will be allocated to inverter positioning 0 and high-speed counter 1 will be allocated to inverter positioning 1. The high-speed counter mode that is set will be used. **Note** If inverter positioning 1 is used with a CPU Unit with 14 I/O Points, origin searches cannot be used. (Origin searches are possible even if inverter positioning 0 is used.)	Use/Do not use	Do not use	---	When CPU Unit power is turned ON

Gain

Setting	Description	Set value	Default	Application	Refresh timing
Gain	The error counter present value times the gain setting will be used as the output command to the inverter. 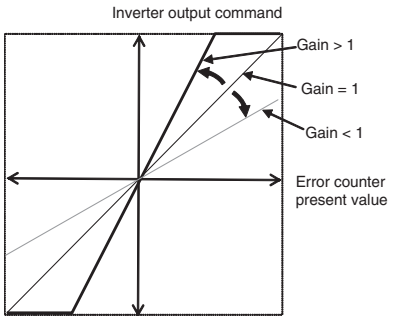 **Note** The setting is made in increments of 0.1. The gain will thus be 1/10 of the set value. For example, if 50 is set, the gain will be 5. It's best to initially try a gain of from 5 to 10 (settings of 50 to 100) and then adjust from there.	1 to 65,535 (0.1 increments) 0 sets a value of 10 (0.1 increments)	0: 10 (0.1 increments) This will set a gain of 1.	Adjusting the following characteristic of the motor	When CPU Unit power is turned ON

In-position Range

Setting	Description	Set value	Default	Application	Refresh timing
In-position range	The In-position Flag (A26.03) will turn ON when pulse output to the error counter has been completed and the error counter present value is less equal to or less than the in-position range. 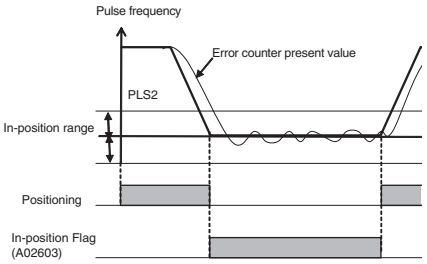	1 to 65,535 Setting 0 is the same as setting 1.	0: 1	When using the inverter's servo lock, the command value to the inverter is set to zero during in-position status.	When CPU Unit power is turned ON

Minimum Output Value

Setting	Description	Set value	Default	Application	Refresh timing
Min. output value	If the error counter present value times the gain setting is less than the minimum output value, the minimum output value will be output. Set the minimum output value so that it is equal to or smaller than the maximum output value. 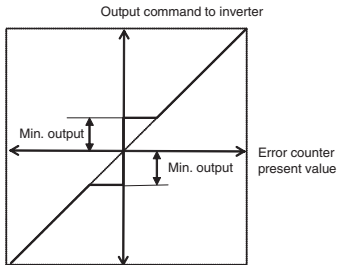	1 to 65,535 Setting 0 is the same as setting 1.	0: 1	A minimum output value can be set to ensure an output of a specified size even when the error counter present value is very small.	When CPU Unit power is turned ON

Maximum Output Value

Setting	Description	Set value	Default	Application	Refresh timing
Max. output value	If the error counter present value times the gain setting is greater than the maximum output value, the maximum output value will be output. Set the maximum output value so that it is equal to or greater than the minimum output value. 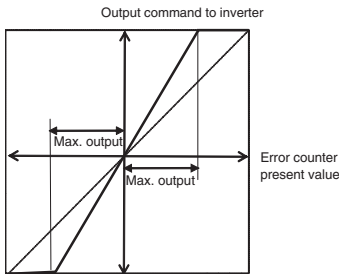	1 to 4,294,967,295 Setting 0 is the same as setting 2,000,000.	0: 2,000,000	A maximum output value can be set to prevent the output value from becoming too large.	When CPU Unit power is turned ON

Error Counter Overflow Detection Value

Setting	Description	Set value	Default	Application	Refresh timing
Error counter overflow detection value	If the absolute value of the error counter present value is greater than the error counter overflow detection value, the Error Counter Error Flag (A26.03) will turn ON.	1 to 32,767 Setting 0 is the same as setting 10,000.	0: 10,000	Provides notification of excessive pulses in the error counter, e.g., when manually moving the motor shaft while positioning is stopped.	When CPU Unit power is turned ON

Error Counter Alarm Detection Value

Setting	Description	Set value	Default	Application	Refresh timing
Error counter alarm detection value	If the absolute value of the error counter present value is greater than the error counter alarm detection value, the Error Counter Alarm Flag (A26.08) will turn ON.	1 to 32,767 Setting 0 is the same as setting 10,000.	0: 10,000	Provides notification of excessive pulses in the error counter, e.g., when encoder wiring breaks during positioning.	When CPU Unit power is turned ON

Error Counter Cycle

Setting	Description	Set value	Default	Application	Refresh timing
Error counter cycle	The calculation cycle of the error counter can be set. If the cycle is too short when using a motor with a slow response, pulses may easily accumulate in the error counter. Change the error counter cycle according to the machine load and motor response. **Note** The setting is made in increments of 4 ms. The error counter cycle will thus be the set value times 4 ms. For example, if the set value is 10, the error counter cycle will be 40 ms.	1 to 255 (in 4-ms increments) Setting 0 is the same as setting 3 (4-ms increments)	0: 3 (4-ms increments) The error counter cycle will be 12 ms.	Set when using a motor with a slow response.	When CPU Unit power is turned ON

Power Supply Frequency for One Motor Revolution per Second

Setting	Description	Set value	Default	Application	Refresh timing
Power Supply Freq. for One Motor Revolution per Sec.	Calculate the power supply frequency for one revolution per second from the motor specifications. For example, with a 1,800-r/min (60-Hz) motor (30 r/s), the power supply frequency for one revolution per second would be calculated as follows: 60 [Hz] ÷ 30 [r/s] = 2 [Hz]. **Note** The setting is made in increments of 0.1 Hz. The frequency will thus be the set value times 0.1 Hz. For example, if the set value is 20, the frequency will be 2 Hz.	0 to 65,535 Hz (0.1-Hz increments)	0 (0.1-Hz increments)	This setting is used when converting the output value to an inverter frequency command.	When CPU Unit power is turned ON

Number of Encoder Pulses for One Motor Revolution

Setting	Description	Set value	Default	Application	Refresh timing
Number of Encoder Pulses for One Motor Revolution	Calculate the number of encoder pulses for one motor revolution from the encoder resolution (pulses/revolution), high-speed counter's multiplier, and motor-encoder shaft gear ratio. For example, if the encoder resolution is 1,000, the high-speed counter multiplier is 4, and the gear ratio is 1/4, the number of encoder pulses for one motor revolution is 1,000 × 4 × (1/4) = 1,000.	0 to 65,535	0	This setting is used when converting the output value to an inverter frequency command.	When CPU Unit power is turned ON

Operation Adjustment Settings

Use the following settings if the gain adjustment in the basic settings does not produce stable operation.

Limit Output during Acceleration and Constant Speed

Setting	Description	Set value	Default	Application	Refresh timing
Limit output during acceleration and constant speed	Select this option to limit the upper and lower values of the output value based on the pulse output value during internal pulse output acceleration or constant speed.	Use/Do not use	Do not use	Use this setting when positioning precision is bad.	When CPU Unit power is turned ON

Limit Output during Deceleration and When Stopped

Setting	Description	Set value	Default	Application	Refresh timing
Limit output during deceleration and when stopped	Select this option to multiply the error of the output value by a coefficient during internal pulse output deceleration or after output has been completed.	Use/Do not use	Do not use	Use this setting when positioning precision is bad.	When CPU Unit power is turned ON

Output Coefficient during Acceleration and Constant Speed

Setting	Description	Set value	Default	Application	Refresh timing
Output coefficient during acceleration and constant speed	Upper and lower limits are placed on the output value by multiplying the pulse output value by a coefficient during internal pulse output acceleration or constant speed. Output Upper Limit = Internal pulse output value + Internal pulse output value × Output coefficient Output Lower Limit = Internal pulse output value − Internal pulse output value × Output coefficient 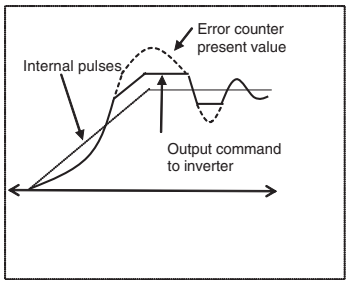 **Note** The setting is made in increments of 0.01. The coefficient will thus be the set value times 0.01. For example, if the set value is 10, the coefficient will be 0.1 ms.	1 to 255 (0.01 increments) Setting 0 is the same as setting 6 (0.01 increments).	0: 6 (0.01 increments)	This coefficient can be used to restrict the output range to prevent excessive values, based on the internal pulse output value when the motor response is slow even if a large error is produced.	When CPU Unit power is turned ON

Output Coefficient during Deceleration

Setting	Description	Set value	Default	Application	Refresh timing
Output coefficient during deceleration	The output value can be changed by multiplying the value in the error counter by a coefficient during deceleration of internal pulse output. Output value = Error × Error counter cycle (s) × Gain × Coefficient **Note** The setting is made in increments of 0.01. The coefficient will thus be the set value times 0.01. For example, if the set value is 10, the coefficient will be 0.1 ms.	1 to 255 (0.01 increments) Setting 0 is the same as setting 96 (0.01 increments).	0: 96 (0.01 increments)	This coefficient can be used to reduce the output value when the motor response is slow and the target position is exceeded when stopping.	When CPU Unit power is turned ON

Output Coefficient after Pulse Output

Setting	Description	Set value	Default	Application	Refresh timing
Output coefficient after pulse output	The output value can be changed by multiplying the value in the error counter by a coefficient after deceleration of internal pulse output. Output value = Error × Error counter cycle (s) × Gain × Coefficient **Note** The setting is made in increments of 0.01. The coefficient will thus be the set value times 0.01. For example, if the set value is 10, the coefficient will be 0.1 ms.	1 to 255 (0.01 increments) Setting 0 is the same as setting 50 (0.01 increments).	0: 50 (0.01 increments)	This coefficient can be used to reduce the output value when it the value in the error counter is too large after completing internal pulse output.	When CPU Unit power is turned ON

5-3-9 Automatic Calculation of Inverter Frequency Command Value

Set the Power Supply Frequency for One Motor Revolution per Second, Number of Encoder Pulses for One Motor Revolution, and Error Counter Cycle in the PLC Setup to automatically calculate the inverter frequency command value and store it in A23 for inverter positioning 0 and A33 for inverter positioning 1.

Note The inverter frequency command values are stored in A23 and A33 in increments of 0.01 Hz. Divide the value in A23 or A33 by 100 to obtain the value in hertz.

The values stored in A23 and A33 can be used in converting the output value to the frequency command value for the inverter. This value can be output to the inverter from the program using serial communications or an Analog Output Unit.

Note The following formula is used inside the PLC to automatically calculate the inverter frequency command value from the output value (i.e., the error counter present value multiplied by the gain). (The output value is stored in A20 and A21 for inverter positioning 0 and in A30 and A31 for inverter positioning 1.)

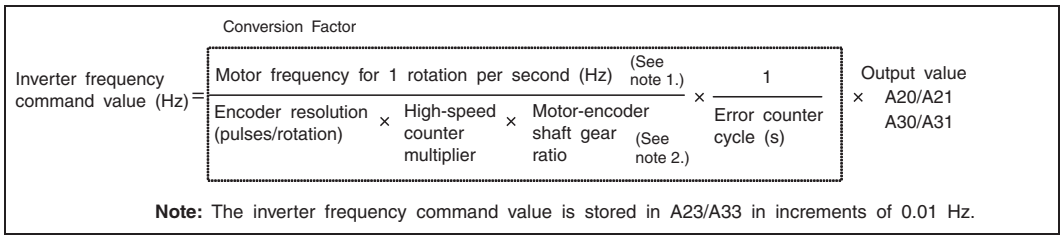

Note: The inverter frequency command value is stored in A23/A33 in increments of 0.01 Hz.

Note

(1) Calculate the power supply frequency for one revolution per second from the motor specifications. For example, with a 1,800-r/min (60-Hz) motor (30 r/s), the power supply frequency for one revolution per second would be calculated as follows: 60 [Hz] ÷ 30 [r/s] = 2 [Hz].

(2) The encoder resolution times the counter multiplier times the gear ratio equals the number of pulses output by the encoder for one motor shaft revolution.

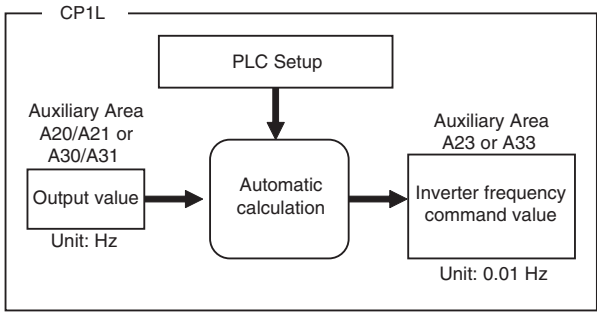

Example of Calculating Conversion Factor

Conditions

- Power Supply Frequency for One Motor Revolution per Second: 2 Hz (PLC Setup)
- Number of Encoder Pulses for One Motor Revolution: 1,000 (PLC Setup)
  - Rotary encoder resolution: 1,000 pulses/revolution (encoder specification)
  - High-speed counter multiplier: x4 (PLC Setup)
  - Gear ratio between motor and encoder shafts: 1/4 (machine specification)
- Error Counter Cycle: 12 ms (PLC Setup)

Calculation

The calculation performed inside the PLC is as shown below.

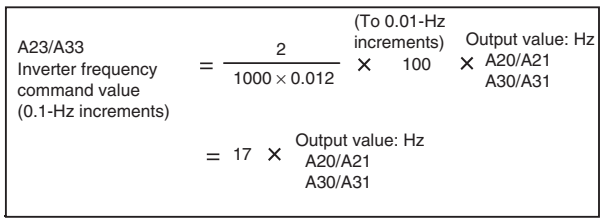

Serial Communications

The command value calculated above is used in the Modbus-RTU command frame, adjusting for the frequency unit. (See note.)

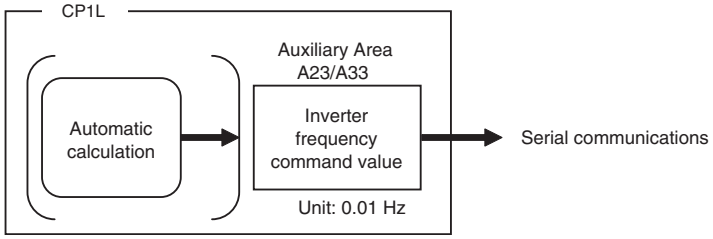

Refer to *6-3-3 Modbus-RTU Easy Master Function* and to the inverter manual for details on Modbus-RTU communications.

Note If the frequency command unit set in the inverter is 0.1 Hz, divide the command frequency in A23 or A33 by 10.

Analog Output

The following example is for the CP1W-DA041/CP1W-DA021.

The analog output resolution is 6,000, so the command value calculated above is multiplied by 6,000 divided by the inverter's maximum output frequency.

$$\text{Stored analog output value} = \text{Inverter frequency command value (Hz)} \times \frac{6{,}000}{\text{Inverter's max. output frequency (Hz)}}$$

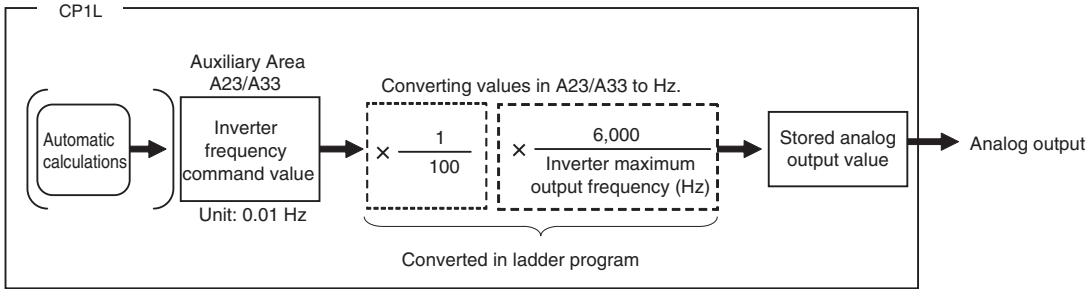

Refer to *7-3 Analog Output Units* for operating procedures for the Analog Output Unit.

■ Calculation Example

Conditions

Inverter's maximum output frequency: 60 Hz

Calculation

The stored analog output value is calculated as follows:

$$\text{Stored analog output value} = \left[\begin{array}{l}\text{Auxiliary Area}\\ \text{A23/A33}\\ \text{(Unit: 0.01 Hz)}\end{array}\right] \times \frac{1}{100} \times \frac{6{,}000}{60}$$

$$= \left[\begin{array}{l}\text{Auxiliary Area}\\ \text{A23/A33}\\ \text{(Unit: 0.01 Hz)}\end{array}\right] \times 1$$

5-3-10 Memory Allocations

Built-in Input Area

Input terminal block		Default	Pulse output origin searches enabled	Inverter positioning enabled
Word	**Bit**	**Normal inputs**	**Origin search**	
CIO 0 (See note 1.)	00	Normal input 0	---	High-speed counter 0: Phase A
	01	Normal input 1	---	High-speed counter 0: Phase B
	02	Normal input 2	Pulse output 0: Origin proximity input signal (CPU Units with 14 I/O (See note 3.))	High-speed counter 1: Phase A
	03	Normal input 3	Pulse output 1: Origin proximity input signal (CPU Units with 14 I/O (See note 3.)) Pulse output 0: Origin proximity input signal (CPU Units with 10 I/O (See note 3.))	High-speed counter 1: Phase B
	04	Normal input 4	---	---
	05	Normal input 5	Pulse output 0: Origin input signal (CPU Units with 10 I/O (See note 3.))	---
	06(See note 2.)	Normal input 6	Pulse output 0: Origin input signal	---
	07(See note 2.)	Normal input 7	Pulse output 1: Origin input signal	---
	08 (See note 2.)	Normal input 8	---	---
	09 (See note 2.)	Normal input 9	---	---
	10 (See note 2.)	Normal input 10	Pulse output 0: Origin proximity input signal (CPU Units with 20, 30,40 or 60 I/O)	---
	11 (See note 2.)	Normal input 11	Pulse output 1: Origin proximity input signal (CPU Units with 20, 30,40 or 60 I/O)	---

Note

(1) The above table shows only allocations related to inverter positioning.

(2) Bits 08 to 11 are not supported by CPU Units with 14 I/O Points. Bits 06 to 11 are not supported by CPU Units with 10 I/O Points.

(3) If inverter positioning 1 is used with a CPU Unit with 14 I/O Points, origin searches (i.e., the origin proximity input signal) cannot be used.

Built-in Output Area

This area is not used for inverter positioning.

When inverter positioning is enabled, bits 00 to 03 in CIO 100 can be used as normal outputs 0 to 3. The corresponding pulse output and PWM output cannot be used.

Auxiliary Area

Read Area

■ Inverter Positioning 0

Use one of the following for the inverter frequency command.

Word	Bits	Function	Data range	Refresh timing	Application examples
A20	00 to 15	Lower 4 digits of present value of unsigned output value (output value = present value of error counter × error counter cycle (s) × gain) **Note** The maximum and minimum output values are applied.	0000 0000 to 8000 0000 hex (0 to 2,147,483,648)	Cleared to zero at following times: • When power to CPU Unit is turned ON • At start of operation • When an error counter error occurs Updated at following times: • Cyclically according to error counter cycle	This value can be used when not using automatic frequency command calculations and instead to convert the output value provided here in the user program for output to the inverter. This value is used when signed data is not required, i.e., when using communications or normal I/O to specify the direction.
A21	00 to 15	Upper 4 digits of present value of unsigned output value (output value = present value of error counter × error counter cycle (s) × gain) **Note** The maximum and minimum output values are applied.			

Word	Bits	Function	Data range	Refresh timing	Application examples
A23	00 to 15	Inverter frequency command value (0.01-Hz increments, unsigned) **Note** Set the Power Supply Frequency for One Motor Revolution per Second, Number of Encoder Pulses for One Motor Revolution, and Error Counter Cycle in the PLC Setup before using this value.	0000 to FFFF hex (0.00 to 655.35 Hz)	Cleared to zero at following times: • When power to CPU Unit is turned ON • At start of operation • When an error counter error occurs Updated at following times: Cyclically according to error counter cycle	These words contain the automatically calculated frequency command value for the inverter. (This value is normally used.) For example, if the frequency setting unit of the inverter is 0.01 Hz, this value can be used as it in serial communications with the inverter. When converting to an analog output (0 to 5 V, 1 to 5 V, 0 to 10 V, 0 to 20 mA, or 4 to 20 mA), this value can be used to simplify the conversion. This value is used when signed data is not required, i.e., when using communications or normal I/O to specify the direction.
A24	00 to 15	Lower 4 digits of present value of signed output value (output value = present value of error counter × error counter cycle (s) × gain) **Note** The maximum and minimum output values are applied.	8000 0000 to 7FFF FFFF hex (–214,748,348 to 214,748,347)	Cleared to zero at following times: • When power to CPU Unit is turned ON • At start of operation • When an error counter error occurs Updated at following times: • Cyclically according to error counter cycle	This value can be used when not using automatic frequency command calculations and instead to convert the output value provided here in the user program for output to the inverter. This value is used when signed data is required, i.e., when outputting the frequency command with an analog output from –10 to 10 V.
A25	00 to 15	Upper 4 digits of present value of signed output value (output value = present value of error counter × error counter cycle (s) × gain) **Note** The maximum and minimum output values are applied.			

Use the following for inverter positioning status and the workpiece position.

Word	Bits	Function	Data range	Refresh timing	Application examples
A26	00	Operation Command Flag	ON: Operation command executed. OFF: Stop command executed.	Turned ON at following times: • When inverter positioning is started Turned OFF at following times: • When power to CPU Unit is turned ON • At start of operation • When CPU Unit operation stops • When inverter positioning is stopped using INI instruction	This flag is used as a NO input condition when calculating the frequency command value in the user program. It is also used as a NC input condition when clearing the frequency command value to zero.
	01	Forward Operation Command Flag	ON: Forward command in progress OFF: Reverse command in progress or stopped	Turned ON at following times: • When error counter present value is greater than 0 (i.e., positive) Turned OFF at following times: • When error counter present value is less than 0 (i.e., negative) or zero • When power to CPU Unit is turned ON • When CPU Unit operation starts • When CPU Unit operation stops	This flag is used as a NO input condition when outputting a forward operation command to the inverter from the user program It is also used as a NC input condition when outputting a reverse command to the inverter.
	02	Reverse Operation Command Flag	ON: Reverse command in progress OFF: Forward command in progress or stopped	Turned ON at following times: • When error counter present value is less than 0 (i.e., negative) Turned OFF at following times: • When error counter present value is greater than 0 (i.e., positive) or zero • When power to CPU Unit is turned ON • When CPU Unit operation starts • When CPU Unit operation stops	This flag is used as a NO input condition when outputting a reverse operation command to the inverter from the user program It is also used as a NC input condition when outputting a forward command to the inverter.

Word	Bits	Function	Data range	Refresh timing	Application examples
A26	03	In-position Flag	ON: In position OFF: Not in position	Turned ON at following times: • When pulse output to error counter is stopped and absolute value of error counter present value is less than in-position range Turned OFF at following times: • When pulses are being output to error counter • When absolute value of error counter present value is greater than in-position range. • When power to CPU Unit is turned ON • When CPU Unit operation starts • When CPU Unit operation stops	This flag is used as an NO condition when clearing the frequency command value to zero from the user program.
	04	Error Counter Error Flag	ON: Error counter error OFF: No error	Turned ON at following times: • When pulse output to error counter is stopped and absolute value of error counter present value is greater than or equal to error counter error detection value Turned OFF at following times: • When error counter error is reset • When power to CPU Unit is turned ON • When CPU Unit operation starts • When CPU Unit operation stops	This flag can be used to provide notification of excessive pulses in the error counter, e.g., when manually moving the motor shaft while positioning is stopped.
	05	Error Counter Pulse Output Flag	ON: Pulses being output OFF: Pulse output stopped	Turned ON at following times: • When pulse output to error counter is started Turned OFF at following times: • When pulse output to error counter is stopped (including immediate stops and deceleration stops) • When power to CPU Unit is turned ON • When CPU Unit operation starts • When CPU Unit operation stops	This flag is used to determine whether pulses are being output to the error counter. This flag can be used to determine when internal pulse output has been completed and start the next instruction.
	06	Error Counter Pulse Output Acceleration/ Deceleration Flag	ON: Pulse output to the error counter is accelerating or decelerating (i.e., the frequency is changing) OFF: Pulse output to the error counter is constant	Turned ON at following times: • When pulse output frequency to error counter is changed by ACC or PLS2 instruction Turned OFF at following times: • During output of a constant pulse frequency to error counter • When pulse output to error counter is stopped (including immediate stops and deceleration stops) • When power to CPU Unit is turned ON • When CPU Unit operation starts • When CPU Unit operation stops	This flag is used to detect changes in the output frequency when the frequency is changed stepwise for internal pulses are being output by the ACC or PLS2 instruction. It can be used as a condition for executing ACC or PLS2 during internal pulse output.

Word	Bits	Function	Data range	Refresh timing	Application examples
A26	07	Error Counter Alarm Flag	ON: Error counter alarm OFF: No error counter alarm	Turned ON at following times: • When pulse output to error counter is stopped and absolute value of error counter present value is greater than or equal to error counter alarm detection value Turned OFF at following times: • When error counter alarm is reset • When power to CPU Unit is turned ON • When CPU Unit operation starts • When CPU Unit operation stops	This flag can be used to provide notification of excessive pulses in the error counter, e.g., when encoder wiring breaks during positioning.
	08 to 14	Not used.			
	15	Inverter Positioning Output Value Sign Flag	ON: Positive value OFF: Negative value	Turned ON at following times: • When signed output value is between 0000 0000 and 7FFF FFFF hex. Turned OFF at following times: • When signed output value is between FFFF FFFF and 8000 0000 hex.	This flag can be used as a direction signal
A270	00 to 15	Lower 4 digits of high-speed counter present value	8000 000 to 7FFF FFFF hex (–2,147,483,648 to 2,147,483,647)	The present value of the feedback pulse from the encoder. Operation is the same as for a high-speed counter.	Use as the absolute position of the workpiece positioned with inverter positioning.
A271	00 to 15	Upper 4 digits of high-speed counter present value			

Use the following for the present values of the internal pulse and error counter of inverter positioning.

Word	Bits	Function	Data range	Refresh timing	Application examples
A22	00 to 15	Error counter 0 present value (signed)	8000 to 7FFF hex (–32,768 to 32,767)	Cleared to zero at following times: • When power to CPU Unit is turned ON • At start of operation • When an error counter error occurs Updated at following times: • Cyclically according to error counter cycle Held at following times: • When Error Counter Disable Bit (A562.01) is turned ON.	Use to monitor the difference between the target value and the present value.
A28	00 to 15	Lower 4 digits of present value of pulse output to inverter (relative value)	8000 0000 to 7FFF FFFF hex (–2,147,483,648 to 2,147,483,647)	Contains relative internal pulse output value when pulses are output to error counter. Cleared to zero at following times: • When power to CPU Unit is turned ON • When operation is started • When pulse output to error counter is started Updated at following times: • Cyclically on error counter cycle	These values can be used to monitor the present value of internal pulse output.
A29	00 to 15	Upper 4 digits of present value of pulse output to inverter (relative value)			

Word	Bits	Function	Data range	Refresh timing	Application examples
A276	00 to 15	Lower 4 digits of the present value of the internal pulse output (absolute value for absolute coordinates)	8000 0000 to 7FFF FFFF hex (–2,147,483,648 to 2,147,483,647)	Contains absolute movement value from the internal pulse origin when pulses are output to error counter. Cleared to zero at following times: • When power to CPU Unit is turned ON • When operation is started Updated at following times: • Cyclically on error counter cycle	This value can be used to monitor the present value of the internal pulse output as an absolute value when using absolute coordinates.
A277	00 to 15	Upper 4 digits of the present value of the internal pulse output (absolute value for absolute coordinates)			

■ Inverter Positioning 1

Use one of the following for the inverter frequency command.

Word	Bits	Function	Data range	Refresh timing	Application examples
A30	00 to 15	Lower 4 digits of present value of unsigned output value (output value = present value of error counter × error counter cycle (s) × gain) **Note** The maximum and minimum output values are applied.	0000 0000 to 8000 0000 hex (0 to 2,147,483,648)	Cleared to zero at following times: • When power to CPU Unit is turned ON • At start of operation • When an error counter error occurs Updated at following times: • Cyclically according to error counter cycle	This value can be used when not using automatic frequency command calculations and instead to convert the output value provided here in the user program for output to the inverter. This value is used when signed data is not required, i.e., when using communications or normal I/O to specify the direction.
A31	00 to 15	Upper 4 digits of present value of unsigned output value (output value = present value of error counter × error counter cycle (s) × gain) **Note** The maximum and minimum output values are applied.			

Word	Bits	Function	Data range	Refresh timing	Application examples
A33	00 to 15	Inverter frequency command value (0.01-Hz increments, unsigned) **Note** Set the Power Supply Frequency for One Motor Revolution per Second, Number of Encoder Pulses for One Motor Revolution, and Error Counter Cycle in the PLC Setup before using this value.	0000 to FFFF hex (0.00 to 655.35 Hz)	Cleared to zero at following times: • When power to CPU Unit is turned ON • At start of operation • When an error counter error occurs Updated at following times: Cyclically according to error counter cycle	These words contain the automatically calculated frequency command value for the inverter. (This value is normally used.) For example, if the frequency setting unit of the inverter is 0.01 Hz, this value can be used as it in serial communications with the inverter. When converting to an analog output (0 to 5 V, 1 to 5 V, 0 to 10 V, 0 to 20 mA, or 4 to 20 mA), this value can be used to simplify the conversion. This value is used when signed data is not required, i.e., when using communications or normal I/O to specify the direction.
A34	00 to 15	Lower 4 digits of present value of signed output value (output value = present value of error counter × error counter cycle (s) × gain) **Note** The maximum and minimum output values are applied.	8000 0000 to 7FFF FFFF hex (–214,748,348 to 214,748,347)	Cleared to zero at following times: • When power to CPU Unit is turned ON • At start of operation • When an error counter error occurs Updated at following times: • Cyclically according to error counter cycle	This value can be used when not using automatic frequency command calculations and instead to convert the output value provided here in the user program for output to the inverter. This value is used when signed data is required, i.e., when outputting the frequency command with an analog output from –10 to 10 V.
A35	00 to 15	Upper 4 digits of present value of signed output value (output value = present value of error counter × error counter cycle (s) × gain) **Note** The maximum and minimum output values are applied.			

Use the following for inverter positioning status and the workpiece position.

Word	Bits	Function	Data range	Refresh timing	Application examples
A36	00	Operation Command Flag	ON: Operation command executed. OFF: Stop command executed.	Turned ON at following times: • When inverter positioning is started Turned OFF at following times: • When power to CPU Unit is turned ON • At start of operation • When CPU Unit operation stops • When inverter positioning is stopped using INI instruction	This flag is used as a NO input condition when calculating the frequency command value in the user program. It is also used as a NC input condition when clearing the frequency command value to zero.
	01	Forward Operation Command Flag	ON: Forward command in progress OFF: Reverse command in progress or stopped	Turned ON at following times: • When error counter present value is greater than 0 (i.e., positive) Turned OFF at following times: • When error counter present value is less than 0 (i.e., negative) or zero • When power to CPU Unit is turned ON • When CPU Unit operation starts • When CPU Unit operation stops	This flag is used as a NO input condition when outputting a forward operation command to the inverter from the user program It is also used as a NC input condition when outputting a reverse command to the inverter.
	02	Reverse Operation Command Flag	ON: Reverse command in progress OFF: Forward command in progress or stopped	Turned ON at following times: • When error counter present value is less than 0 (i.e., negative) Turned OFF at following times: • When error counter present value is greater than 0 (i.e., positive) or zero • When power to CPU Unit is turned ON • When CPU Unit operation starts • When CPU Unit operation stops	This flag is used as a NO input condition when outputting a reverse operation command to the inverter from the user program It is also used as a NC input condition when outputting a forward command to the inverter.

Word	Bits	Function	Data range	Refresh timing	Application examples
A36	03	In-position Flag	ON: In position OFF: Not in position	Turned ON at following times: • When pulse output to error counter is stopped and absolute value of error counter present value is less than in-position range Turned OFF at following times: • When pulses are being output to error counter • When absolute value of error counter present value is greater than in-position range. • When power to CPU Unit is turned ON • When CPU Unit operation starts • When CPU Unit operation stops	This flag is used as an NO condition when clearing the frequency command value to zero from the user program.
	04	Error Counter Error Flag	ON: Error counter error OFF: No error	Turned ON at following times: • When pulse output to error counter is stopped and absolute value of error counter present value is greater than or equal to error counter error detection value Turned OFF at following times: • When error counter error is reset • When power to CPU Unit is turned ON • When CPU Unit operation starts • When CPU Unit operation stops	This flag can be used to provide notification of excessive pulses in the error counter, e.g., when manually moving the motor shaft while positioning is stopped.
	05	Error Counter Pulse Output Flag	ON: Pulses being output OFF: Pulse output stopped	Turned ON at following times: • When pulse output to error counter is started Turned OFF at following times: • When pulse output to error counter is stopped (including immediate stops and deceleration stops) • When power to CPU Unit is turned ON • When CPU Unit operation starts • When CPU Unit operation stops	This flag is used to determine whether pulses are being output to the error counter. This flag can be used to determine when internal pulse output has been completed and start the next instruction.
	06	Error Counter Pulse Output Acceleration/ Deceleration Flag	ON: Pulse output to the error counter is accelerating or decelerating (i.e., the frequency is changing) OFF: Pulse output to the error counter is constant	Turned ON at following times: • When pulse output frequency to error counter is changed by ACC or PLS2 instruction Turned OFF at following times: • During output of a constant pulse frequency to error counter • When pulse output to error counter is stopped (including immediate stops and deceleration stops) • When power to CPU Unit is turned ON • When CPU Unit operation starts • When CPU Unit operation stops	This flag is used to detect changes in the output frequency when the frequency is changed stepwise for internal pulses are being output by the ACC or PLS2 instruction. It can be used as a condition for executing ACC or PLS2 during internal pulse output.

Word	Bits	Function	Data range	Refresh timing	Application examples
A36	07	Error Counter Alarm Flag	ON: Error counter alarm OFF: No error counter alarm	Turned ON at following times: • When pulse output to error counter is stopped and absolute value of error counter present value is greater than or equal to error counter alarm detection value Turned OFF at following times: • When error counter alarm is reset • When power to CPU Unit is turned ON • When CPU Unit operation starts • When CPU Unit operation stops	This flag can be used to provide notification of excessive pulses in the error counter, e.g., when encoder wiring breaks during positioning.
	08 to 14	Not used.			
	15	Inverter Positioning Output Value Sign Flag	ON: OFF:	Turned ON at following times: • When signed output value is between 0000 0000 and 7FFF FFFF hex. Turned OFF at following times: • When signed output value is between FFFF FFFF and 8000 0000 hex.	This flag can be used as a direction signal.
A272	00 to 15	Lower 4 digits of the present value of the internal pulse output (absolute value for absolute coordinates)	8000 0000 to 7FFF FFFF hex (–2,147,483,648 to 2,147,483,647)	Contains absolute movement value when pulses are output to error counter. Cleared to zero at following times: • When power to CPU Unit is turned ON • When operation is started Updated at following times: • Cyclically on error counter cycle	This value can be used to monitor the present value of the internal pulse output as an absolute value when using absolute coordinates.
A273	00 to 15	Upper 4 digits of the present value of the internal pulse output (absolute value for absolute coordinates)			

Use the following for the present values of the internal pulse and error counter of inverter positioning.

Word	Bits	Function	Data range	Refresh timing	Application examples
A32	00 to 15	Error counter 0 present value (signed)	8000 to 7FFF hex (–32,768 to 32,767)	Cleared to zero at following times: • When power to CPU Unit is turned ON • At start of operation • When an error counter error occurs Updated at following times: • Cyclically according to error counter cycle Saved at following times: • When Error Counter Disable Bit (A562.01) is turned ON.	Use to monitor the difference between the target value and the present value.
A38	00 to 15	Lower 4 digits of present value of pulse output to inverter (relative value)	8000 0000 to 7FFF FFFF hex (–2,147,483,648 to 2,147,483,647)	Contains relative internal pulse output value when pulses are output to error counter. Cleared to zero at following times: • When power to CPU Unit is turned ON • When operation is started • When pulse output to error counter is started Updated at following times: • Cyclically on error counter cycle	These values can be used to monitor the present value of internal pulse output.
A39	00 to 15	Upper 4 digits of present value of pulse output to inverter (relative value)			

Word	Bits	Function	Data range	Refresh timing	Application examples
A278	00 to 15	Lower 4 digits of the present value of the internal pulse output (absolute value for absolute coordinates)	8000 0000 to 7FFF FFFF hex (–2,147,483,648 to 2,147,483,647)	Contains absolute movement value from the internal pulse origin when pulses are output to error counter. Cleared to zero at following times: • When power to CPU Unit is turned ON • When operation is started Updated at following times: • Cyclically on error counter cycle	This value can be used to monitor the present value of the internal pulse output as an absolute value when using absolute coordinates.
A279	00 to 15	Upper 4 digits of the present value of the internal pulse output (absolute value for absolute coordinates)			

Read/Write Area

Word	Bits	Function		Data range	Refresh timing	Application
A562	00	Inverter positioning 0	Error Counter Reset Bit	Turned ON: Error counter 0 present value (A22) reset and Error Counter Error Flag cleared.	---	Turn ON this bit to clear the error counter error status.
	01		Error Counter Disable Bit	While ON: Error counter value held.	---	Turn ON this bit, for example, to disable accumulating pulses in the error counter when stopping positioning and moving the motor shaft manually.
	02 to 15	Not used.				
A563	00	Inverter positioning 1	Error Counter Reset Bit	Turned ON: Error counter 0 present value (A32) reset and Error Counter Error Flag cleared.	---	Turn ON this bit to clear the error counter error status.
	01		Error Counter Disable Bit	While ON: Error counter value held.	---	Turn ON this bit, for example, to disable accumulating pulses in the error counter when stopping positioning and moving the motor shaft manually.
	02 to 15	Not used.				

Note **Present Values of High-speed Counter and Pulse Outputs**

The present value of the high-speed counter when inverter positioning is used is stored in the same memory location as for normal high-speed counter application. This value can be used as the present value of feedback pulses from the encoder, i.e., as the absolute position of inverter positioning. Target value and range comparisons for high-speed counters are also valid.

The present value of the pulse output (A276/A277 or A278/A279), i.e., the pulse output value to the error counter, is an absolute position if an absolute coordinate system is specified and is a relative position if a relative coordinate system is specified.

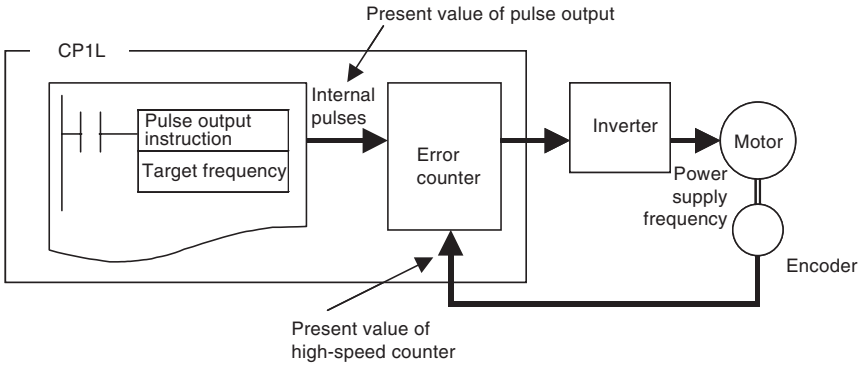

5-3-11 Application Example with Serial Communications

Positioning with Trapezoidal Control

Specifications and Operation

When start input CIO 1.04 turns ON, 600,000 pulses are output internally for inverter positioning 0 to turn the motor shaft.

Note Refer to *5-3-7 Determining the Internal Pulse Output Frequency* for the formula to convert the frequency and use the converted internal pulse frequency. The number of output pulses is calculated from the encoder specifications and the high-speed counter multiplier.

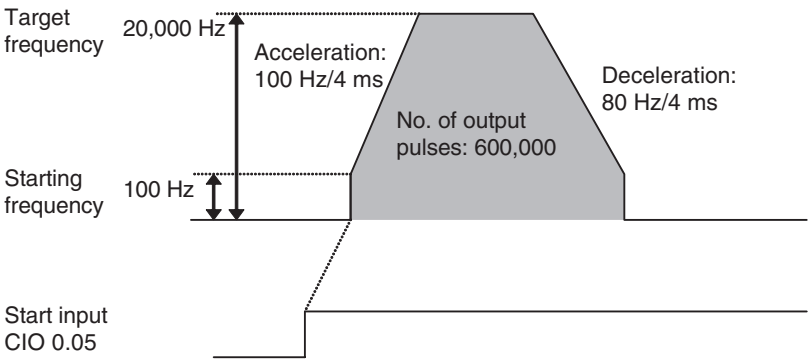

System Configuration

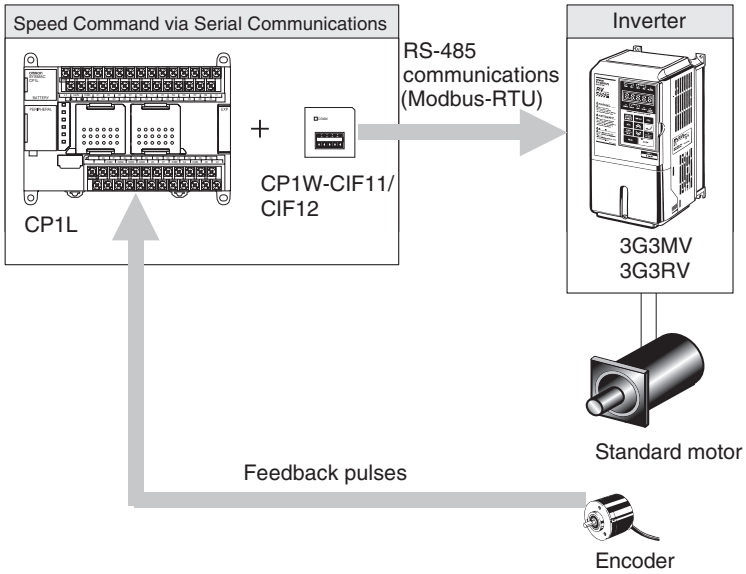

Instructions Used

PLS2(887)

Terminal Allocations

■ Error Counter

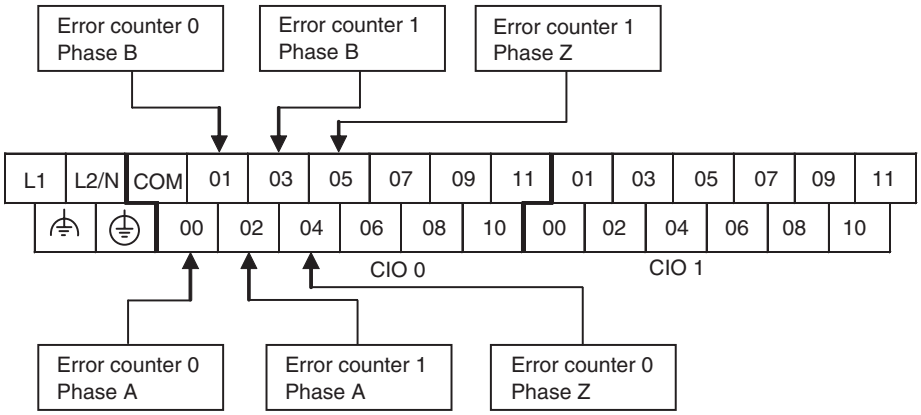

■ RS-422A/485 Communications (CP1W-CIF11/CIF12)

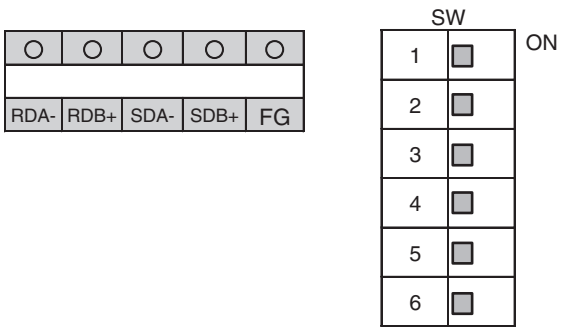

■ **Inverter (3G3MV)**

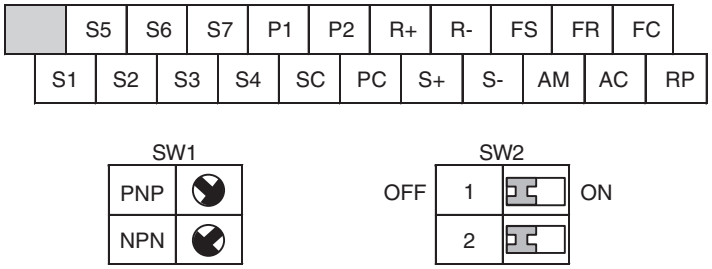

■ **Encoder**

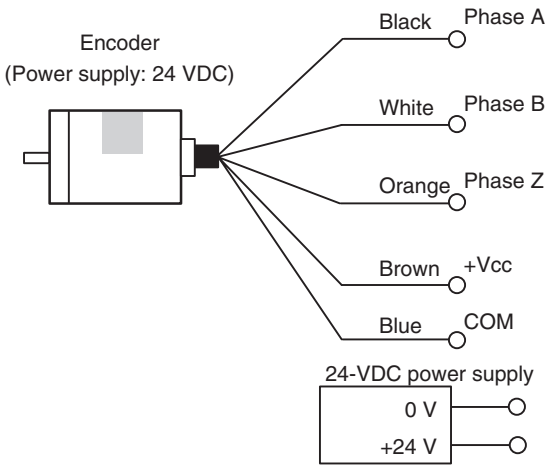

Connection Example

■ **Encoder (24 VDC) Connections to High-speed Counter 0**

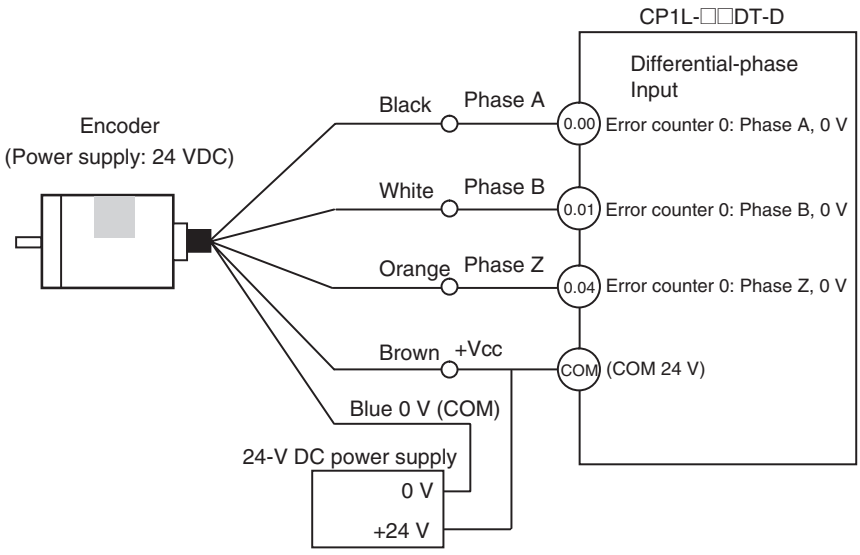

■ **RS-422A/485 (CP1W-CIF11/CIF12) Connections to Inverter**

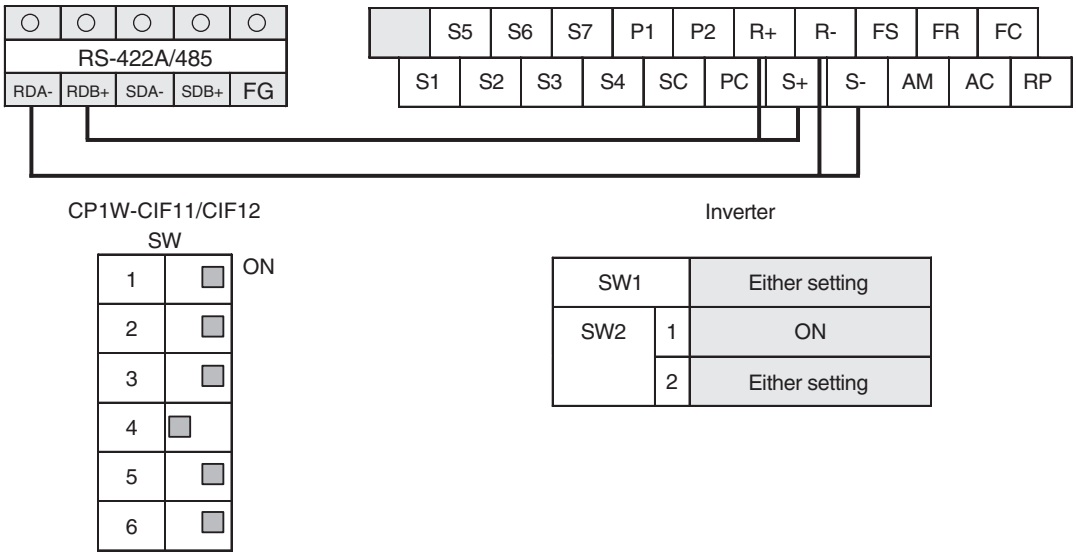

■ **Inverter Connections to Motor**

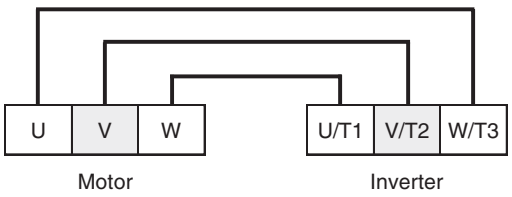

Parameter Settings for 3G3MV Inverter

When connecting the Inverter to the PLC, communications parameters must be set in the Inverter. The settings of parameters n152 to n157 cannot be changed while communications are in progress. Always set them before starting communications.

Example settings of 3G3MV parameters are listed below. Refer to the *User's Manual* of the Inverter for details on the parameters.

Parameter No.	Name	Description	Default	Setting
n003	RUN command selection	0: The RUN Key and STOP/RESET Key on the Digital Operator are enabled. 1: Multi-function input is enabled through the control circuit terminals. 2: RS-422A/485 communications are enabled. 3: Input is enabled from the optional Communications Unit.	0	2
n004	Frequency reference selection	0: Frequency reference adjustment 1: Frequency reference 1 (n024) 2: Frequency reference control terminal (0 to 10 V) 3: Frequency reference control terminal (4 to 20 mA) 4: Frequency reference control terminal (0 to 20 mA) 5: Pulse train reference control terminal 6: Frequency reference through RS-422A/RS-485 7: Multi-function analog voltage input (0 to 10 V) 8: Multi-function analog current input (4 to 20 mA) 9: Frequency reference input through optional Communications Unit.	0	6
n005	Stopping method selection	0: Decelerates to stop 1: Coasts to stop	0	0
n006	Reverse rotation-prohibit selection	0: Reverse enabled 1: Reverse disabled	0	0
n011	Maximum frequency (FMAX)	50.0 to 400.0 Hz (0.1-Hz increments)	60.0 Hz	60.0 Hz (Depends on machine configuration.)
n016	Minimum output frequency (FMIN)	0.1 Hz to 10.0 Hz (0.1-Hz increments)	1.5 Hz	0.1 Hz
n018	Acceleration/deceleration time setting unit	0: 0.1 s 1: 0.01 s	0	0
n019	Acceleration time 1	0 to 6,000 s	10.0 s	0
n020	Deceleration time 1	0 to 6,000 s	10.0 s	0
n151	RS-422A/485 communications timeover detection selection (The time between receiving PLC signals is monitored, Timeout time: 2 s.)	0: Detects time-over, fatal error, and the Inverter coasts to a stop. 1: Detects time-over, detects fatal error, and the Inverter decelerates to a stop in deceleration time 1. 2: Detects time-over, detects fatal error, and the Inverter decelerates to a stop in deceleration time 2. 3: Detects time-over, detects nonfatal error warning, and the Inverter continues operating. 4: No time-over is detected.	0	0
n152	RS-422A/485 communications frequency reference/display unit selection	0: 0.1 Hz 1: 0.01 Hz 2: Converted value based on 30,000 decimal as maximum frequency 3: 0.1% (Maximum frequency: 100%)	0	1

Parameter No.	Name	Description	Default	Setting
n153	RS-422A/485 communications Slave address	Setting range: 0 to 32 00: Communications disabled 01 to 32: Slave address	0	1
n154	RS-422A/485 baud rate selection	0: 2,400 bps 1: 4,800 bps 2: 9,600 bps 3: 19,200 bps	2	2
n155	RS-422A/485 parity selection	0: Even 1: Odd 2: No parity	0	0
n156	RS-422A/485 send wait time	Set value: 10 to 65 ms Setting unit: 1 ms	10 ms	10 ms
n157	RS-422A/485 RTS control selection	0: RTS control enabled 1: RTS control disabled	0	0

PLC Setup

■ Serial Port Communications Settings

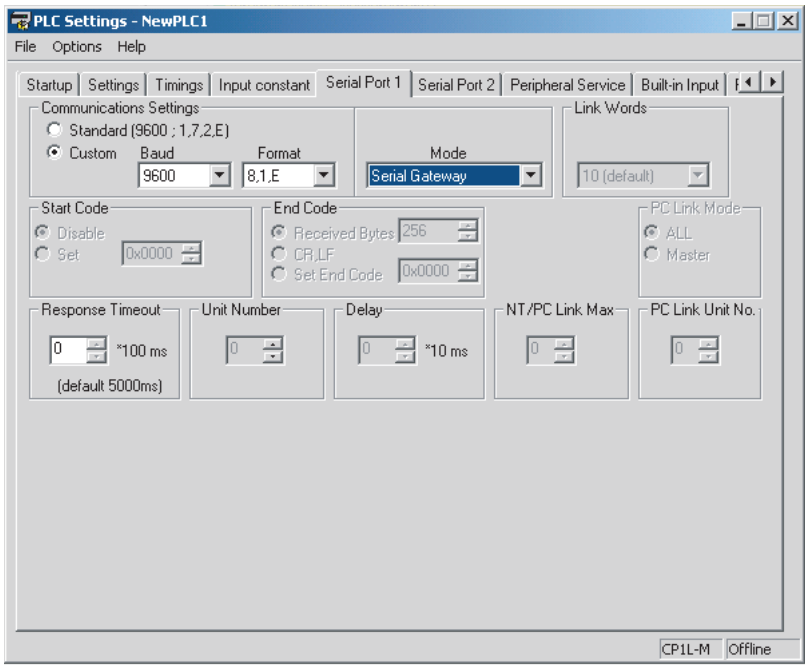

Note (1) Set the baud rate and parity check settings to the same value as for the Inverter communications parameters.

(2) Set the serial port to the serial gateway communications mode.

■ **High-speed Counter Settings (on Built-in Input Tab Page)**

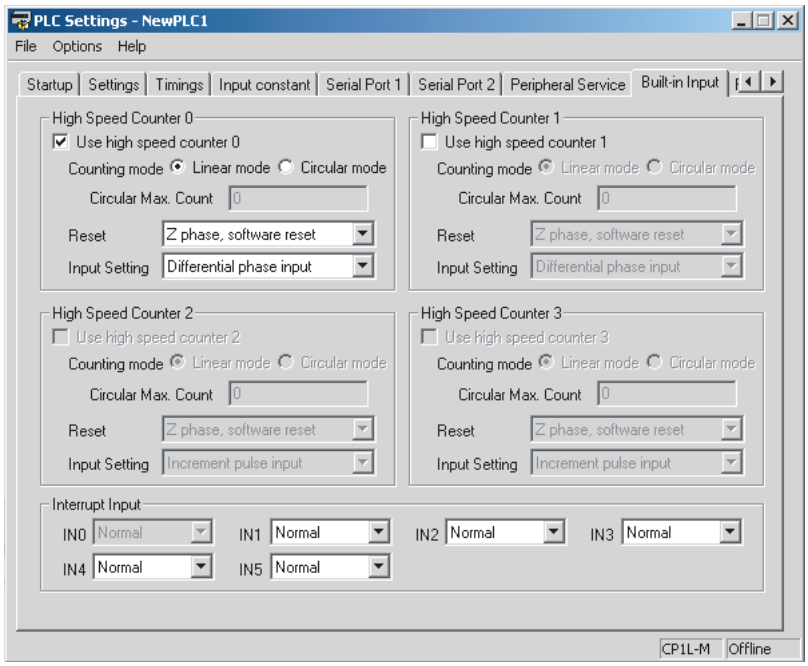

Note (1) Set high-speed counter 0 when using inverter positioning 0. Set high-speed counter 1 when using inverter positioning 1.

(2) Use linear mode for inverter positioning.

■ **Inverter Positioning Settings (on Inverter Positioning 0 or 1 Tab Page)**

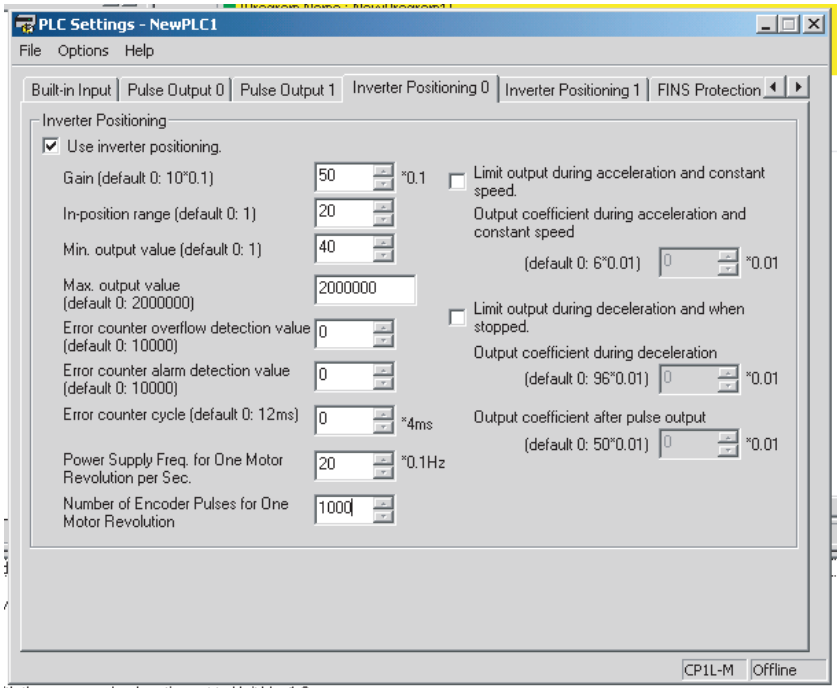

Ladder Program

The following Modbus-RTU communications parameters are used.

Baud rate	9,600 bits/s
Format	8, 1, E
Serial communications mode	Serial Gateway

Serial port 1 is used for communications with the Inverter.

Starting Inverter Positioning

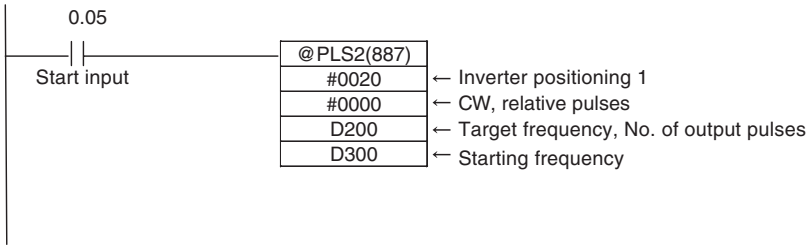

■ PLS2(887) Settings

Setting details	Address	Data
Acceleration rate: 100 Hz/4 ms	D200	0064
Deceleration rate: 80 Hz/4 ms	D201	0050
Target frequency: 20,000 Hz	D202	4E20
	D203	0000
Number of output pulses: 600,000 pulses	D204	27C0
	D205	0009
Starting frequency: 100 Hz	D300	0064
	D301	0000

- High-speed counter 0 (i.e., error counter 0) is used for the feedback pulse input port.

Stopping Internal Pulse Output to the Error Counter

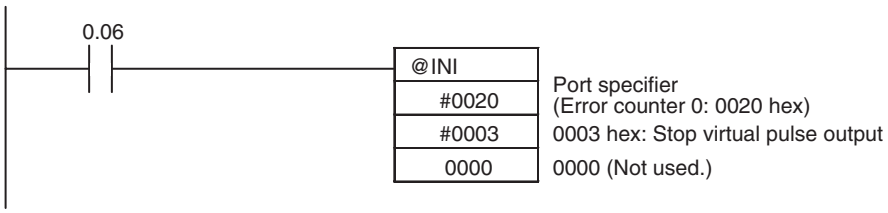

- Internal pulse output is stopped immediately.
- Inverter positioning (i.e., the error counter) will continue to function.

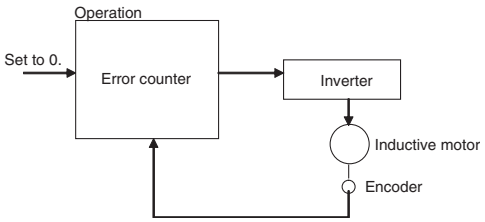

Stopping Inverter Positioning

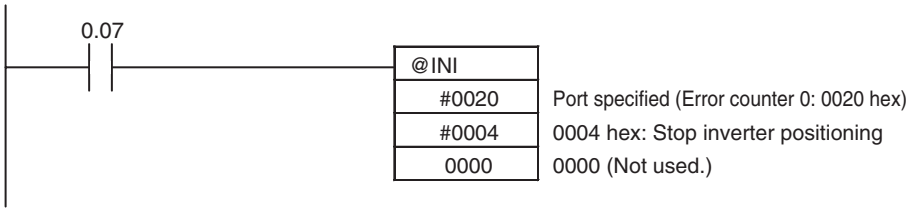

- Internal pulse output is stopped immediately.
- The output value will remain at 0 until the error counter is reset.

- Pulse outputs will not be accepted until the error counter is reset. (Executing a pulse output instruction will cause an error.)

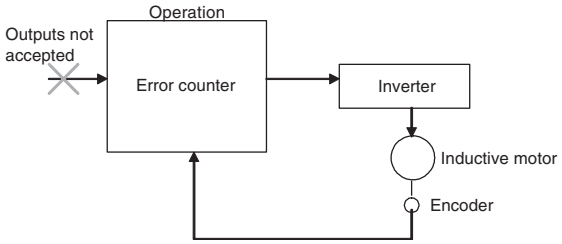

Referencing the Automatically Calculated Inverter Frequency Command Value

If the following settings are made in the PLC Setup, the inverter frequency command value will be calculated automatically and set in A23 in the Auxiliary Area. These settings are on the Inverter Positioning 0 Tab Page in the PLC Setup.

- Power Supply Frequency for One Motor Revolution per Second (0.1-Hz increments)
- Number of Encoder Pulses for One Motor Revolution
- Error Counter Cycle (x 4 ms)

The inverter frequency command value in A23 is accessed. The value is stored in 0.01-Hz increments.

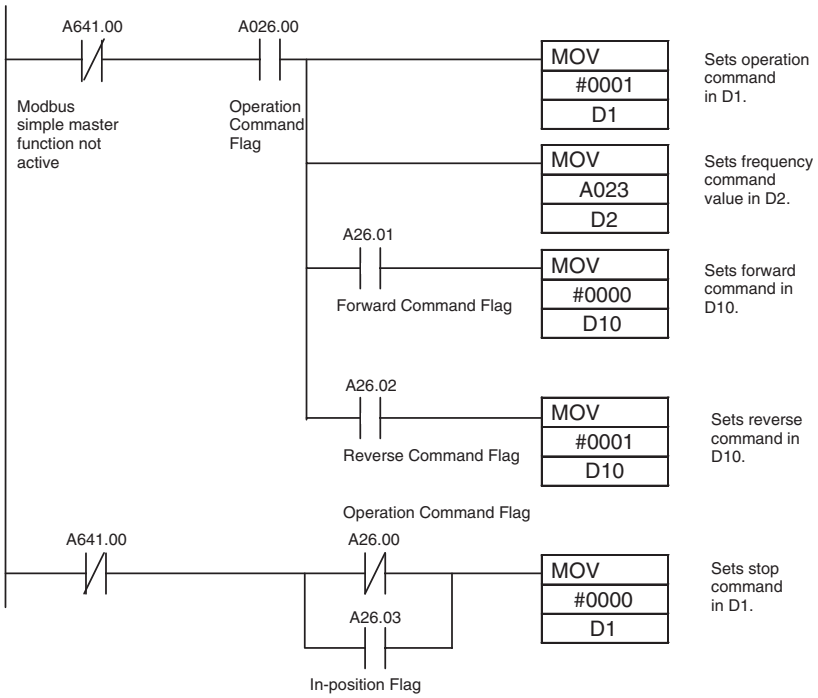

■ **Internal Work Addresses**

Address	Usage
D1	Bits 00 to 03: Run/Stop Command
D2	Bits 00 to 15: Frequency Command Value
D10	Bits 00 to 03: Forward/Reverse Command

Setting Modbus Communications Registers

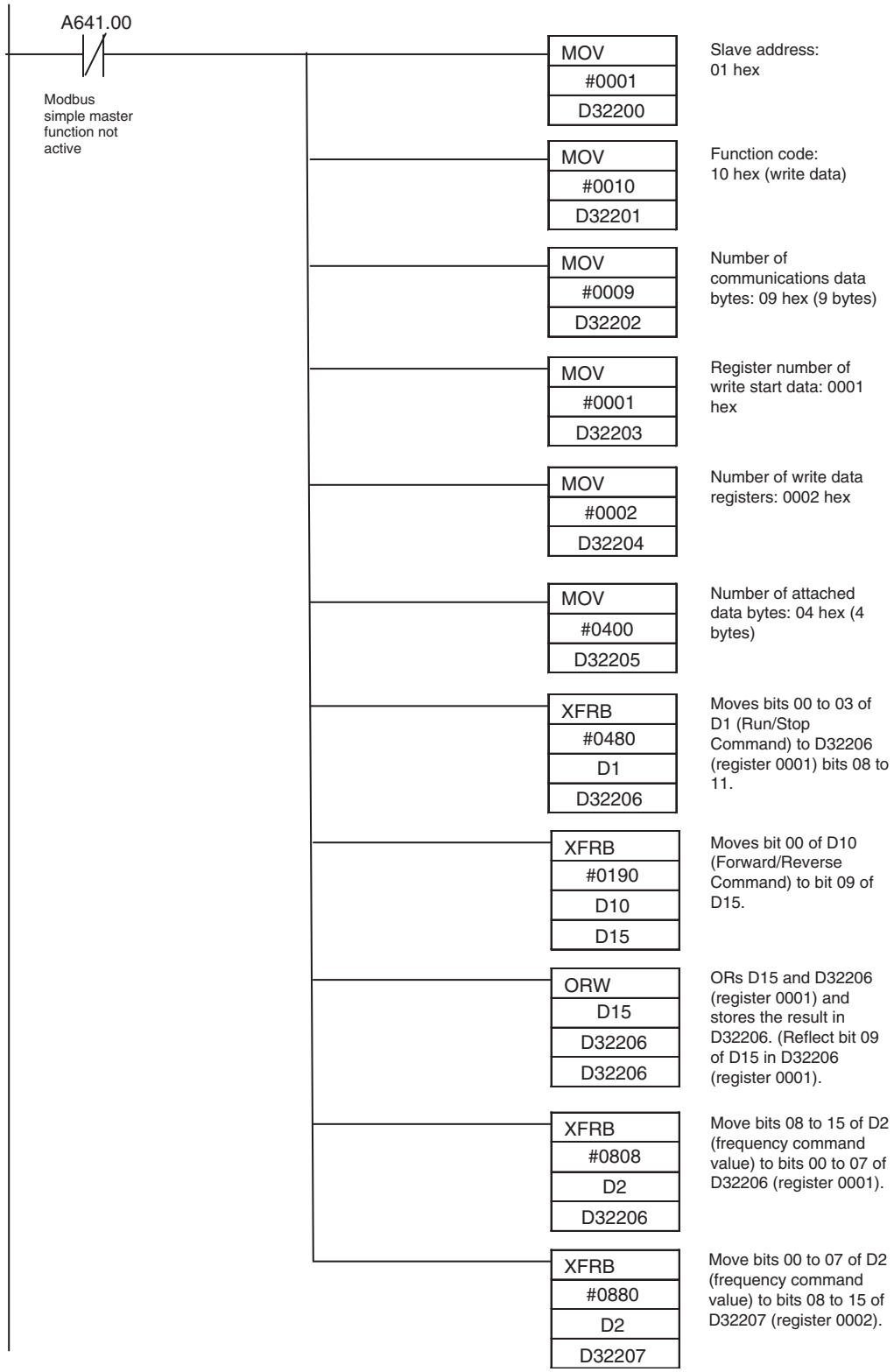

■ **Internal Work Addresses**

Address	Usage
D1	Bits 00 to 03: Run/Stop Command
D2	Bits 00 to 15: Frequency Command Value
D10	Bits 00 to 03: Forward/Reverse Command
D15	Bit 09: Forward/Reverse Command

■ **Settings Addresses**

Address	Usage	Data
D32200	Bits 00 to 07: Slave address	01
D32201	Bits 00 to 07: Function code	10
D32202	Bits 00 to 07: Number of communications data bytes	09
D32203	Bits 00 to 15: Register number of write start data	0001
D32204	Bits 00 to 15: Number of data registers to write	0002
D32205	Bits 08 to 15: Number of attached data bytes	04
D32206	Bits 00 to 07: Upper bytes of frequency command value in D2 Bit 08: Run/Stop Command Bit 09: Forward/Reverse Command	---
D32207	Bits 08 to 15: Lower bytes of frequency command value in D2	---

Modbus Communications

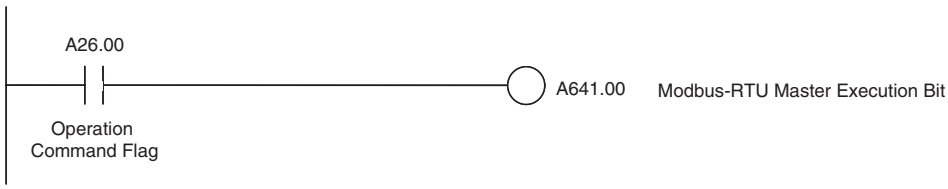

Add the above instructions to the end of the program as a starting condition for the ladder programming example. For error processing, refer to the ladder program in *6-3-3 Modbus-RTU Easy Master Function* and to the inverter's manual.

5-3-12 Application Example with an Analog Output

Positioning with Trapezoidal Control

Specifications and Operation

When start input CIO 1.04 turns ON, 600,000 pulses are output internally for inverter positioning 0 to turn the motor shaft.

Note Refer to *5-3-7 Determining the Internal Pulse Output Frequency* for the formula to convert the frequency and use the converted internal pulse frequency. The number of output pulses is calculated from the encoder specifications and the high-speed counter multiplier.

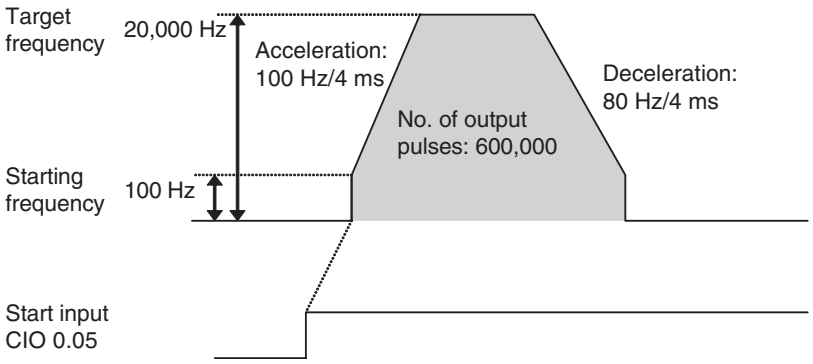

System Configuration

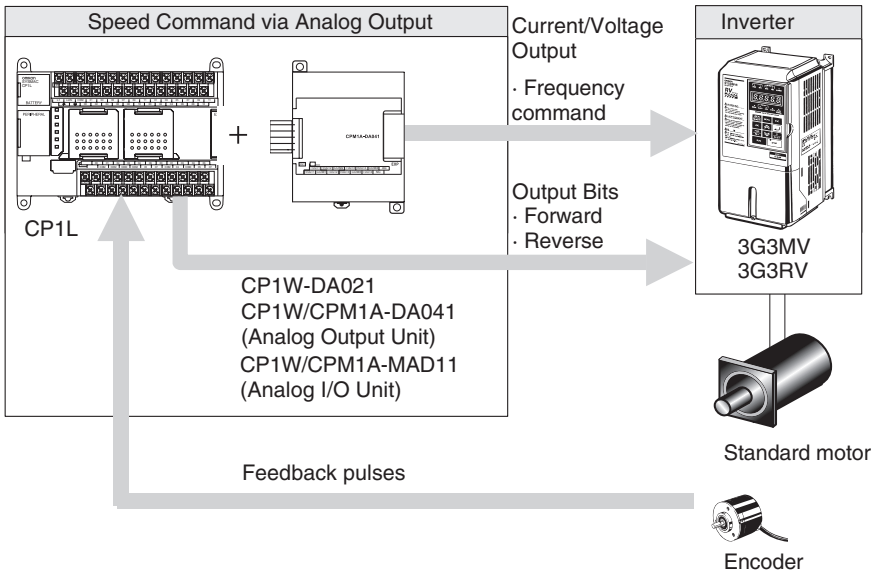

Instructions Used

PLS2(887)

Terminal Allocations

■ **Error Counter**

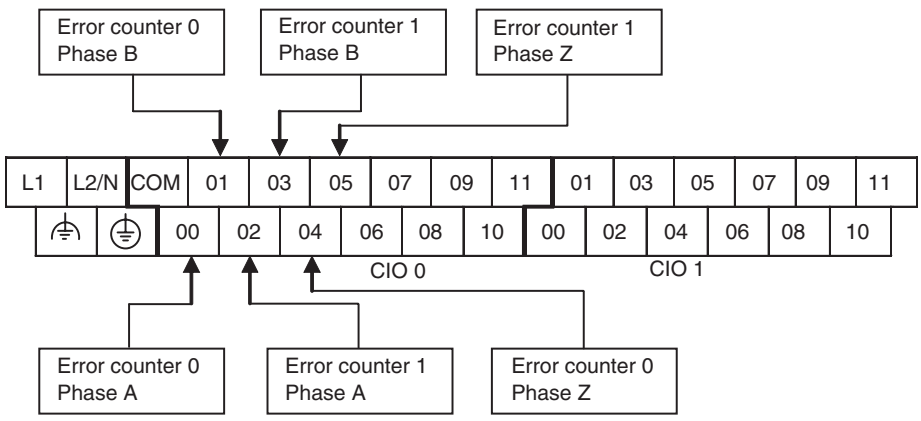

■ Built-in Outputs

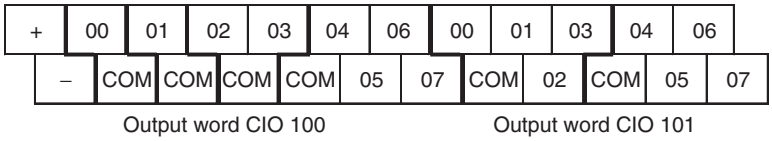

■ CP1W/CPM1A-DA041

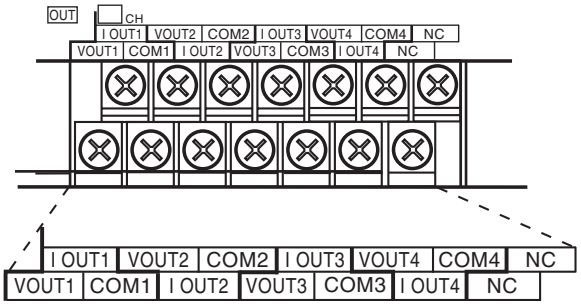

■ Inverter (3G3MV)

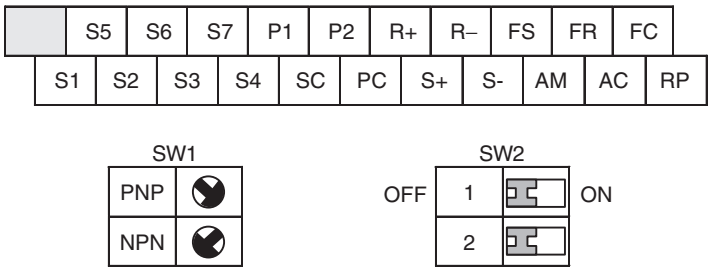

■ Encoder

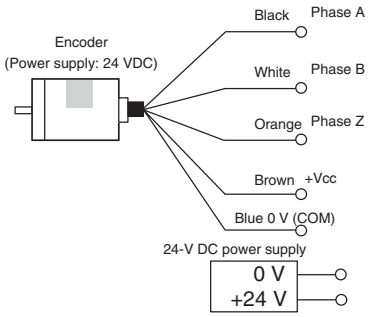

Connection Example

■ Encoder (24 VDC) Connections to High-speed Counter 0

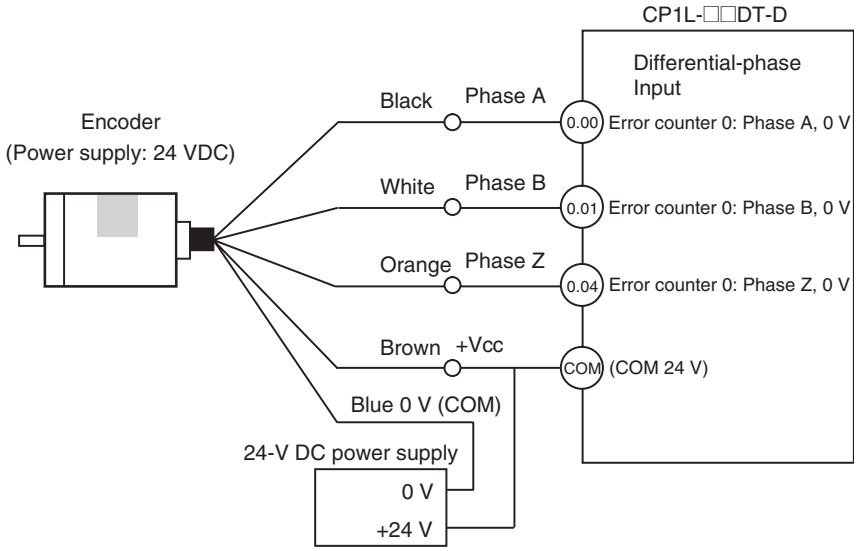

■ Output Terminal Connections to Inverter

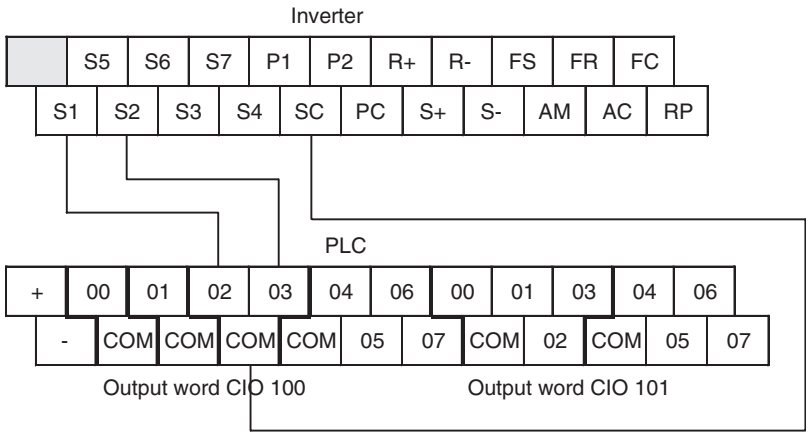

■ CP1W/CPM1A-DA041 (Current Output) Connections to Inverter

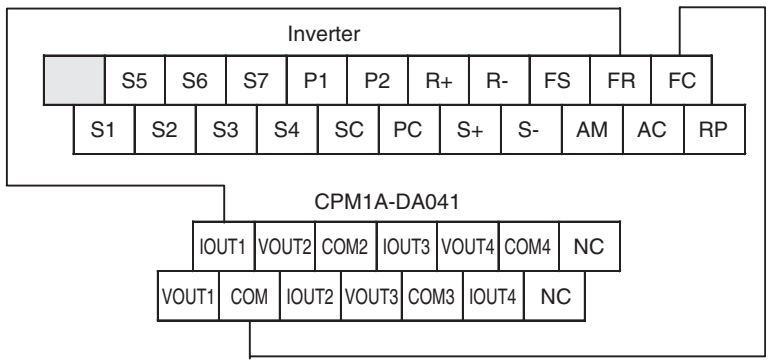

Inverter Switch Settings

SW1		NPN
SW2	1	Either setting
	2	ON (Current: I)

■ **Inverter Connections to Motor**

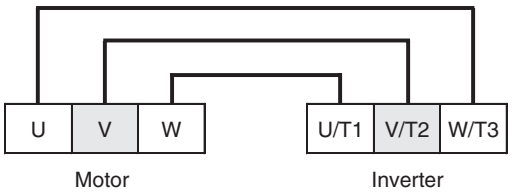

Parameter Settings for 3G3MV Inverter

When connecting the Inverter to the PLC, communications parameters must be set in the Inverter.

Example settings of 3G3MV parameters are listed below. Refer to the *User's Manual* of the Inverter for details on the parameters.

Parameter No.	Name	Description	Default	Setting
n003	RUN command selection	0: The RUN Key and STOP/RESET Key on the Digital Operator are enabled. 1: Multi-function input is enabled through the control circuit terminals. 2: RS-422A/485 communications are enabled. 3: Input is enabled from the optional Communications Unit.	0	1
n004	Frequency reference selection	0: Digital Operator 1: Frequency reference 1 (n024) 2: Frequency reference control terminal (0 to 10 V) 3: Frequency reference control terminal (4 to 20 mA) 4: Frequency reference control terminal (0 to 20 mA) 5: Pulse train reference control terminal 6: Frequency reference through RS-422A/RS-485 7: Multi-function analog voltage input (0 to 10 V) 8: Multi-function analog current input (4 to 20 mA) 9: Frequency reference input through optional Communications Unit.	0	4
n050	Multi-function input 1	1 to 25	1	1
n051	Multi-function input 2	1 to 25	2	2
n060	Frequency reference gain	0% to 255% (1% increments)	100%	100%
n061	Frequency reference bias	−100% to 100% (1% increments)	0%	0%
n005	Stopping method selection	0: Decelerates to stop 1: Coasts to stop	0	0
n006	Reverse rotation-prohibit selection	0: Reverse enabled 1: Reverse disabled	0	0
n011	Maximum frequency (FMAX)	50.0 to 400.0 Hz (0.1-Hz increments)	60.0 Hz	60.0 Hz (Depends on machine configuration.)
n016	Minimum output frequency (FMIN)	0.1 Hz to 10.0 Hz (0.1-Hz increments)	1.5 Hz	0.1 Hz
n018	Acceleration/deceleration time setting unit	0: 0.1 s 1: 0.01 s	0	0
n019	Acceleration time 1	0 to 6,000 s	10.0 s	0
n020	Deceleration time 1	0 to 6,000 s	10.0 s	0

PLC Setup

■ High-speed Counter Settings (on Built-in Input Tab Page)

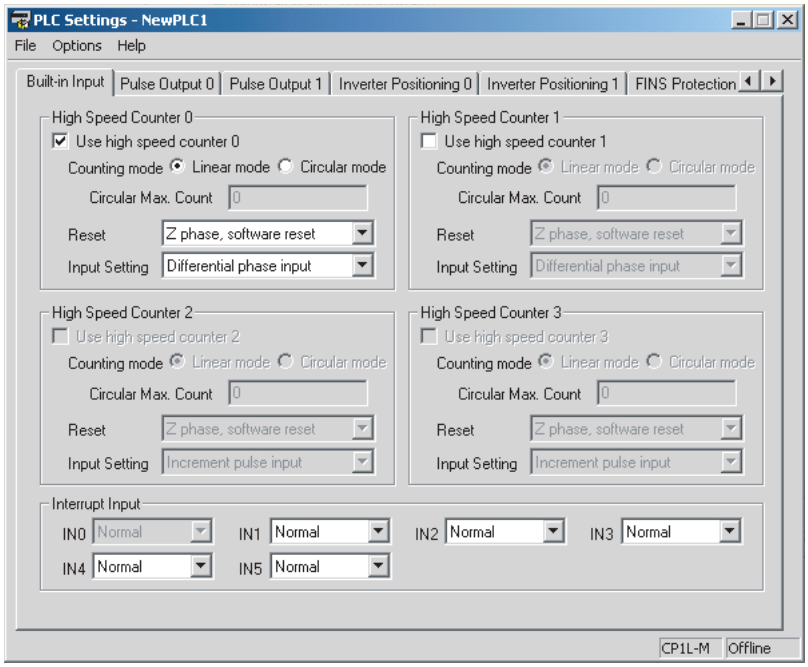

Note (1) Set high-speed counter 0 when using inverter positioning 0. Set high-speed counter 1 when using inverter positioning 1.

(2) Use linear mode for inverter positioning.

■ Inverter Positioning Settings (on Inverter Positioning 0 or 1 Tab Page)

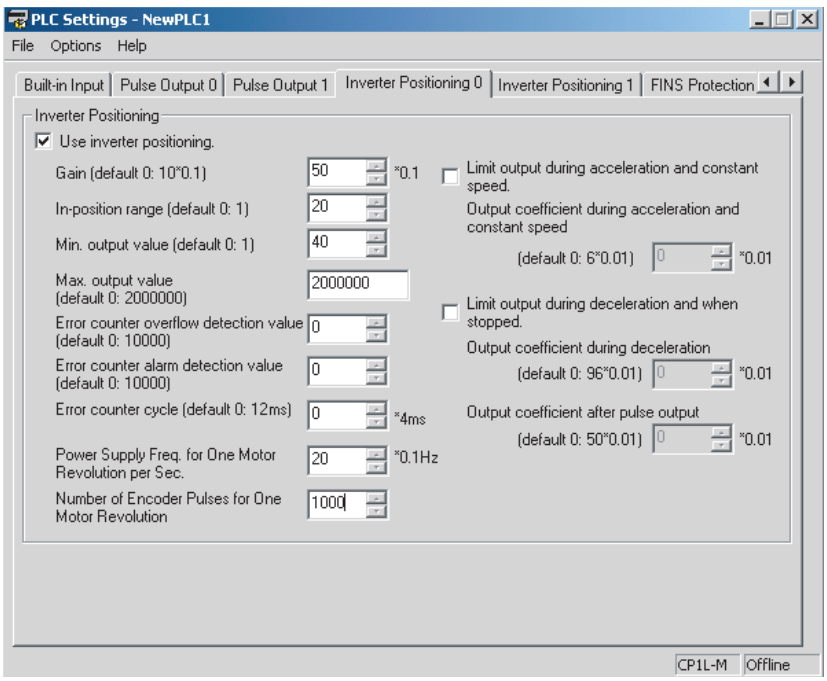

Ladder Program

Starting Inverter Positioning

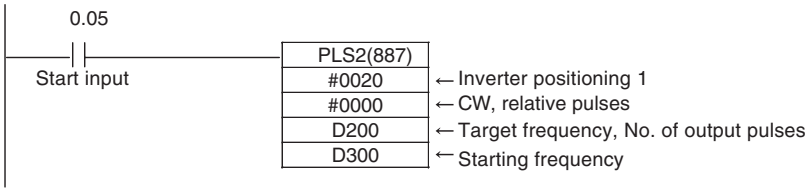

Note The pulse output method (CCW/CW or pulse + direction) setting and direction setting are not used.

■ **PLS2(887) Settings**

Setting details	Address	Data
Acceleration rate: 100 Hz/4 ms	D200	0064
Deceleration rate: 80 Hz/4 ms	D201	0050
Target frequency: 20,000 Hz	D202	4E20
	D203	0000
Number of output pulses: 600,000 pulses	D204	27C0
	D205	0009
Starting frequency: 100 Hz	D300	0064
	D301	0000

- High-speed counter 0 (i.e., error counter 0) is used for the feedback pulse input port.

Stopping Internal Pulse Output to the Error Counter

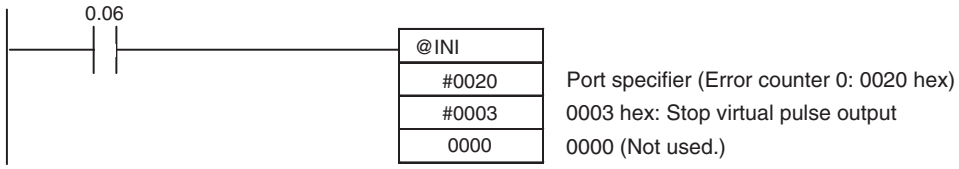

- Internal pulse output is stopped immediately.
- Inverter positioning (i.e., the error counter) will continue to function.

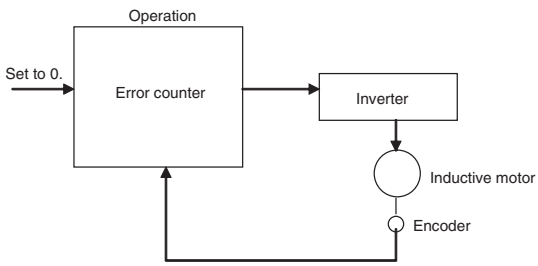

Stopping Inverter Positioning

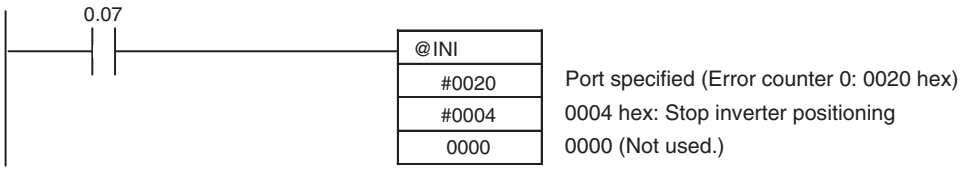

- Internal pulse output is stopped immediately.
- The output value will remain at 0 until the error counter is reset.
- Pulse outputs will not be accepted until the error counter is reset. (Executing a pulse output instruction will cause an error.)

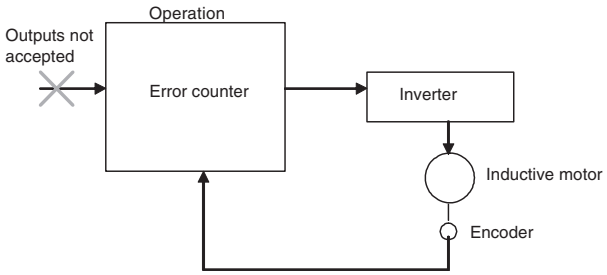

Referencing the Automatically Calculated Inverter Frequency Command Value

If the following settings are made in the PLC Setup, the inverter frequency command value will be calculated automatically and set in A23 in the Auxiliary Area. These settings are on the Inverter Positioning 0 Tab Page in the PLC Setup.

- Power Supply Frequency for One Motor Revolution per Second (0.1-Hz increments)
- Number of Encoder Pulses for One Motor Revolution
- Error Counter Cycle (x 4 ms)

The inverter frequency command value in A23 is accessed and converted to an analog output signal. The CP1W/CPM1A-DA041 has a resolution of 6,000, so the conversion to an analog signal is performed as follows:

6,000 ÷ 60 Hz (inverter's maximum output frequency) ÷ 100 = 1

The conditions are as follows:

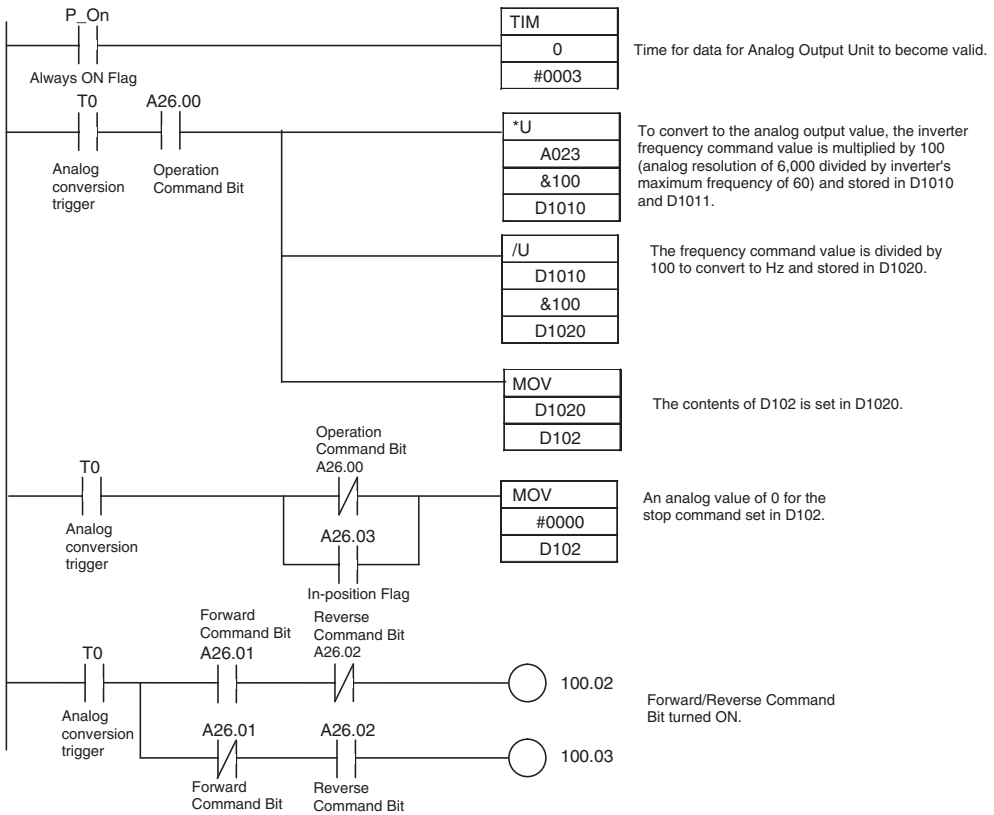

In this example, the results of *U and /UL are 1, so the value in A23 is moved directly to D102 with MOV.

■ **Internal Work Addresses**

Address	Usage
D1010	Holds the frequency command value converted for the analog output resolution.
D1011	
D1020	Holds the frequency command value converted from 0.01-Hz increments to hertz.
T0	Analog conversion trigger

■ **Settings Addresses**

Address	Usage
D102	Bits 00 to 15: Analog output value
CIO 100.02	Forward (external output)
CIO 100.03	Reverse (external output)

CP1W/CPM1A-DA041 Analog Output Settings

Analog output 1 is used in this example. It is set to a range of 4 to 20 mA. The scaled value is set in the analog conversion area of the Analog Output Unit.

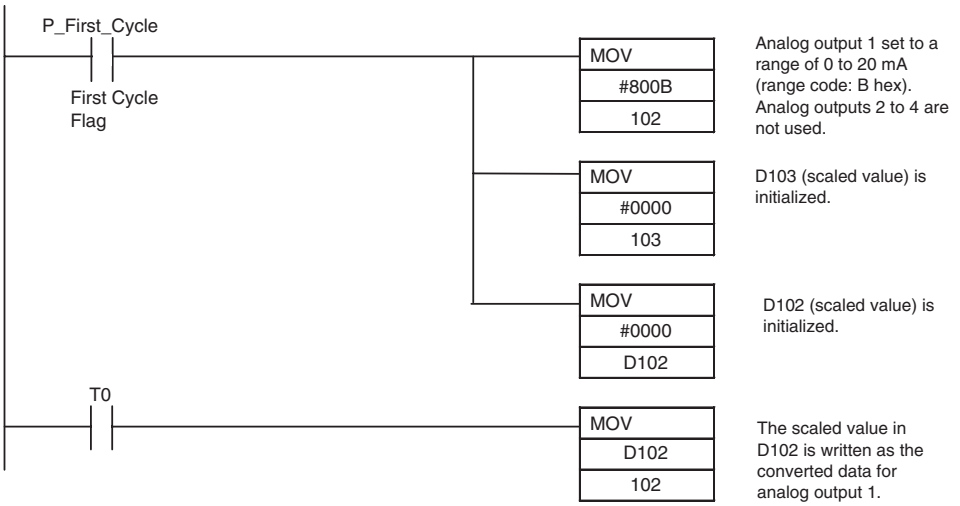

Refer to the first line in the programming example in *Referencing the Automatically Calculated Inverter Frequency Command Value* on page 334 for a timer for the time required for the Analog Output Unit's data to be valid (analog conversion trigger: T0).

■ **Internal Work Addresses**

Address	Usage
D102	Bits 00 to 15: Analog output value
T0	Analog conversion trigger

■ **Settings Addresses**

Address	Usage
CIO 102	Bits 00 to 15: Analog conversion area
CIO 103	Bits 00 to 15: Analog conversion area

5-3-13 Supplemental Information

Restrictions

- Inverter positioning 0 and inverter positioning 1 each use one high-speed counter and one serial port (except that a serial port is not used when an Analog Output Unit is used). (High-speed counter 0 is allocated to inverter positioning 0 and high-speed counter 1 is allocated to inverter positioning 1.)
- When inverter positioning 0 or 1 is used, the corresponding pulse output (0 or 1) and the corresponding PWM command (pulse output 0 or 1) cannot be used.

Precautions

- Determine the in-position range based on the mechanical system. Use a smaller range if positioning precision is required. If the range is too small, however, time may be required when stopping. If stopping quickly is more important than precision, increase the in-position range.
- The error counter cycle also affects the conversion between the output value and the inverter frequency command value. Refer to *5-3-9 Automatic Calculation of Inverter Frequency Command Value* for details.
- If inverter positioning does not end normally, adjust the following settings.

  Reduce the acceleration/deceleration rates.
  Lower rates will stabilize operation at the end of acceleration/deceleration.

  Reduce the target frequency.
  Change the error counter cycle. Increasing the error counter cycle improve stopping precision, but it may also cause unstable speeds during operation.

  Adjust the gain.
  Increasing the gain will improve stopping precision, but it may also cause unstable speeds during operation.

SECTION 6
Advanced Functions

This section describes all of the advanced functions of the CP1L that can be used to achieve specific application needs.

6-1 Interrupt Functions 338
6-1-1 Overview of CP1L Interrupt Functions 338
6-1-2 Input Interrupts (Direct Mode) 342
6-1-3 Input Interrupts (Counter Mode) 347
6-1-4 Scheduled Interrupts 350
6-1-5 High-speed Counter Interrupts 353
6-2 Quick-response Inputs 362
6-3 Serial Communications 366
6-3-1 Overview 366
6-3-2 No-protocol Communications 368
6-3-3 Modbus-RTU Easy Master Function 371
6-3-4 Communications: Smart Active Parts and Function Blocks 374
6-3-5 Serial PLC Links 377
6-3-6 1:1 Links 386
6-3-7 1:N NT Links 387
6-3-8 1:1 NT Links 388
6-3-9 Host Link Communications 389
6-4 Analog Adjuster and External Analog Setting Input 394
6-4-1 Analog Adjuster 394
6-4-2 External Analog Setting Input 394
6-5 Battery-free Operation 395
6-5-1 Overview 395
6-5-2 Using Battery-free Operation 396
6-6 Memory Cassette Functions 397
6-6-1 Overview 397
6-6-2 Mounting and Removing a Memory Cassette 398
6-6-3 Operation Using the CX-Programmer 400
6-6-4 Memory Cassette Data Transfer Function 401
6-6-5 Procedures for Automatic Transfer from the Memory Cassette at Startup 404
6-7 Program Protection 405
6-7-1 Read Protection 405
6-7-2 Write Protection 411
6-7-3 Protecting Program Execution Using the Lot Number 413
6-8 Failure Diagnosis Functions 414
6-8-1 Failure Alarm Instructions: FAL(006) and FALS(007) 414
6-8-2 Failure Point Detection: FPD(269) 415
6-8-3 Simulating System Errors 416
6-8-4 Output OFF Bit 417
6-9 Clock 418

6-1 Interrupt Functions

6-1-1 Overview of CP1L Interrupt Functions

The CP1L CPU Unit's processing is normally cyclical (overseeing processing → program execution → I/O refreshing → peripheral servicing), with cyclic tasks executed in the program execution stage of the cycle. The interrupt functions can be used to temporarily interrupt this cyclic processing and execute a particular program when a predefined condition occurs.

Types of Interrupt Functions

Input Interrupts (Direct Mode)

When one of the CPU Unit's built-in inputs goes from OFF to ON (or ON to OFF), the corresponding interrupt task is executed. Interrupt tasks 140 to 145 are allocated to the 8 input terminals used for the input interrupts.

Input Interrupts (Counter Mode)

This function counts input pulses at one of the CPU Unit's built-in inputs and executes the corresponding interrupt task when the count reaches the SV.

The maximum input response frequency for input interrupts (in counter mode) is 5 kHz.

Scheduled Interrupts

This function executes an interrupt task at a fixed time interval measured by the CPU Unit's built-in timer. The time interval units can be set to 10 ms, 1 ms, or 0.1 ms. The minimum timer SV is 0.5 ms.

Interrupt task 2 is allocated to scheduled interrupt.

High-speed Counter Interrupts

This function counts input pulses with the CPU Unit's built-in high-speed counter and executes an interrupt task when the count reaches the preset value or falls within a preset range (target-value or zone comparison). An interrupt task between 0 and 255 can be allocated with an instruction.

Refer to *5-1 High-speed Counters* for details on high-speed counters.

Note Power OFF interrupts cannot be used with CP1L CPU Units.

Creating an Interrupt Task Program

1,2,3...

1. Right-click *NewPLC1 [CP1L] Offline* in the project workspace and select ***Insert Program*** from the pop-up menu. A new program called *NewProgram2 (unassigned)* will be inserted in the project workspace.

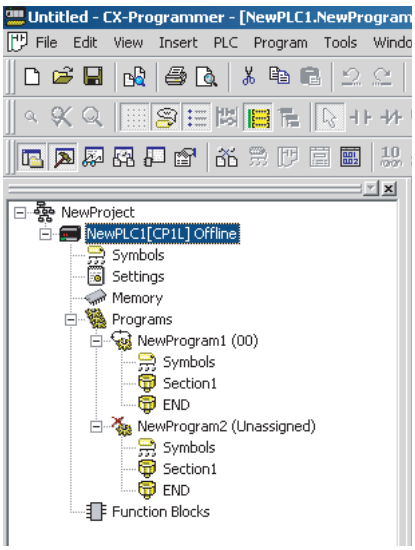

2. Right-click *NewProgram2 (unassigned)* and select ***Properties*** from the pop-up menu to display the Program Properties Window.

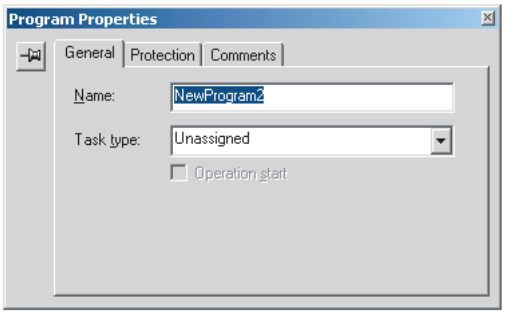

3. Set the *Task type* in the Program Properties Window.
In this example, interrupt task 140 was allocated to NewProgram2.

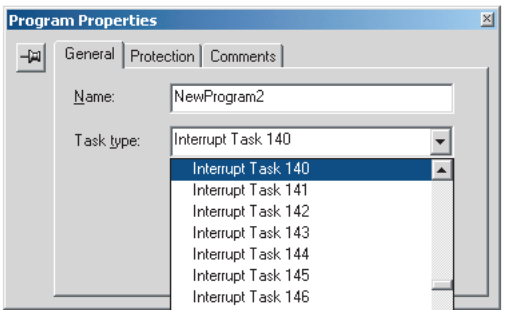

If you click the **X** Button in the upper-right corner of the window, you can create the program that will be executed as interrupt task 140.

The programs allocated to each task are independent and an END(001) instruction must be input at the end of each program.

Interrupt Task Priority

The input interrupts (direct mode and counter mode), high-speed counter interrupts, scheduled interrupts, and external interrupts all have the same priority. If interrupt task A (an input interrupt, for example) is being executed when interrupt task B (a scheduled interrupt, for example) is called, task A processing will not be interrupted. Task B processing will be started when task A is completed.

If two different types of interrupt occur simultaneously, they are executed in the following order:

Input interrupt (direct mode or counter mode)	>	High-speed counter interrupt	>	Scheduled interrupt

If two of the same type interrupt occur simultaneously, the task with the lower interrupt task number is executed first.

Note If a user program is likely to generate multiple interrupts simultaneously, the interrupt tasks will be executed in the order shown above, so it may take some time from the occurrence of the interrupt condition to the actual execution of the corresponding interrupt task. In particular, it is possible that scheduled interrupts will not be executed in the preset time, so the program must be designed to avoid interrupt conflicts if necessary.

Duplicate Processing in Cyclic and Interrupt Tasks

If a memory address is processed both by a cyclic task and an interrupt task, an interrupt mask must be set to disable interrupts.

When an interrupt occurs, execution of the cyclic task will be interrupted immediately, even during execution of a cyclic task's instruction, and the partially processed data is saved. After the interrupt task is completed, processing returns to the cyclic task and the interrupted processing restarts with the data saved before the interrupt processing. If the interrupt task overwrites a memory address used by one of the interrupted instruction's operands, that overwrite may not be reflected after the saved data is restored as processing returns to the cyclic task.

To prevent an instruction from being interrupted during processing, enter DI(693) just before the instruction to disable interrupts and EI(694) just after the instruction to enable interrupts again.

a. The following example shows duplicate processing by an interrupt task, which interrupts processing of a +B instruction between the first and third operands and overwrites the same memory address.

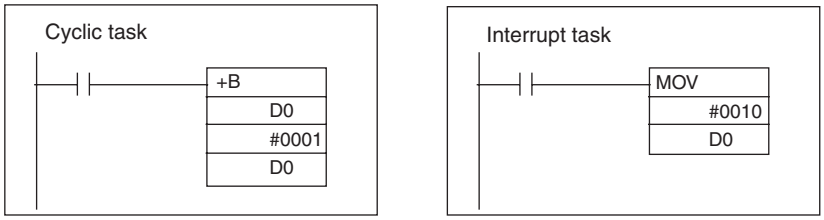

Flow of Processing

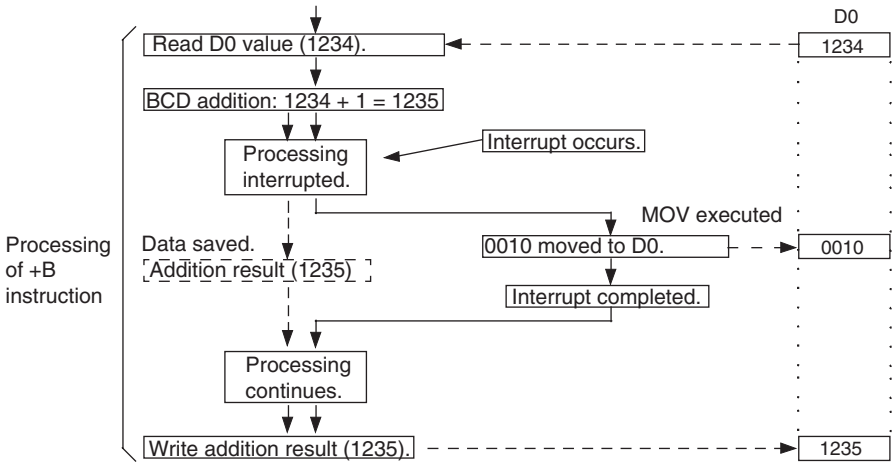

The interrupt occurs during processing of the +B instruction and the result is saved temporarily without being written to the destination word (D0).

The interrupt task transfers the value of #0010 to D0, but the saved result of the +B instruction (1235) is written to D0 when processing returns to the cyclic task. In the end, the interrupt task's processing has no effect.

Prevention of Duplicate Processing

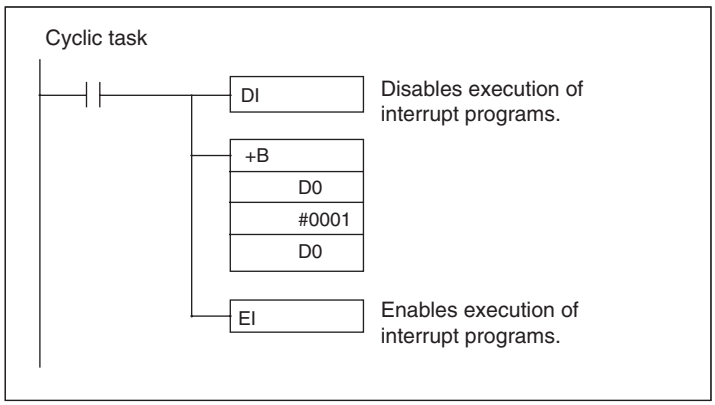

b. The following example shows duplicate processing by an interrupt task, which interrupts processing while BSET is writing to a block of words and yields an incorrect comparison result.

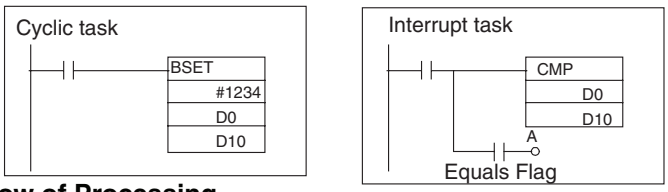

Flow of Processing

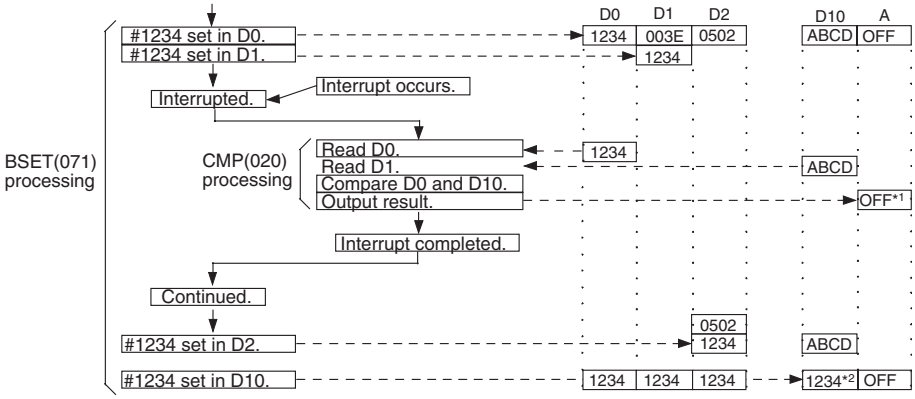

Since the interrupt occurs during BSET(071) processing and before #1234 is set in D10, the content of D0 and D10 do not match when the comparison is made in the interrupt task (*1) and output A remains OFF.

In the end (*2), the D0 and D10 both contain #1234 and match, but the correct comparison result is not reflected in comparison result output A.

Prevention of Duplicate Processing

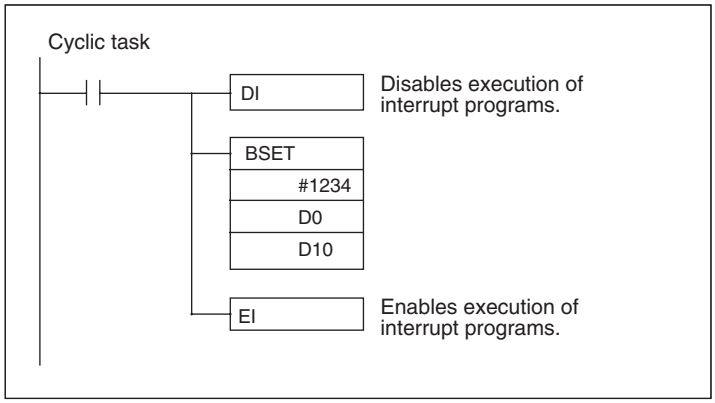

6-1-2 Input Interrupts (Direct Mode)

This function executes an interrupt task when the corresponding input signal (up or down differentiated) is received.

Input Interrupt Bit and Terminal Allocations

The following diagrams show the input bits and terminals that are used for the input interrupt function in each CPU Unit.

Input Terminal Block of CPU Units with 10 I/O Points

The 2 input bits CIO 0.04 to CIO 0.05 can be used for input interrupts.

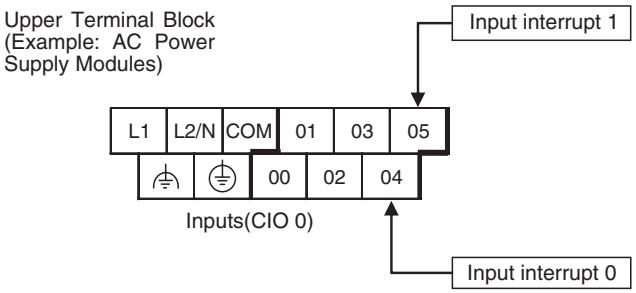

Input Terminal Block of CPU Units with 14 I/O Points

The 4 input bits CIO 0.04 to CIO 0.07 can be used for input interrupts.

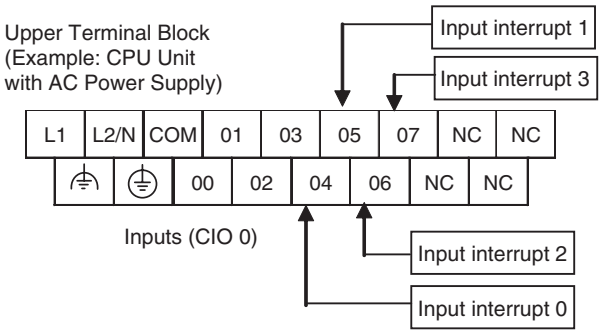

Input Terminal Block of CPU Units with 20 I/O Points

The 6 input bits CIO 0.04 to CIO 0.09 can be used for input interrupts.

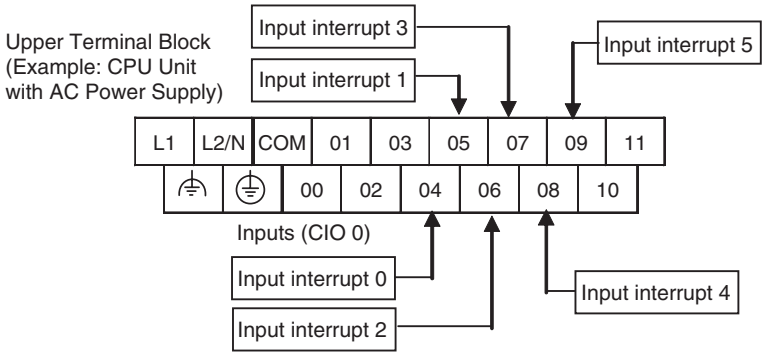

Input Terminal Block of CPU Units with 30 I/O Points

The 6 input bits CIO 0.04 to CIO 0.09 can be used for input interrupts.

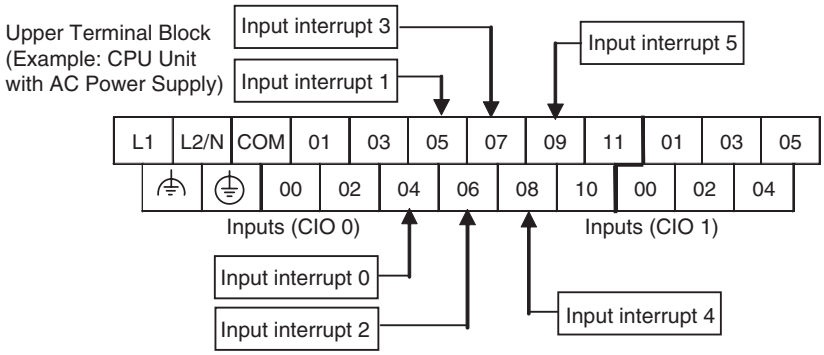

Input Terminal Block of CPU Units with 40 I/O Points

The 6 input bits CIO 0.04 to CIO 0.09 can be used for input interrupts.

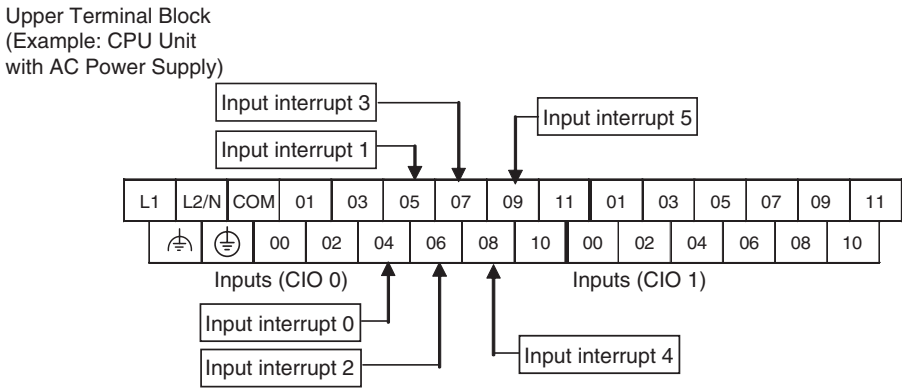

Input Terminal Block of CPU Units with 60 I/O Points

The 6 input bits CIO 0.04 to CIO 0.09 can be used for input interrupts.

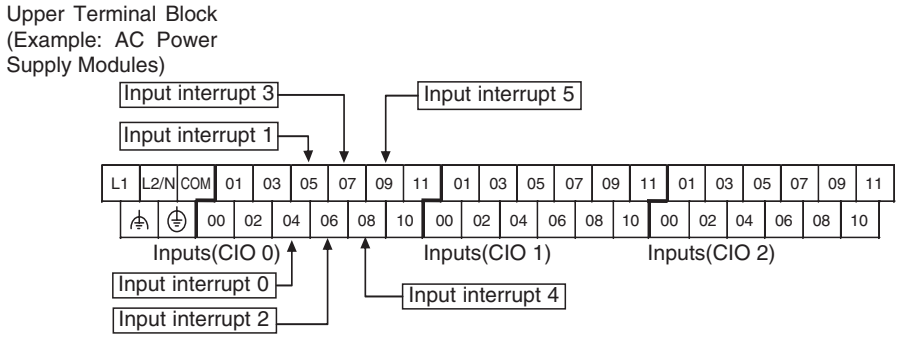

Setting the Input Functions in the PLC Setup

Normally, bits CIO 0.04 to CIO 0.09 are used as normal inputs. When using these inputs for input interrupts, use the CX-Programmer to change the input's setting in the PLC Setup.

Input terminal block		CPU Unit						Input interrupt	Task number
Word	Bit	CPU Units with 60 I/O Points	CPU Units with 40 I/O Points	CPU Units with 30 I/O Points	CPU Units with 20 I/O Points	CPU Units with 14 I/O Points	CPU Units with 10 I/O Points		
CIO 0	00	Normal input 0	Normal input 0	Normal input 0	Normal input 0	Normal input 0	Normal input 0	---	---
	01	Normal input 1	Normal input 1	Normal input 1	Normal input 1	Normal input 1	Normal input 1	---	---
	02	Normal input 2	Normal input 2	Normal input 2	Normal input 2	Normal input 2	Normal input 2	---	---
	03	Normal input 3	Normal input 3	Normal input 3	Normal input 3	Normal input 3	Normal input 3	---	---
	04	Normal input 4	Normal input 4	Normal input 4	Normal input 4	Normal input 4	Normal input 4	Input interrupt 0	Interrupt task 140
	05	Normal input 5	Normal input 5	Normal input 5	Normal input 5	Normal input 5	Normal input 5	Input interrupt 1	Interrupt task 141
	06	Normal input 6	Normal input 6	Normal input 6	Normal input 6	Normal input 6	---	Input interrupt 2**	Interrupt task 142**
	07	Normal input 7	Normal input 7	Normal input 7	Normal input 7	Normal input 7	---	Input interrupt 3**	Interrupt task 143**
	08	Normal input 8	Normal input 8	Normal input 8	Normal input 8	---	---	Input interrupt 4*	Interrupt task 144*
	09	Normal input 9	Normal input 9	Normal input 9	Normal input 9	---	---	Input interrupt 5*	Interrupt task 145*
	10	Normal input 10	Normal input 10	Normal input 10	Normal input 10	---	---	---	---
	11	Normal input 11	Normal input 11	Normal input 11	Normal input 11	---	---	---	---
CIO 1	00 to 05	Normal input 12 to 17	Normal input 12 to 17	Normal input 12 to 17	---	---	---	---	---
	06 to 11	Normal inputs 18 to 23	Normal inputs 18 to 23	---	---	---	---	---	---
CIO 2	00 to 11	Normal inputs 24 to 35	---	---	---	---	---	---	---

Note *Input interrupts 4 and 5 are not supported by CPU Units with 10 or 14 I/O Points.

**Input interrupts 2 and 3 are not supported by CPU Units with 10 I/O Points.

Procedure

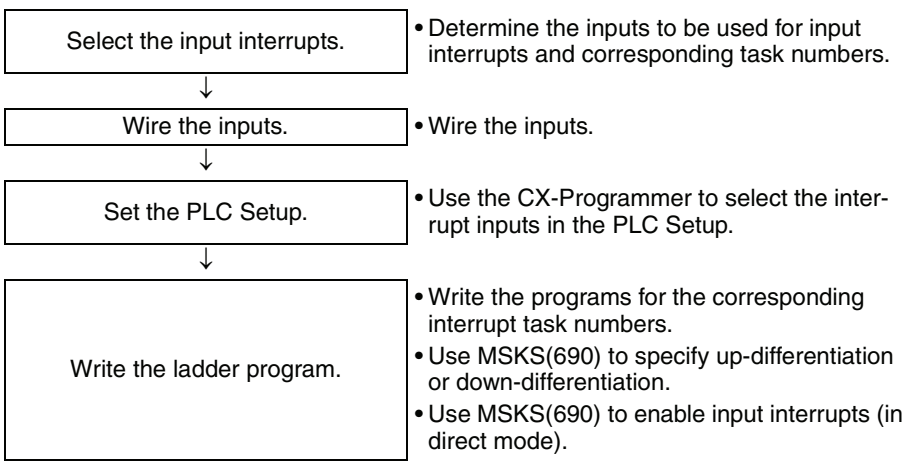

PLC Setup

Click the Built-in Input Tab to display the *Interrupt Input* settings (at the bottom of the tab). Set the input function to *Interrupt* for each input that will be used as an input interrupt.

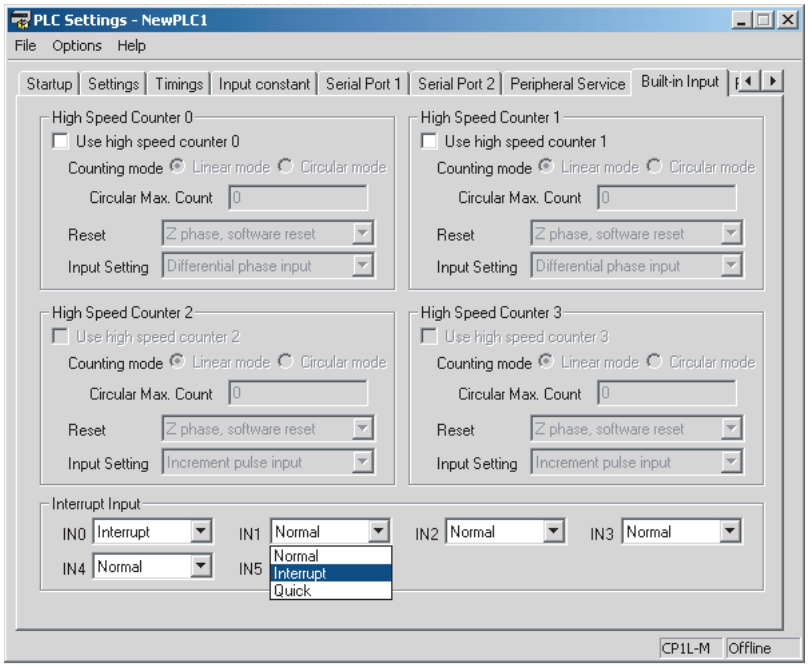

Note

(1) Interrupt Input settings IN0 to IN7 correspond to input interrupt numbers 0 to 7.

(2) When using an input as a general-purpose (normal) input, set the input function to *Normal*.

Writing the Ladder Program

MSKS(690) Settings

The MSKS(690) instruction must be executed in order to use input interrupts. The settings made with MSKS(690) are enabled with just one execution, so in general execute MSKS(690) in just one cycle using an up-differentiated condition.

MSKS(690) has the following two functions and two of the instructions are used in combination. If an up-differentiated input interrupt is being used, the first MSKS(690) instruction can be omitted since the input is set for up-differentiation by default.

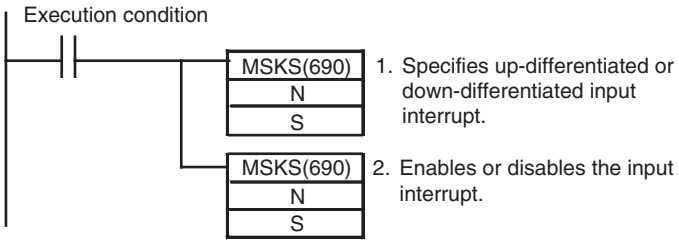

MSKS(690) Operands

Input interrupt number	Interrupt task number	1. Up-differentiation or Down-differentiation		2. Enabling/Disabling the input interrupt	
		N	S	N	S
		Input interrupt number	Execution condition	Input interrupt number	Enable/ Disable
Input interrupt 0	140	110 (or 10)	#0: Up-differentiated #1: Down-differentiated	100 (or 6)	#0: Enable interrupt #1: Disable interrupt
Input interrupt 1	141	111 (or 11)		101 (or 7)	
Input interrupt 2**	142	112 (or 12)		102 (or 8)	
Input interrupt 3**	143	113 (or 13)		103 (or 9)	
Input interrupt 4*	144	114		104	
Input interrupt 5*	145	115		105	

Note *Input interrupts 4 and 5 are not supported by the CPU Units with 10 or 14 I/O Points.

**Input interrupts 2 and 3 are not supported by the CPU Units with 10 I/O Points.

Writing the Interrupt Task's Program

Create programs for interrupt tasks 140 to 145, which are executed by the corresponding input interrupt. Always put an END(001) instruction at the last address of the program.

Input Interrupt Settings and Operation

This example shows how to execute interrupt task 140 when input CIO 0.04 goes ON.

Settings

1,2,3...

1. Connect an input device to input 0.04.
2. Use the CX-Programmer to set input 0 as an input interrupt in the PLC Setup.
3. Use the CX-Programmer to create the program to use for interrupt processing and allocate the program to interrupt task 140.
4. Use the CX-Programmer to write MSKS(690) in the program.

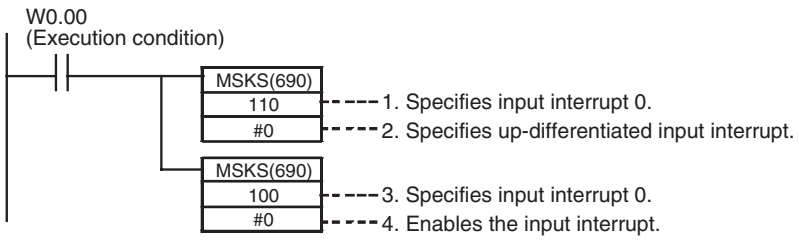

Operation

When execution condition W0.00 goes ON, MSKS(690) is executed to enable CIO 0.04 as an up-differentiated input interrupt.

If CIO 0.04 goes from OFF to ON (up-differentiation), processing of the cyclic task that is currently being executed will be interrupted and processing of interrupt task 140 will start. When the interrupt task processing is completed, processing of the interrupted ladder program will restart.

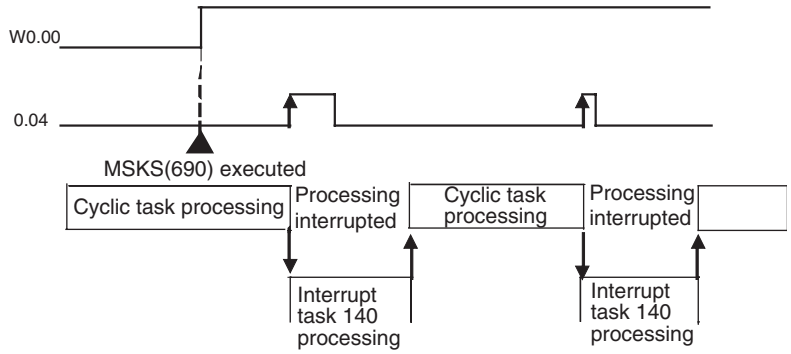

Restrictions

Inputs cannot be used for input interrupts when they are being used as general-purpose (normal) inputs or quick-response inputs.

6-1-3 Input Interrupts (Counter Mode)

Overview

This function counts up-differentiated or down-differentiated input signals and executes an interrupt task when the count reaches the set value.

- The counter-mode input interrupts use the same input terminals as the direct-mode input interrupts. Refer to *6-1-2 Input Interrupts (Direct Mode)* for details.
- The counter input mode can be set to up or down (incrementing or decrementing) with MSKS(690).
- The counter-mode input interrupts start the same interrupt tasks (140 to 145) as the direct-mode input interrupts.
- The maximum input response frequency is 5 kHz total for all counter-mode input interrupts.

Relationship of Input Bits, Task Numbers, and Counters

Input bits	Function		Counter words	
	Input interrupt number	Interrupt task number	SV (0000 to FFFF)	PV
0.04	Input interrupt 0	140	A532	A536
0.05	Input interrupt 1	141	A533	A537
0.06**	Input interrupt 2**	142	A534	A538
0.07**	Input interrupt 3**	143	A535	A539
0.08*	Input interrupt 4*	144	A544	A548
0.09*	Input interrupt 5*	145	A545	A549

Note *Input interrupts 4 and 5 are not supported by CPU Units with 10 or 14 I/O Points.

**Input interrupts 2 and 3 are not supported by CPU Units with 10 I/O Points.

Procedure

Select the input interrupts (counter mode).	• Determine the inputs to be used for input interrupts and corresponding task numbers.
↓	
Wire the inputs.	• Wire the inputs.
↓	
Set the PLC Setup.	• Use the CX-Programmer to select the interrupt inputs in the PLC Setup.
↓	
Set the counter SVs.	• Set the interrupt counter SVs in the corresponding AR Area words.
↓	
Write the ladder program.	• Write the programs for the corresponding interrupt task numbers. • Use MSKS(690) to specify up-differentiation or down-differentiation. • Use MSKS(690) to enable input interrupts (in counter mode).

Note The input interrupt (counter mode) function is one of the input interrupt functions and executes an interrupt based on the pulse count. If the input pulse frequency is too high, interrupts will occur too frequently and prevent normal cyclic task processing. In this case, cycle time too long errors may occur or the pulse input may not be read.

The maximum total frequency of the counter-mode interrupt inputs is 5 kHz. Even in this case, the high frequencies may adversely affect other devices' operation or the system load, so check the system's operation thoroughly before using the counters at high frequencies.

PLC Setup

The procedures for using the CX-Programmer to set the PLC Setup are the same as the procedures for input interrupts (direct mode). Refer to *6-1-2 Input Interrupts (Direct Mode)* for details.

Writing the Ladder Program

MSKS(690) Settings

The MSKS(690) instruction must be executed in order to use input interrupts. The settings made with MSKS(690) are enabled with just one execution, so in general execute MSKS(690) in just one cycle using an up-differentiated condition.

MSKS(690) has the following two functions and three of the instructions are used in combination. If up-differentiated input pulses are being used, the first MSKS(690) instruction can be omitted since the input is set for up-differentiation by default.

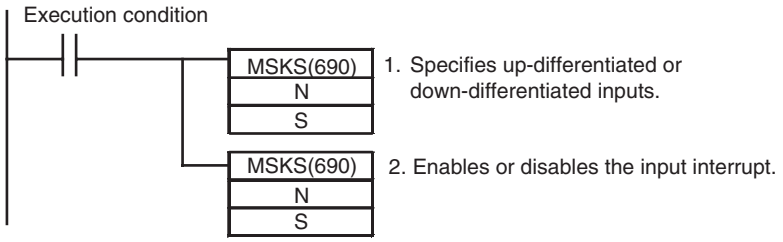

MSKS(690) Operands

Input interrupt number	Interrupt task muber Count	1. Up-differentiation or Down-differentiation		2. Enabling/Disabling the input interrupt	
		N	S	N	S
		Input interrupt number	Count trigger	Input interrupt number	Enable/ Disable
Input interrupt 0	140	110 (or 10)	#0: Up-differentiated pulses #1: Down-differentiated pulses	100 (or 6)	#2: Start counting down (decrementing) and enable interrupts #3: Start counting up (incrementing) and enable interrupts
Input interrupt 1	141	111 (or 11)		101 (or 7)	
Input interrupt 2**	142**	112 (or 12)		102 (or 8)	
Input interrupt 3**	143**	113 (or 13)		103 (or 9)	
Input interrupt 4*	144*	114		104	
Input interrupt 5*	145*	115		105	

Note *Input interrupts 4 and 5 are not supported by CPU Units with 10 or 14 I/O Points.

**Input interrupts 2 and 3 are not supported by CPU Units with 10 I/O Points.

Writing the Interrupt Task's Program

Create programs for interrupt tasks 140 to 145, which are executed by the corresponding input interrupt. Always put an END(001) instruction at the last address of the program.

Input Interrupt Settings and Operation

This example shows how to execute interrupt task 141 when 200 up-differentiated pulses have been counted at input CIO 0.05. (The counter is an incrementing counter.)

Settings

1,2,3...

1. Connect an input device to input 0.05.
2. Use the CX-Programmer to set input 0.05 as an input interrupt in the PLC Setup.
3. Use the CX-Programmer to create the program to use for interrupt processing and allocate the program to interrupt task 141.
4. Use the CX-Programmer to set a high-speed counter SV of 00C8 hex (200 decimal) in A533.
5. Use the CX-Programmer to write MSKS(690) in the program.

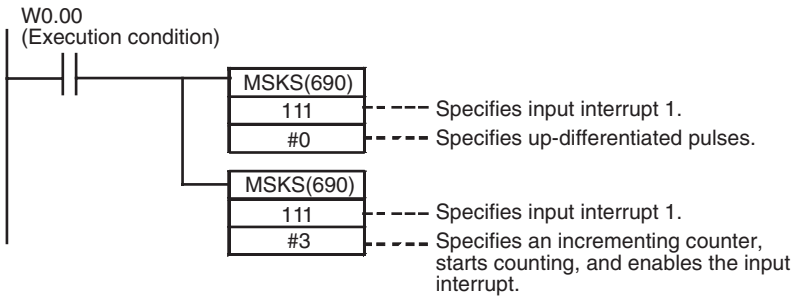

Operation

When execution condition W0.00 goes ON, MSKS(690) is executed to enable operation of the input interrupt in counter mode.

When CIO 0.05 goes from OFF to ON 200 times, processing of the cyclic task that is currently being executed will be interrupted and processing of interrupt task 141 will start. When the interrupt task processing is completed, processing of the interrupted ladder program will restart.

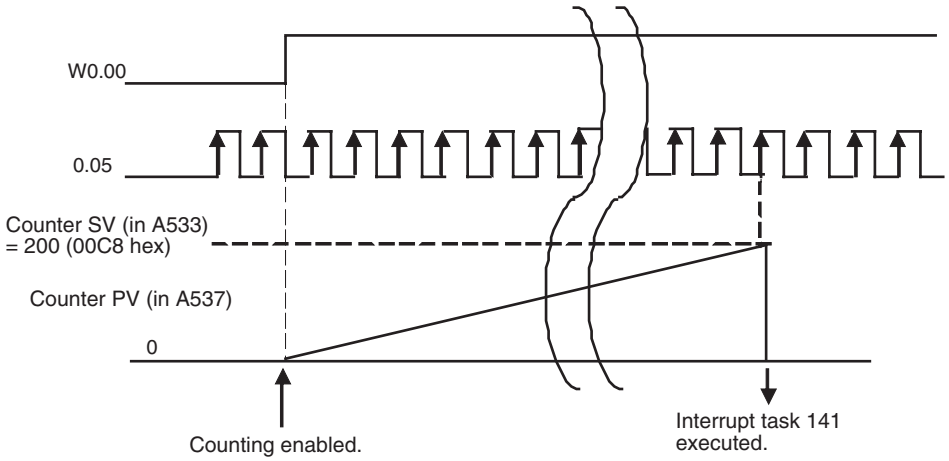

Restrictions

Inputs cannot be used for input interrupts when they are being used as general-purpose (normal) inputs or quick-response inputs.

6-1-4 Scheduled Interrupts

This function executes an interrupt task at a fixed time interval measured by the CPU Unit's built-in timer. Interrupt task 2 is allocated to scheduled interrupt.

Procedure

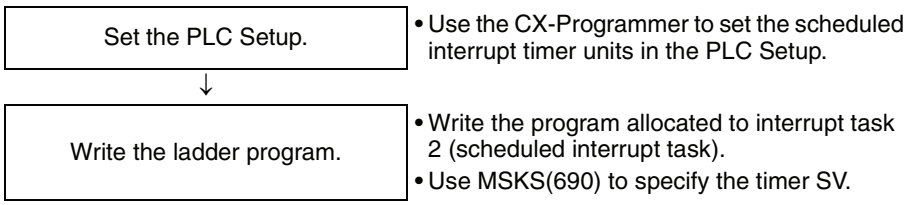

PLC Setup

Click the **Timings** Tab and set the input function to *Scheduled Interrupt Interval* (the scheduled interrupt timer's units). The timing units can be set to 10 ms, 1 ms, or 0.1 ms. The scheduled interrupt timer SV is calculated by multiplying this interval setting by the timer SV set with MSKS(690).

Scheduled Interrupt Interval Setting

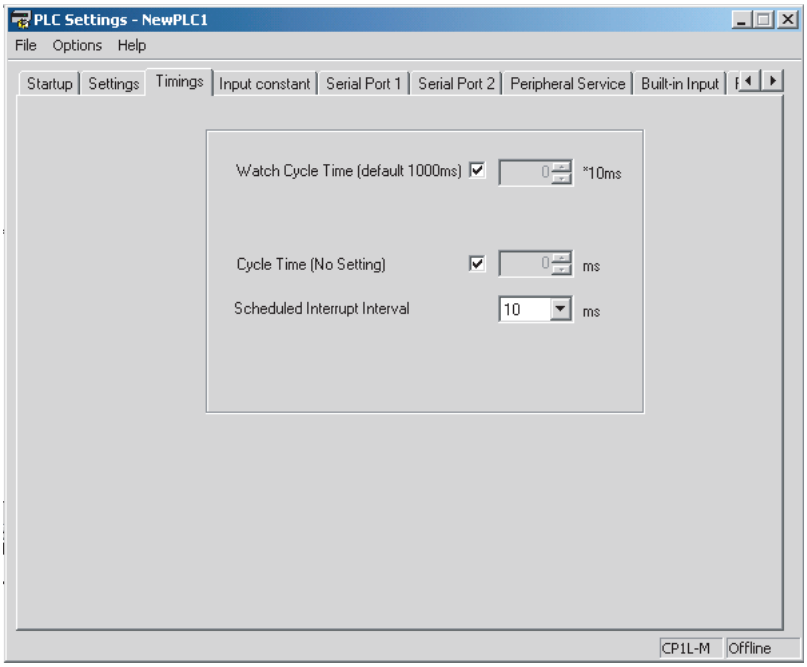

Note

(1) Set a scheduled interrupt time (interval) that is longer than the time required to execute the corresponding interrupt task.

(2) If the scheduled time interval is too short, the scheduled interrupt task will be executed too frequently, which may cause a long cycle time and adversely affect the cyclic task processing.

(3) If an interrupt task is being executed for another interrupt (input interrupt, high-speed counter interrupt, or external interrupt) when the scheduled interrupt occurs, the scheduled interrupt will not be executed until the other interrupt task is completed.
When different kinds of interrupts are being used, design the program to handle multiple interrupts smoothly. Even if two interrupts occur at the same time, the scheduled interrupts will continue as programmed, so the scheduled interrupt tasks will continue to occur at the scheduled times even if specific scheduled interrupts are delayed.

Writing the Ladder Program

MSKS(690) Settings

The MSKS(690) instruction must be executed in order to use the scheduled interrupt. The settings made with MSKS(690) are enabled with just one execution, so in general execute MSKS(690) in just one cycle using an up-differentiated condition.

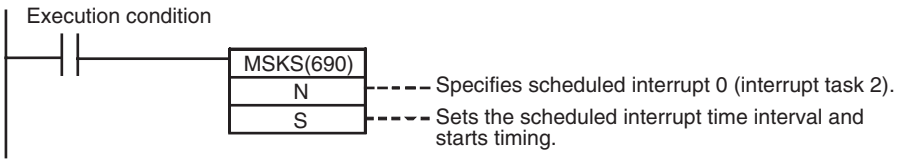

MSKS(690) Operands

Operand		Interrupt time interval (period)	
N	S	Time units set in PLC Setup	Scheduled time interval
Scheduled interrupt number	Interrupt time		
Scheduled interrupt 0 (interrupt task 2) 14: Reset start 4: Start without reset	#0000 to #270F (0 to 9999)	10 ms	10 to 99,990 ms
		1 ms	1 to 9,999 ms
		0.1 ms	0.5 to 999.9 ms

Writing the Scheduled Interrupt Task's Program

Create the program for interrupt task 2 (scheduled interrupt 0), which is executed by the input interrupt. Always put an END(001) instruction at the last address of the program.

Selecting the Scheduled Interrupt Task

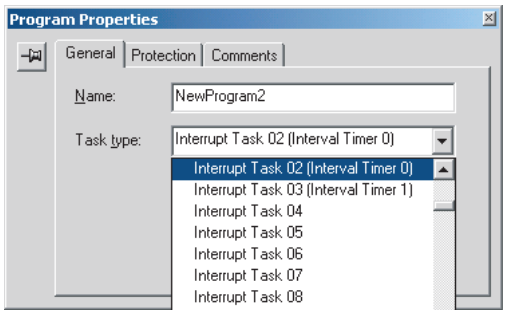

Input Interrupt Settings and Operation

This example shows how to execute interrupt task 2 at 30.5 ms intervals.

Settings

1,2,3...

1. Use the CX-Programmer to set the scheduled interrupt time units to 0.1 ms.
2. Use the CX-Programmer to create the interrupt program allocated to interrupt task 2.

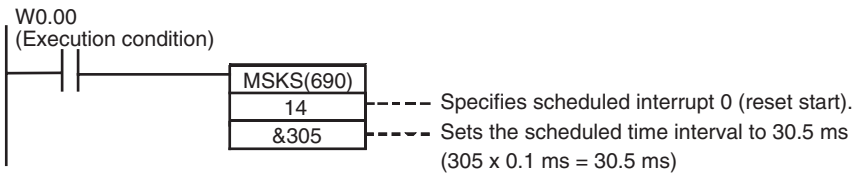

Operation

When execution condition W0.00 goes ON, MSKS(690) is executed to enable the scheduled interrupt with the reset start specified. The timer is reset and timing starts.

Scheduled interrupt 2 is executed every 30.5 ms.

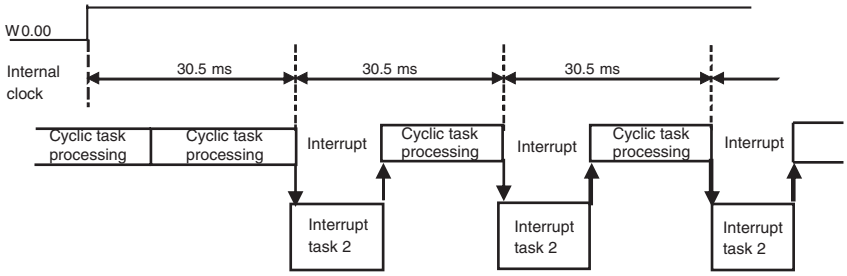

6-1-5 High-speed Counter Interrupts

This function executes the specified interrupt task (0 to 255) when the CP1L CPU Unit's built-in high-speed counter PV matches a pre-registered value (target value comparison) or lies within a pre-registered range (range comparison).

- CTBL(882) is used to register the comparison table.
- Either CTBL(882) or INI(880) can be used to start comparison.
- INI(880) is used to stop comparison.

For details on the built-in high-speed counter, refer to *5-1 High-speed Counters*.

Procedure

Set the PLC Setup.	• Using the CX-Programmer, set the PLC Setup so that the built-in input is used for a high-speed counter.
↓	
Wire the inputs.	• Wire the input being used for the high-speed counter.
↓	
Write the ladder program.	• Write the interrupt task program. • Use CTBL(882) to register the high-speed counter number and comparison table. Create the comparison table's data in advance.

PLC Setup

Click the **Built-in Input** Tab to and set the high-speed counters that will be used for interrupts.

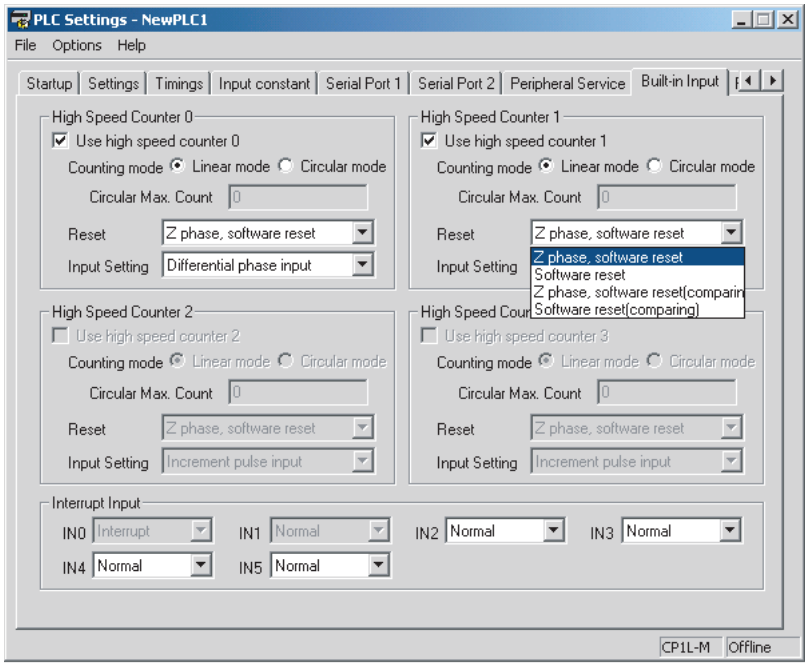

Settings

Item	Setting
Use high speed counter 0 to 3	Use counter
Counting mode	Linear mode
	Circular mode (ring mode)
Circular Max. Count	0 to FFFF FFFF hex (When circular (ring) mode is selected as the counting mode, set maximum ring value here.)
Reset method	Phase Z and software reset
	Software reset
	Phase Z and software reset (continue comparing)
	Software reset (continue comparing)
Input Setting	Differential phase inputs (4x)
	Pulse + direction inputs
	Up/Down inputs
	Increment pulse input

Input Function Settings According the PLC Setup Setting

If the built-in inputs are set to be used as high-speed counters 0 to 3, the function of the input bits will change as shown in the following table. If a high-speed counter is set to be used, the bits in CIO 0 and CIO 1 can no longer be used for normal inputs, input interrupts, or quick-response inputs.

■ **CPU Units with 20, 30, 40 or 60 I/O Points**

Address		Default setting				High-speed counter operation settings:		
Word	**Bit**	**CPU Units with 60 I/O Points**	**CPU Units with 40 I/O Points**	**CPU Units with 30 I/O Points**	**CPU Units with 20 I/O Points**	**Single-phase (increment pulse input)**	**Two-phase (differential phases x4, up/down, or pulse/direction)**	**Origin searches**
CIO 0	00	Normal input 0	Normal input 0	Normal input 0	Normal input 0	Counter 0, increment input	Counter 0, A phase, up, or count input	---
	01	Normal input 1	Normal input 1	Normal input 1	Normal input 1	Counter 1, increment input	Counter 0, B phase, down, or direction input	---
	02	Normal input 2	Normal input 2	Normal input 2	Normal input 2	Counter 2, increment input	Counter 1, A phase, up, or count input	---
	03	Normal input 3	Normal input 3	Normal input 3	Normal input 3	Counter 3, increment input	Counter 1, B phase, down, or direction input	---
	04	Normal input 4	Normal input 4	Normal input 4	Normal input 4	Counter 0, phase-Z reset input	Counter 0, phase-Z reset input	---
	05	Normal input 5	Normal input 5	Normal input 5	Normal input 5	Counter 1, phase-Z reset input	Counter 1, phase-Z reset input	---
	06	Normal input 6	Normal input 6	Normal input 6	Normal input 6	Counter 2, phase-Z reset input	---	Pulse output 0: Origin input signal
	07	Normal input 7	Normal input 7	Normal input 7	Normal input 7	Counter 3, phase-Z reset input	---	Pulse output 1: Origin input signal
	08	Normal input 8	Normal input 8	Normal input 8	Normal input 8	---	---	---
	09	Normal input 9	Normal input 9	Normal input 9	Normal input 9	---	---	---
	10	Normal input 10	Normal input 10	Normal input 10	Normal input 10	---	---	Pulse output 0: Origin proximity input signal
	11	Normal input 11	Normal input 11	Normal input 11	Normal input 11	---	---	Pulse output 1: Origin proximity input signal
CIO 1	00 to 05	Normal input 12 to 17	Normal input 12 to 17	Normal input 12 to 17	---	---	---	---
	06 to 11	Normal input 18 to 23	Normal input 18 to 23	---	---	---	---	---
CIO 2	00 to 11	Normal input 24 to 35	---	---	---	---	---	---

■ CPU Units with 14 I/O Points

Input terminal block		Default setting	High-speed counter settings		
Word	Bit		Single-phase (increment pulse input)	Two-phase (differential phase x4, up/down, or pulse/direction)	Origin searches
CIO 0	00	Normal input 0	High-speed counter 0: Increment input	High-speed counter 0: Phase A, Increment, or Count input	---
	01	Normal input 1	High-speed counter 1: Increment input	High-speed counter 0: Phase B, Decrement, or Direction input	---
	02	Normal input 2	High-speed counter 2: Increment input	High-speed counter 1: Phase A, Increment, or Count input	Pulse output 0: Origin proximity input signal
	03	Normal input 3	High-speed counter 3: Increment input	High-speed counter 1: Phase B, Decrement, or Direction input	Pulse output 1: Origin proximity input signal
	04	Normal input 4	High-speed counter 0: Phase Z or reset input	High-speed counter 0: Phase Z or reset input	---
	05	Normal input 5	High-speed counter 1: Phase Z or reset input	High-speed counter 1: Phase Z or reset input	---
	06	Normal input 6	High-speed counter 2: Phase Z or reset input	---	Pulse output 0: Origin input signal
	07	Normal input 7	High-speed counter 3: Phase Z or reset input	---	Pulse output 1: Origin input signal

■ CPU Units with 10 I/O Points

Address		Default setting	High-speed counter Operation settings:		
Word	Bit		Single-phase (increment pulse input)	Two-phase (differential phase x4, up/down, or pulse/direction)	Origin searches
CIO 0	00	Normal input 0	Counter 0, increment input	Counter 0, A phase, up, or count input	---
	01	Normal input 1	Counter 1, increment input	Counter 0, B phase, down, or direction input	---
	02	Normal input 2	Counter 2, increment input	Counter 1, A phase, up, or count input	---
	03	Normal input 3	Counter 3, increment input	Counter 1, B phase, down, or direction input	Pulse output 0: Origin proximity input signal
	04	Normal input 4	Counter 0, phase-Z reset input	Counter 0, phase-Z reset input	---
	05	Normal input 5	Counter 1, phase-Z reset input	Counter 1, phase-Z reset input	Pulse output 0: Origin input signal

High-speed Counter Memory Areas

Content		High-speed counter	
		0	1
PV	Leftmost 4 digits	A271	A273
	Rightmost 4 digits	A270	A272
Range Comparison Condition Met Flags	ON for match in range 1	A274.00	A275.00
	ON for match in range 2	A274.01	A275.01
	ON for match in range 3	A274.02	A275.02
	ON for match in range 4	A274.03	A275.03
	ON for match in range 5	A274.04	A275.04
	ON for match in range 6	A274.05	A275.05
	ON for match in range 7	A274.06	A275.06
	ON for match in range 8	A274.07	A275.07
Comparison In-progress Flags	ON while the comparison is in progress.	A274.08	A275.08
Overflow/Underflow Flags	ON if a PV overflow or underflow occurred while operating in linear mode.	A274.09	A275.09
Count Direction Flags	0: Decrementing 1: Incrementing	A274.10	A275.10

Note The comparison table and comparison conditions 1 to 8 are different for target-value comparison and range comparison operations. For details, refer to next page.

REGISTER COMPARISON TABLE Instruction: CTBL(882)

CTBL(882) compares the PV of a high-speed counter (0 to 3) to target values or target value ranges and executes the corresponding interrupt task (0 to 255) when the specified condition is met.

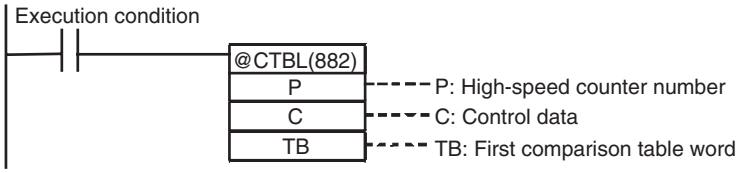

Operand		Settings	
P	High-speed counter number	#0000	High-speed counter 0
		#0001	High-speed counter 1
C	Control data	#0000	Registers a target-value comparison table and starts the comparison operation.
		#0001	Registers a range comparison table and starts the comparison operation.
		#0002	Registers a target-value comparison table.
		#0003	Registers a range comparison table.
TB	First comparison table word	Specifies the leading word address of the comparison table, which is described below.	

Contents of the Comparison Table

Target-value Comparison Table

Depending on the number of target values in the table, the target-value comparison table requires a continuous block of 4 to 145 words.

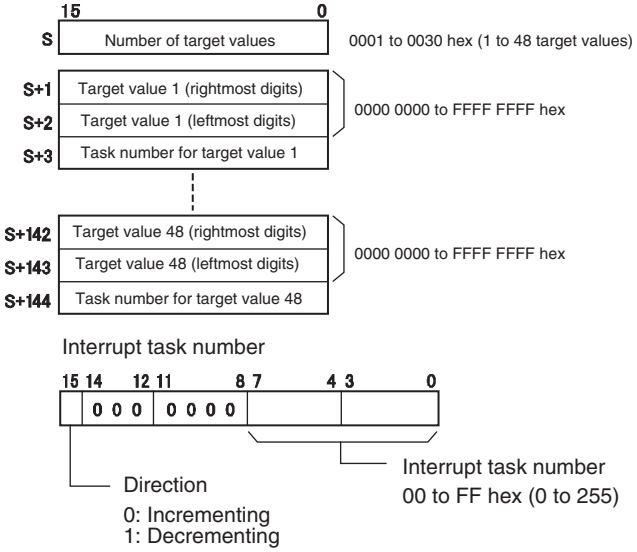

Range Comparison Table

The range comparison table requires a continuous block of 40 words because comparison conditions 1 to 8 require 5 words each (2 words for the upper range value, 2 words for the lower range value, and one word for the interrupt task number).

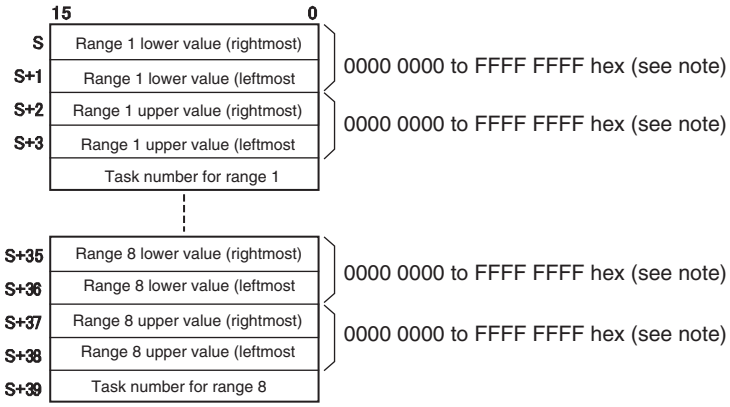

Interrupt task number: 0000 to 00FF hex (0 to 255)
AAAA hex: Do not start interrupt task
FFFF hex: Disables that range's settings.

Note Always set the upper limit greater than or equal to the lower limit in each range.

MODE CONTROL Instruction: INI(880)

INI(880) can be used to start/stop comparison with the high-speed counter's comparison table, change the high-speed counter's PV, change the PV of interrupt inputs in counter mode, and control the pulse output functions.

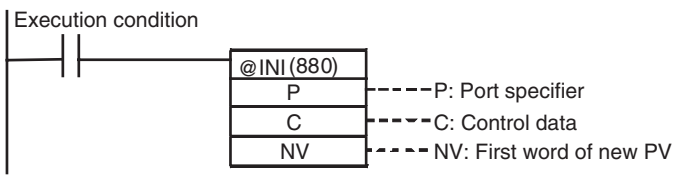

Operand		Settings	
P	Port specifier	#0000, #0001	Pulse outputs 0 or 1
		#0010	High-speed counter 0
		#0011	High-speed counter 1
		#0100 to #0105	Input interrupts 0 to 5 (in counter mode)
		#1000 or #1001	PWM(891) output 0 or 1
C	Control data	#0000	Start comparison.
		#0001	Stop comparison.
		#0002	Change the PV.
		#0003	Stop pulse output.
NV	First word of new PV	NV and NV+1 contain the new PV when C is set to #0002 (change the PV).	

New PV Setting in NV and NV+1

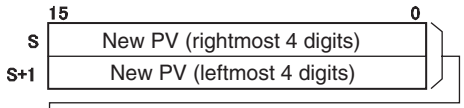

Setting range for pulse outputs and high-speed counter inputs:
0000 0000 to FFFF FFFF hex

Setting range for input interrupts (counter mode):
0000 0000 to 0000 FFFF hex

Ladder Program Examples

Example 1: High-speed Counter (Linear Mode)

In this example, high-speed counter 0 operates in linear mode and starts interrupt task 10 when the PV reaches 30,000 (0000 7530 hex).

1,2,3... 1. Set high-speed counter 0 in the PLC Setup's Built-in Input Tab.

Item	Setting
High-speed counter 0	Use counter
Counting mode	Linear mode
Circular Max. Count	---
Reset method	Software reset
Input Setting	Up/Down inputs

2. Set the target-value comparison table in words D10000 to D10003.

Word	Setting	Function	
D10000	#0001	Number of target values = 1	
D10001	#7530	Rightmost 4 digits of the target value 1 data	Target value = 30,000 (0000 7530 hex)
D10002	#0000	Leftmost 4 digits of the target value 1 data	
D10003	#000A	Bit 15: 0 (incrementing) Bits 0 to 7: A hex (interrupt task number 10)	

3. Create the program for interrupt task 10. Always put an END(001) instruction at the program's last address.

4. Use CTBL(882) to start the comparison operation with high-speed counter 0 and interrupt task 10.

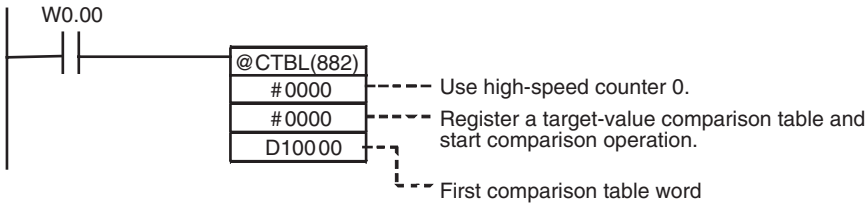

5. Operation

When execution condition W0.00 goes ON, the comparison starts with high-speed counter 0.

When the PV of high speed counter 0 reaches 30,000, cyclic task processing is interrupted, and interrupt task 10 is processed. When interrupt task 10 processing is completed, processing of the interrupted cyclic task resumes.

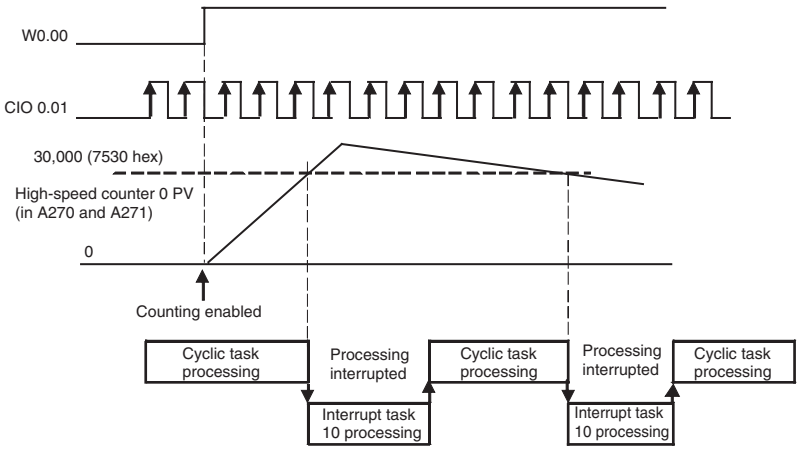

Example 2: High-speed Counter (Ring Mode)

In this example, high-speed counter 1 operates in circular (ring) mode and starts interrupt task 12 when the PV is between 25,000 (0000 61A8 hex) and 25,500 (0000 639C hex).

The maximum ring count is set at 50,000 (0000 C350 hex).

1,2,3... 1. Set high-speed counter 1 in the PLC Setup's Built-in Input Tab.

Item	Setting
High-speed counter 1	Use counter
Counting mode	Circular mode
Circular Max. Count	50,000
Reset method	Software reset (continue comparing)
Input Setting	Up/Down inputs

2. Set the range comparison table starting at word D20000. Even though range 1 is the only range being used, all 40 words must still be dedicated to the range comparison table.

Word	Setting	Function	
D20000	#61A8	Rightmost 4 digits of range 1 lower limit	Lower limit value: 25,000
D20001	#0000	Leftmost 4 digits of range 1 lower limit	
D20002	#639C	Rightmost 4 digits of range 1 upper limit	Upper limit value: 25,500
D20003	#0000	Leftmost 4 digits of range 1 upper limit	

Word	Setting	Function	
D20004	#000C	Range 1 interrupt task number = 12 (C hex)	
D20005 to D20008	All #0000	Range 2 lower and upper limit values (Not used and don't need to be set.)	Range 2 settings
D20009	#FFFF	Disables range 2.	
~			
D20014 D20019 D20024 D20029 D20034	#FFFF	Set the fifth word for ranges 3 to 7 (listed at left) to #FFFF to disable those ranges.	
~			
D20035 to D20038	All #0000	Range 8 lower and upper limit values (Not used and don't need to be set.)	Range 8 settings
D20039	#FFFF	Disables range 8.	

3. Create the program for interrupt task 12. Always put an END(001) instruction at the program's last address.
4. Use CTBL(882) to start the comparison operation with high-speed counter 1 and interrupt task 12.

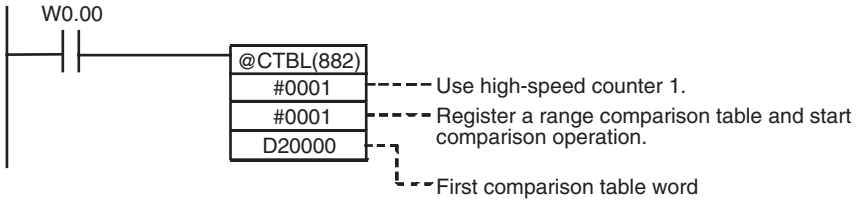

5. Operation

   When execution condition W0.00 goes ON, the comparison starts with high-speed counter 1.

   When the PV of high speed counter 1 is between 25,000 and 25,500, cyclic task processing is interrupted, and interrupt task 12 is processed. When interrupt task 12 processing is completed, processing of the interrupted cyclic task resumes.

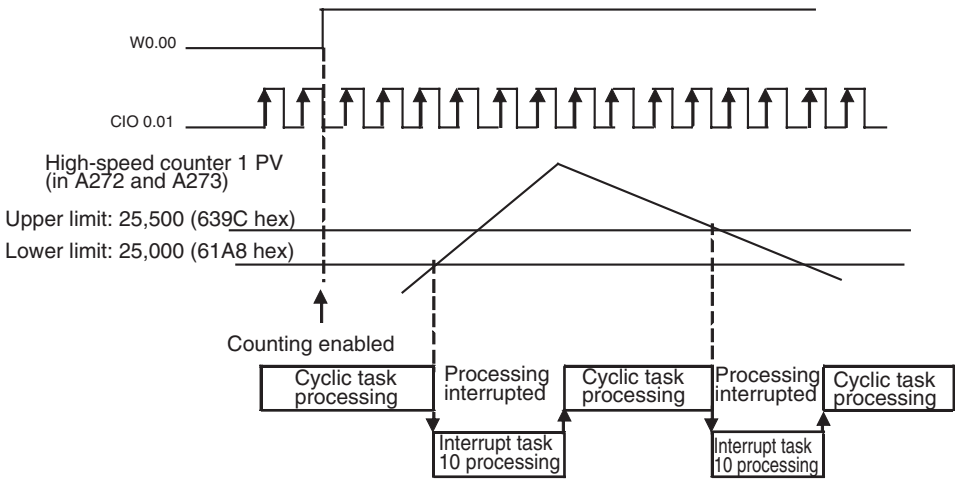

6-2 Quick-response Inputs

Overview

The quick-response inputs can read pulses with an ON time shorter than the cycle time (as short as 50 μs). Use the quick-response inputs to read signals shorter than the cycle time, such as inputs from photomicrosensors.

PLC Setup

Use the CX-Programmer to set a built-in input as a quick-response input in the PLC Setup. Click the Built-in Input Tab to display the *Interrupt Input* settings (at the bottom of the tab). Set the input function from *Normal* to *Quick* for each input that will be used as a quick-response input.

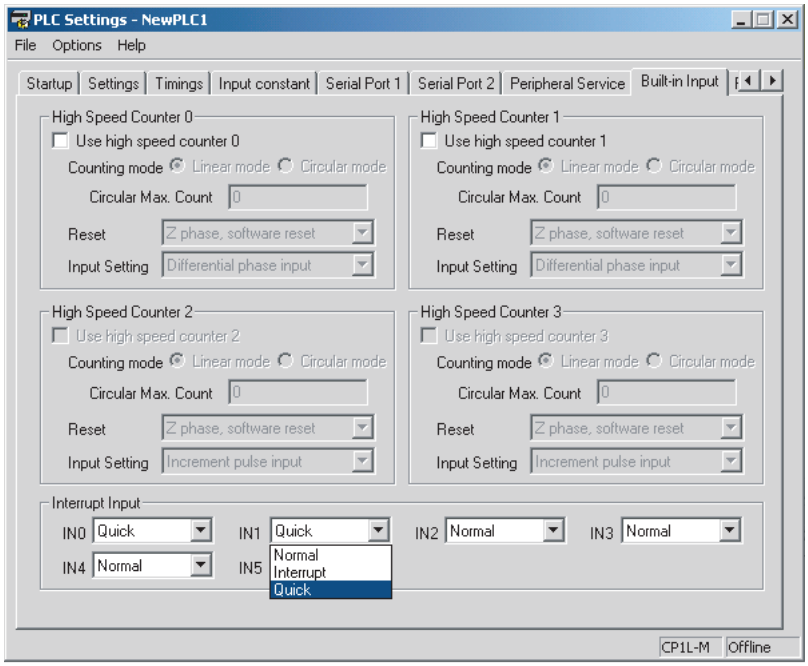

Bit Allocation for Quick-Response Inputs

CPU Units with 10 I/O Points

The following diagrams show the input bits and terminals that can be used for quick-response inputs in each CPU Unit.

The 2 input bits CIO 0.04 to CIO 0.05 can be used as quick-response inputs.

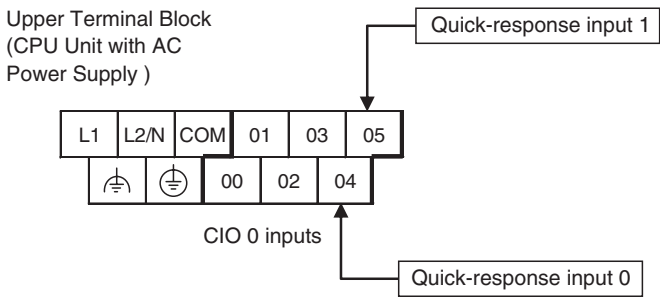

CPU Units with 14 I/O Points

The 4 input bits CIO 0.04 to CIO 0.07 can be used as quick-response inputs.

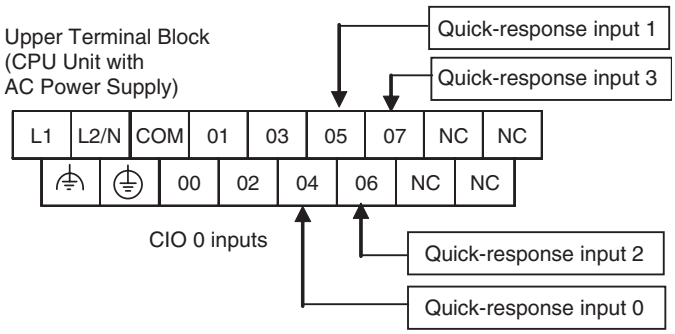

CPU Units with 20 I/O Points

The 6 input bits CIO 0.04 to CIO 0.09 can be used as quick-response inputs.

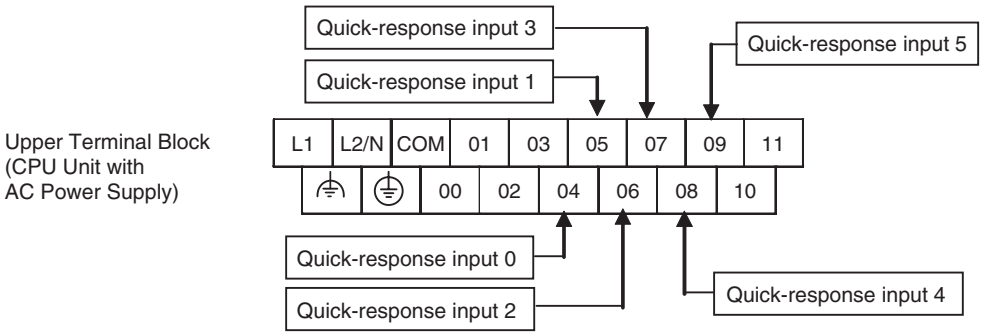

CPU Units with 30 I/O Points

The 6 input bits CIO 0.04 to CIO 0.09 can be used as quick-response inputs.

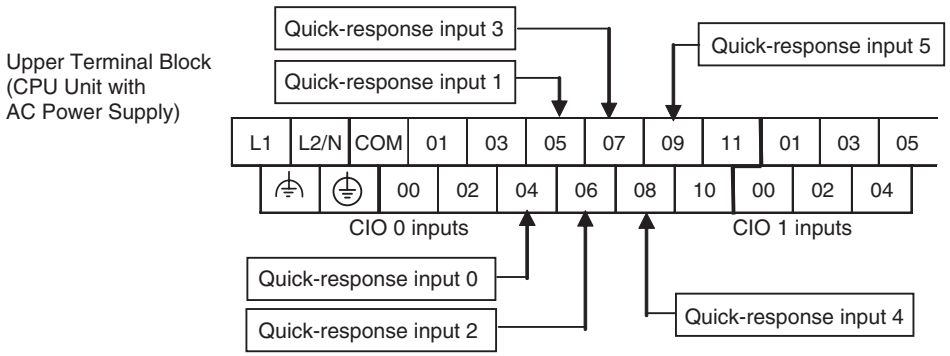

CPU Units with 40 I/O Points

The 6 input bits CIO 0.04 to CIO 0.09 can be used as quick-response inputs.

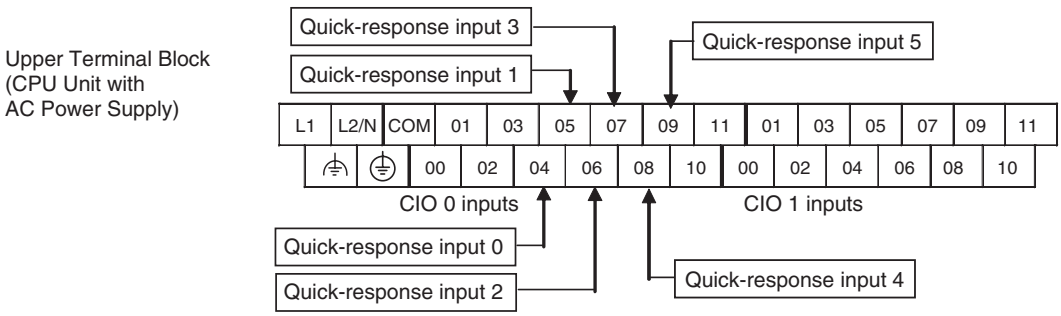

CPU Units with 60 I/O Points

The 6 input bits CIO 0.04 to CIO 0.09 can be used as quick-response inputs.

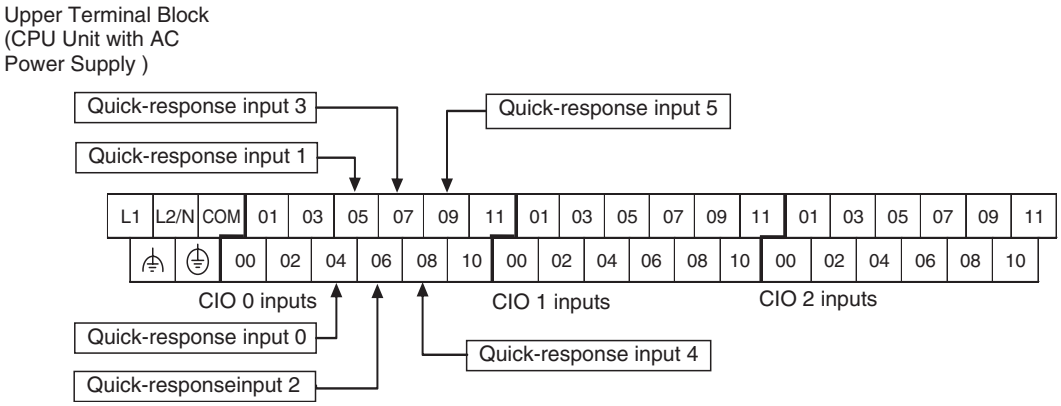

Setting the Input Functions in the PLC Setup

Normally, bits CIO 0.04 to CIO 0.09 are used as normal inputs. When using these inputs as quick-response inputs, use the CX-Programmer to change the input's setting in the PLC Setup.

Input terminal block		CPU Unit						Quick-response inputs
Word	Bit	CPU Units with 60 I/O Points	CPU Units with 40 I/O Points	CPU Units with 30 I/O Points	CPU Units with 20 I/O Points	CPU Units with 14 I/O Points	CPU Units with 10 I/O Points	
CIO 0	00	Normal input 0	Normal input 0	Normal input 0	Normal input 0	Normal input 0	Normal input 0	---
	01	Normal input 1	Normal input 1	Normal input 1	Normal input 1	Normal input 1	Normal input 1	---
	02	Normal input 2	Normal input 2	Normal input 2	Normal input 2	Normal input 2	Normal input 2	---
	03	Normal input 3	Normal input 3	Normal input 3	Normal input 3	Normal input 3	Normal input 3	---
	04	Normal input 4	Normal input 4	Normal input 4	Normal input 4	Normal input 4	Normal input 4	Quick-response input 0
	05	Normal input 5	Normal input 5	Normal input 5	Normal input 5	Normal input 5	Normal input 5	Quick-response input 1
	06	Normal input 6	Normal input 6	Normal input 6	Normal input 6	Normal input 6	---	Quick-response input 2**
	07	Normal input 7	Normal input 7	Normal input 7	Normal input 7	Normal input 7	---	Quick-response input 3**
	08	Normal input 8	Normal input 8	Normal input 8	Normal input 8	---	---	Quick-response input 4*
	09	Normal input 9	Normal input 9	Normal input 9	Normal input 9	---	---	Quick-response input 5*
	10	Normal input 10	Normal input 10	Normal input 10	Normal input 10	---	---	---
	11	Normal input 11	Normal input 11	Normal input 11	Normal input 11	---	---	---
CIO 1	00 to 05	Normal input 12 to 17	Normal input 12 to 17	Normal input 12 to 17	---	---	---	---
	06 to 11	Normal input 18 to 23	Normal input 18 to 23	---	---	---	---	---
CIO 2	00 to 11	Normal input 24 to 35	---	---	---	---	---	---

Note *Input interrupts 4 and 5 are not supported by CPU Units with 10 or 14 I/O Points.

**Input interrupts 2 and 3 are not supported by CPU Units with 10 I/O Points.

Interrupt Input and Quick-response Input Specifications

Item	Specification
ON delay	30 μs max.
OFF delay	150 μs max.
Response pulse	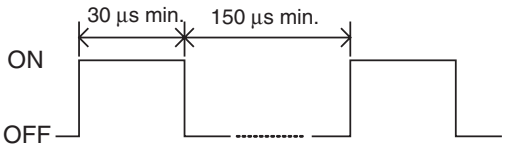

Procedure

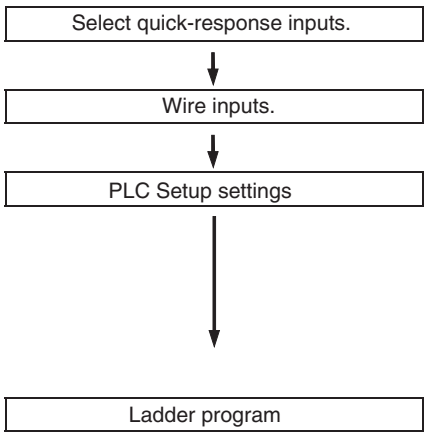

- When IN0 to IN5 are used as quick response inputs, set the corresponding built-in input's Interrupt Input setting to Quick in the PLC Setup's Built-in Input Tab.
- Use the quick-response inputs in instructions such as LD.

Restrictions

Inputs cannot be used as quick-response inputs when they are being used as general-purpose (normal) inputs, input interrupts, or high-speed counter inputs.

6-3 Serial Communications

6-3-1 Overview

The CP1L CPU Units support the following serial communications functions.

Protocol	Connected devices	Description	Serial port 1	Serial port 2
No-protocol	Standard devices supporting serial communications 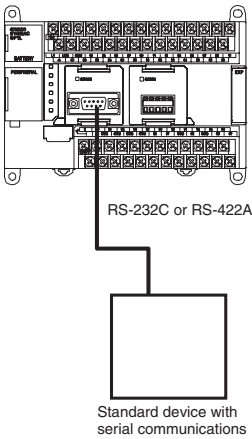 	Communicates with standard devices with an RS-232C or RS-422A/485 port without a command–response format. Instead the TXD(236) and RXD(235) instructions are executed from the program to transmit data from the transmission port or read data in the reception port. The frame headers and end codes can be specified.	OK	OK
Serial gateway (to CompoWay/F or Modbus-RTU)	OMRON components supporting CompoWay/F or Modbus-RTU slave devices 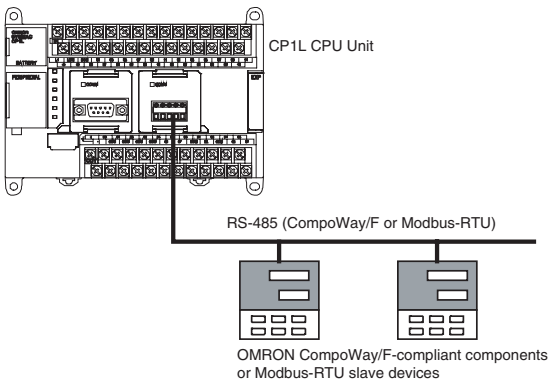 	Converts received FINS commands into CompoWay/F or Modbus-RTU commands and transfers them on the serial communications path.	OK	OK

Protocol	Connected devices	Description	Serial port 1	Serial port 2
Serial PLC Link	CP-series CPU Units or CJ1M CPU Units 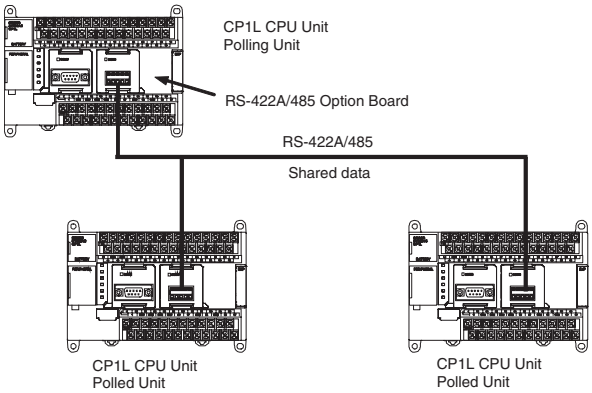 	Up to ten words per Unit can be shared by up to nine CPU Units, including one Polling Unit and eight Polled Units. An RS-422A/485 Option Boards (CP1W-CIF11/CIF12) are used to communicate via RS-422A/485, or RS-232C Option Boards (CP1W-CIF01) can be used to communicate between two CPU Units via an RS-232C connection. CJ1M CPU Units can also be included in Serial PLC Links, and the Serial PLC Links can also include PTs as Polled Units via 1:N NT Links. **Note** Serial PLC Links can be created on serial port 1 or serial port 2, but not on both ports at the same time.	OK	OK
1:N NT links (1:N NT Links are also used for 1:1 connections.)	OMRON PTs (Programmable Terminals) 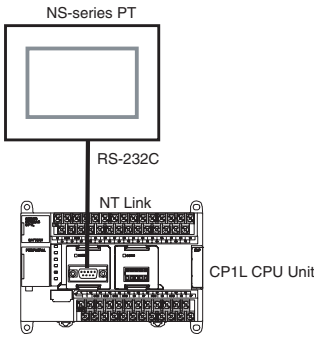 	Data can be exchanged with PTs without using a communications program in the CPU Unit.	OK	OK
Host Link	Host computer or OMRON PT (Programmable Terminal) 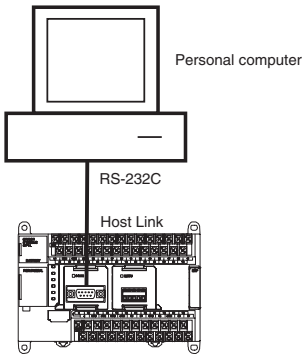 	1) Various control commands such as reading and writing I/O memory, changing the operating mode, and force-setting/resetting bits can be executed by sending C-mode host link commands or FINS commands from the host computer to the CPU Unit. 2) It is also possible to send FINS commands from the CPU Unit to the host computer to send data or information. Use Host Link communications to monitor data, such as operating status, error information, and quality data in the PLC or send data, such as production planning information, to the PLC.	OK	OK

Protocol	Connected devices	Description	Serial port 1	Serial port 2
Peripheral bus (toolbus)	CX-Programmer 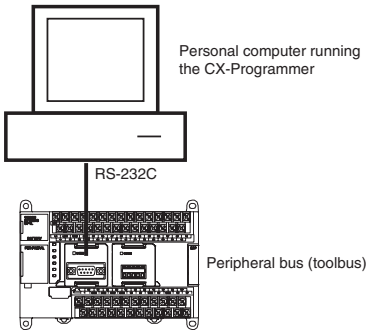	Provides high-speed communications with the CX-Programmer.	OK	OK
1:1 NT Links	OMRON PTs (Programmable Terminals) 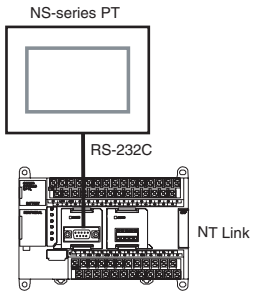	Enables data exchange with a PT without communications programming in the CPU Unit. (The 1:N NT Link protocol is used for communications even for 1:1 connections.)	OK	OK
1:1 Links	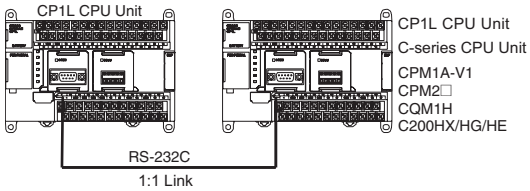	Enables linking data in a 64-word Link Area between two PLCs connected by an RS-232C cable.	OK	OK

6-3-2 No-protocol Communications

No-protocol communications enable sending and receiving data using the TRANSMIT (TXD(236)) and RECEIVE (RXD(235)) instructions without using a protocol and without data conversion (e.g., no retry processing, data type conversion, or process branching based on received data). The communications mode for the serial port must be set for no-protocol communications in the PLC Setup.

No-protocol communications are used to send data in one direction to or from standard devices that have an RS-232C or RS-422A/485 port using TXD(236) or RXD(235).

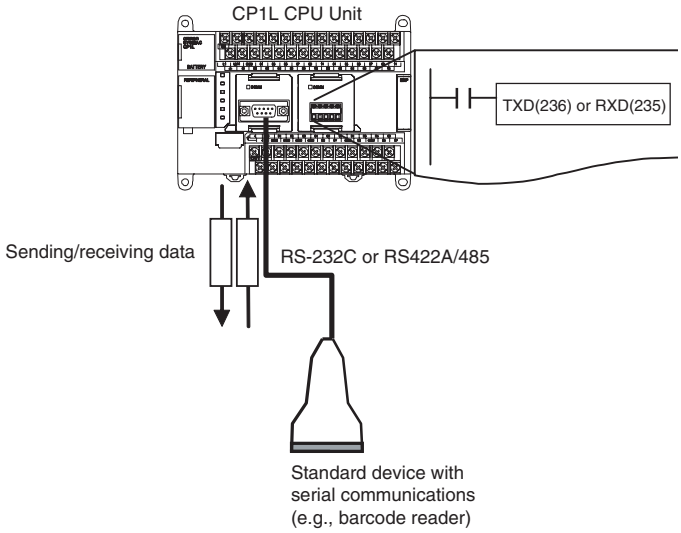

For example, simple (non-protocol) communications can be used to input data from a barcode reader or output data to a printer.

The following table lists the no-protocol communication functions supported by CP1L PLCs.

Transfer direction	Method	Max. amount of data	Frame format		Other functions
			Start code	End code	
Data transmission (PLC → External device)	Execution of TXD(236) in the program	256 bytes	Yes: 00 to FF No: None	Yes: 00 to FF or CR+LF No: None (The amount of data to receive is specified between 1 and 256 bytes when no end code is specified.)	• Send delay time (delay between TXD(236) execution and sending data from specified port): 0 to 99,990 ms (unit: 10 ms) • Controlling RS and ER signals
Data reception (External device → PLC)	Execution of RXD(235) in the program	256 bytes			Monitoring CS and DR signals

Procedure

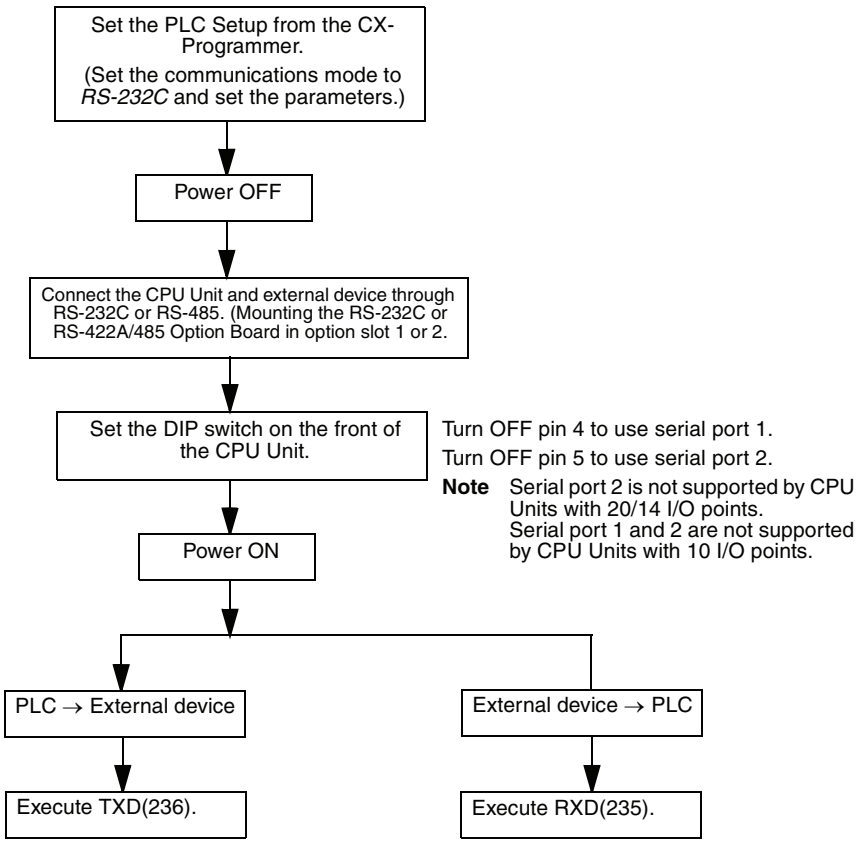

Message Frame Formats

Data can be placed between a start code and end code for transmission by TXD(236) and data between a start code and end code can be received by RXD(235). When transmitting with TXD(236), data from I/O memory is transmitted, and when receiving with RXD(235), the data (without start/end codes) is stored in I/O memory. Up to 256 bytes (including the start and end codes) can be transferred in no-protocol mode.

The start and end codes are set in the PLC Setup.

The following table shows the message formats that can be set for transmissions and receptions in no-protocol mode.

Start code	End code		
	No	**Yes**	**CR+LF**
No	data 256 bytes max.	data ED 256 bytes max.	data CR+F 256 bytes max.
Yes	ST data 256 bytes max.	ST data ED 256 bytes max.	ST data CR+LF 256 bytes max.

- When more than one start code is used, the first start code will be effective.
- When more than one end code is used, the first end code will be effective.
- If the data being transferred contains the end code, the data transfer will be stopped midway. In this case, change the end code to CR+LF.

Note A setting can be made to delay the transmission of data after the execution of TXD(236).

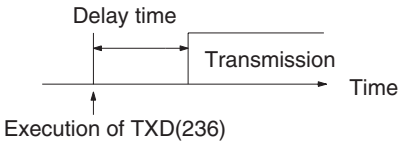

Refer to the *SYSMAC CP Series CP1L CPU Unit Programming Manual* (W451) for more details on TXD(236) and RXD(235).

6-3-3 Modbus-RTU Easy Master Function

Overview

If an RS-232C or RS-422A/485 Option Board is used, the CP1L CPU Unit can function as a Modbus-RTU Master to send Modbus-RTU commands by manipulating software switches. This enables easily controlling Modbus-compliant slaves, such as Inverters, through serial communications.

The following OMRON Inverters support Modbus-RTU slave operation: 3G3JV, 3G3MV, and 3G3RV.

The communications mode in the PLC Setup must be set to the Gateway Mode to enable this functionality.

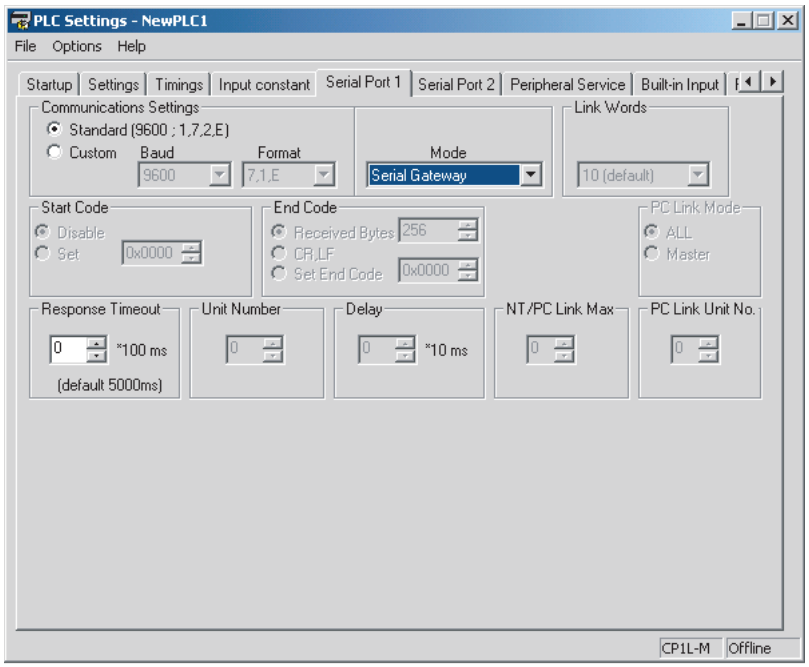

Modbus-RTU commands can be set simply by turning ON a software switch after setting the Modbus slave address, function, and data in the DM fixed allocation words for the Modbus-RTU Easy Master. The response when received is also store in the DM fixed allocation words for the Modbus-RTU Easy Master.

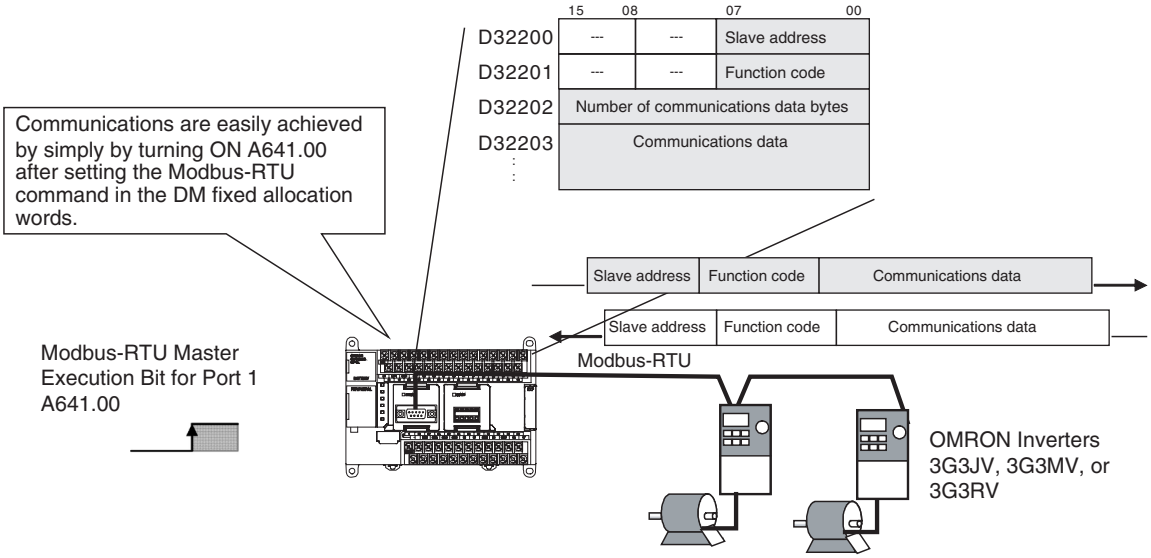

DM Fixed Allocation Words for the Modbus-RTU Easy Master

The Modbus-RTU command is stored in the following words in the DM Area.

- M-type CPU Units
  Serial port 1: D32200 to D32249
  Serial port 2: D32300 to D32349
- L-type CPU Units
  Serial port 1: D32300 to D32349

When a response is received after turning ON the Modbus-RTU Master Execution Bit, it is sotred in the following words in the DM Area.

- M-type CPU Units
  Serial port 1: D32250 to D32299
  Serial port 2: D32350 to D32399
- L-type CPU Units
  Serial port 1: D32350 to D32399

Words		Bits	Contents	
Serial port 1 on M-type CPU Unit	**Serial port 2 on M-type CPU Unit or Serial port 1 on L-type CPU Unit**			
D32200	D32300	00 to 07	Command	Slave address (00 to F7 hex)
		08 to 15		Reserved (Always 00.)
D32201	D32301	00 to 07		Function code
		08 to 15		Reserved (Always 00.)
D32202	D32302	00 to 15		Number of communications data bytes (0000 to 005E hex)
D32203 to D32249	D32303 to D32349	00 to 15		Communications data (94 bytes maximum)

Words		Bits	Contents	
Serial port 1 on M-type CPU Unit	**Serial port 2 on M-type CPU Unit or Serial port 1 on L-type CPU Unit**			
D32250	D32350	00 to 07	Response	Slave address (00 to F7 hex)
		08 to 15		Reserved (Always 00.)
D32251	D32351	00 to 07		Function code
		08 to 15		Reserved
D32252	D32352	00 to 07		Error code
		08 to 15		Reserved (Always 00.)
D32253	D32353	00 to 15		Number of response bytes (0000 to 03EA hex)
D32254 to D32299	D32354 to D32399	00 to 15		Response data (92 bytes maximum)

Error Codes

The following error codes are stored in an allocated DM Area word when an error occurs in Modbus-RTU Easy Master function execution.

Code	Name	Description
0x00	Normal end	Not an error.
0x01	Illegal address	The slave address specified in the parameter is illegal (248 or higher).
0x02	Illegal function code	The function code specified in the parameter is illegal.
0x03	Data length overflow	There are more than 94 data bytes.
0x04	Serial communications mode error	The Modbus-RTU Easy Master function was executed when the serial communications mode was not the Serial Gateway Mode.
0x80	Response timeout	A response was not received from the Servo.
0x81	Parity error	A parity error occurred.
0x82	Framing error	A framing error occurred.
0x83	Overrun error	An overrun error occurred.
0x84	CRC error	A CRC error occurred.
0x85	Incorrect confirmation address	The slave address in the response is difference from the one in the request.
0x86	Incorrect confirmation function code	The function code in the response is difference from the one in the request.
0x87	Response size overflow	The response frame is larger than the storage area (92 bytes).
0x88	Exception response	An exception response was received from the slave.
0x89	Service being executed	A service is already being executed (reception traffic congestion).
0x8A	Execution canceled	Executing the service has been canceled.
0x8f	Other error	Other FINS response code was received.

Auxiliary Area Flags and Bits

The Modbus-RTU command set in the DM fixed allocation words for the Modbus-RTU Easy Master is automatically sent when the Modbus-RTU Master Execution Bit is turned ON. The results (normal or error) will be given in corresponding flags.

Word	Bit	Port	Contents
A640	00	M-type CPU Units: Serial port 2 L-type CPU Units: Serial port 1	Modbus-RTU Master Execution Bit Turned ON: Execution started ON: Execution in progress. OFF: Not executed or execution completed.
	01		Modbus-RTU Master Execution Normal Flag ON: Execution normal. OFF: Execution error or still in progress.
	02		Modbus-RTU Master Execution Error Flag ON: Execution error. OFF: Execution normal or still in progress.
A641	00	M-type CPU Unit: Serial port 1	Modbus-RTU Master Execution Bit Turned ON: Execution started ON: Execution in progress. OFF: Not executed or execution completed.
	01		Modbus-RTU Master Execution Normal Flag ON: Execution normal. OFF: Execution error or still in progress.
	02		Modbus-RTU Master Execution Error Flag ON: Execution error. OFF: Execution normal or still in progress.

6-3-4 Communications: Smart Active Parts and Function Blocks

Overview

OMRON components that support CompoWay/F communications or Modbus-RTU slave functionality (such as Temperature Controllers) can be easily accessed from a CP1L CPU Unit equipped with an RS-422A/485 or RS-232C Option Board using Smart Active Parts (SAPs) on an NS-series PT or using function blocks in the ladder program in the CP1L CPU Unit.

The communications mode in the PLC Setup must be set to the Gateway Mode to enable this functionality.

System Configuration

Using SAPs from an NS-series PT	Using Function Blocks in CPU Unit
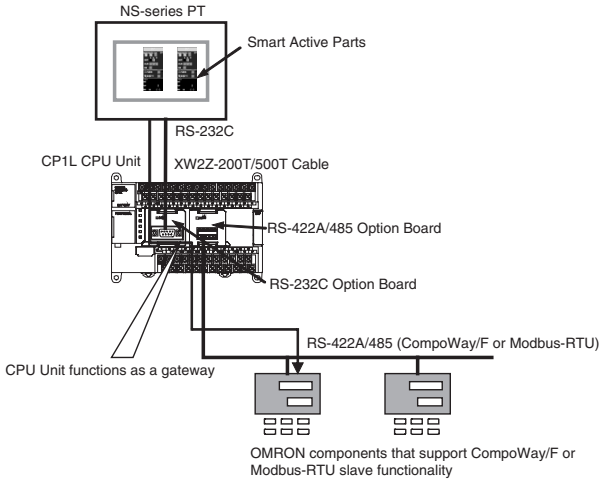	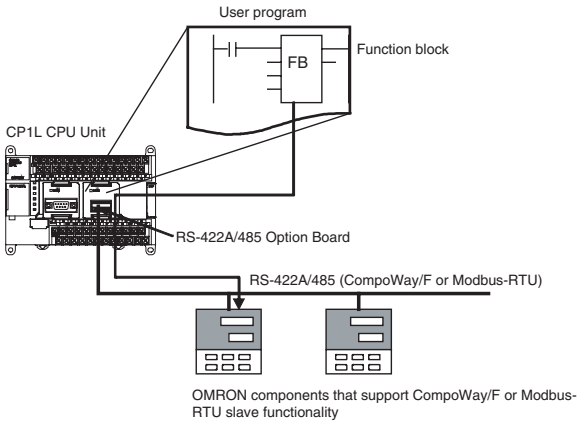

Note Refer to OMRON's Smart Library website for the most recent information on using SAPs and function blocks.

Serial Gateway Function

When a FINS command is received, it is automatically converted to the protocol corresponding to the message and sent on the serial communications path. Responses are also converted in the same way.

Note Serial ports 1 and 2 on the CP1L CPU Unit can be used to convert to the following protocols.

- CompoWay/F
- Modbus-RTU

This functionality is enabled when the serial communications mode is set to *Serial Gateway*.

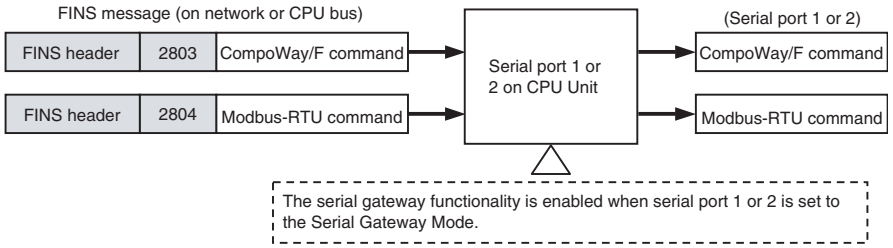

Contents of FINS Header

- Destination network address (DNA)
  a. When the routing table for network control of serial communication channel is developed:
     It is the network address that corresponds to serial communication port according to the routing table.
  b. When the routing table for networking serial communication channel is not developed:
     It is the network address when actual destination PLC is specified.
- Destination node address (DA1)
  a. When the routing table for network control of serial communication channel is developed:
     00Hex (means PLC internal communication)
  b. When the routing table for network control of serial communication channel is not developed:
     It is the node address when actual destination PLC is specified.
- Destination model address (DA2)
  It needs to be the model address of serial communication port.

  CP1L CPU Unit with 30,40 or 60 I/O Points

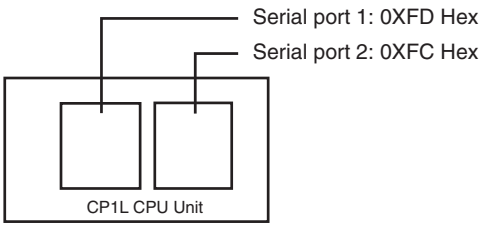

Serial communication port of CP1L	Model address of serial communication port
Serial port 1	FD Hex (decimal 253)
Serial port 2	FC Hex (decimal 252)

CP1L CPU Unit with 14 or 20 I/O Points

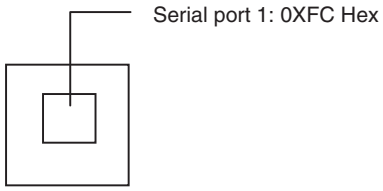

Serial communication port of CP1L	Model address of serial communication port
Serial port 1	FC Hex (decimal 252)

CPU Unit Serial Gateway Function Specifications

Item	Specification
Pre-conversion data	FINS (via FINS network, Host Link FINS, toolbus, NT Link, or CPU bus)
Conversion functions	FINS commands addressed to serial port 1 or 2 on the CPU Unit are converted to CompoWay/F commands (after removing the header) if the FINS command code is 2803 hex and to Modbus-RTU commands (after removing the header) if the FINS command code is 2804 hex.
Post-conversion data	CompoWay/F command or Modbus-RTU command
Serial communications method	1:N half-duplex
Maximum number of nodes	31
Enabling serial communications mode	Serial Gateway Mode
Response timeout	The time from when a message converted to a different protocol is set until a response is received is monitored by the serial gateway function. Default: 5 s, User setting: 0.1 to 25.5 s **Note** A FINS response code of 0205 hex (response timeout) is sent to the source of the FINS command if a timeout occurs.
Send delay function	None

Note If a CJ-series Serial Communications Unit is connected via a CJ Unit Adapter, messages can also be converted to Modbus-ASCII or Host Link FINS. Refer to the *SYSMAC CS/CJ Series Serial Communications Boards/Units Operation Manual* (W336) for details.

6-3-5 Serial PLC Links

Overview

Serial PLC Links can be used to allow data to be exchanged among CP1L and CJ1M CPU Units via the RS-422A/485 or RS-232C Option Boards mounted to the CPU Units without requiring special programming. The communications mode in the PLC Setup must be set to the Serial PLC Link Mode to enable this functionality.

- Either serial port 1 or 2 can be used. (See note.)
- Words are allocated in memory in the Serial PLC Link Words (CIO 3100 to CIO 3199).
- A maximum of 10 words can be transferred by each CP1L CPU Unit, but the number of linked words can be set to fewer words. (The size must be the same for all CP1L CPU Units.)

Note Serial PLC Links cannot be used on serial ports 1 and 2 at the same time. If one port is set as a Serial PLC Link slave or master, it will not be possible to set the other port for a Serial PLC Link. A PLC Setup error will occur if an attempt is made to set both ports for Serial PLC Links.

Configuration

1:N Connections between CP1L/CJ1M CPU Units (8 Nodes Maximum)

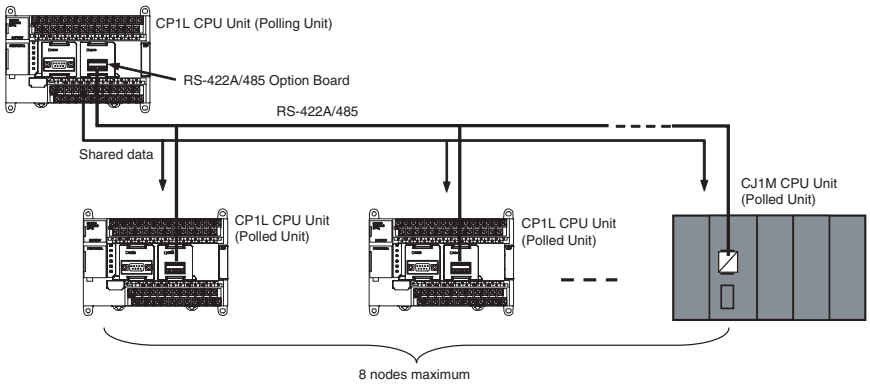

1:1 Connections between CP1L/CJ1M CPU Units

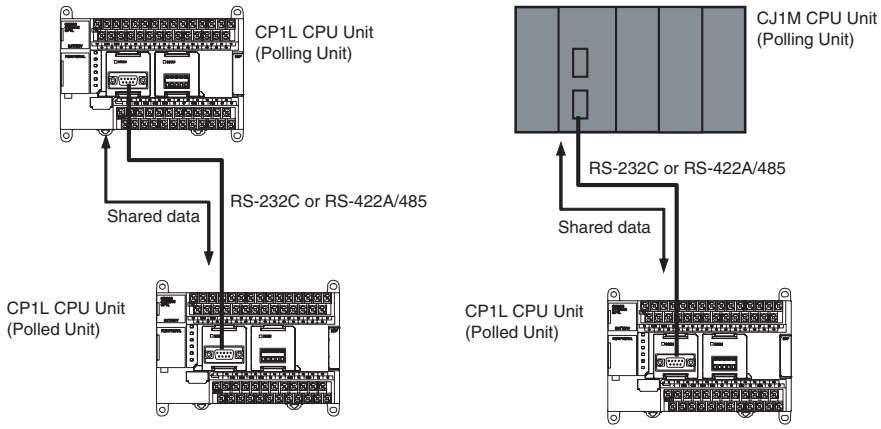

Specifications

Item	Specifications
Applicable serial ports	Serial port 1 or 2. Both ports cannot be used for PLC Links at the same time. If both ports are set for PLC Links (either as polling node or polled node), a PLC Setup setting error (non-fatal error) will occur and the PLC Setup Setting Error Flag (A402.10) will turn ON.
Connection method	RS-422A/485 or RS-232C connection via RS-422A/485 or RS-232C Option Board.
Allocated data area	Serial PLC Link Words: CIO 3100 to CIO 3199 (Up to 10 words can be allocated for each CPU Unit.)
Number of Units	9 Units max., comprising 1 Polling Unit and 8 Polled Units (A PT can be placed on the same network in an 1:N NT Link, but it must be counted as one of the 8 Polled Units.)
Link methods (data refresh methods)	Complete link method or Polling Unit link method

Data Refresh Methods

The following two methods can be used to refresh data.

- Complete link method
- Polling Unit link method

Complete Link Method

The data from all nodes in the Serial PLC Links are reflected in both the Polling Unit and the Polled Units. (The only exceptions are the address allocated

to the connected PT's unit number and the addresses of Polled Units that are not present in the network. These data areas are undefined in all nodes.)

Example: Complete Link Method, Highest Unit Number: 3

In the following diagram, Polled Unit No. 2 is either a PT or is a Unit not present in the network, so the area allocated for Polled Unit No. 2 is undefined in all nodes.

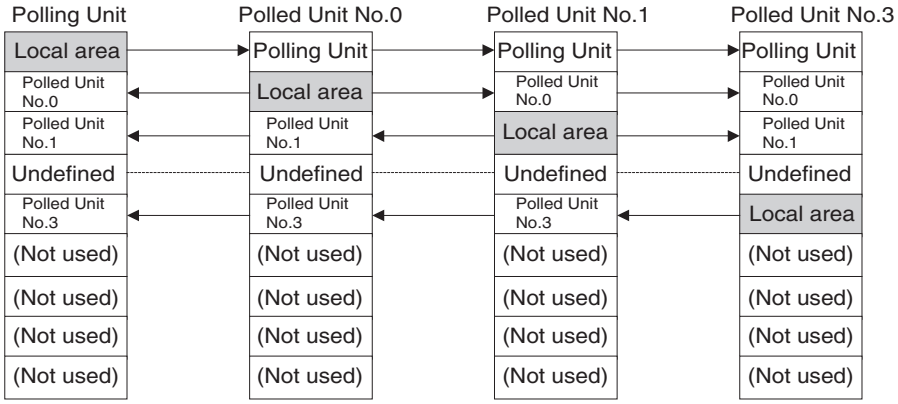

Example: Complete Link Method, Number of Link Words: 10

Each CPU Unit (either CP1L or CJ1M) sends data to the same words in all other CPU Units for the Polling Unit and all Polled Units. The Polling Unit is a CP1L CPU Unit in the following example, but it could also be a CJ1M CPU Unit.

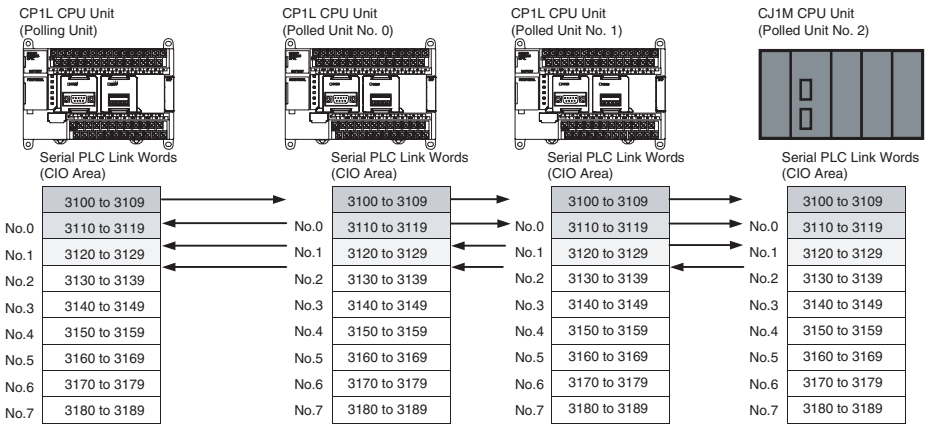

Polling Unit Link Method

The data for all the Polled Units in the Serial PLC Links ar reflected in the Polling Unit only, and each Polled Unit reflects the data of the Polling Unit only. The advantage of the Polling Unit link method is that the addresses allocated for the local Polled Unit data are the same in each Polled Unit, allowing data to be accessed using common ladder programming. The areas allocated for the unit numbers of the PT or Polled Units not present in the network are undefined in the Polling Unit only.

Example: Polling Unit Link Method, Highest Unit Number: 3

In the following diagram, Polled Unit No. 2 is a PT or a Unit not participating in the network, so the corresponding area in the Polling Unit is undefined.

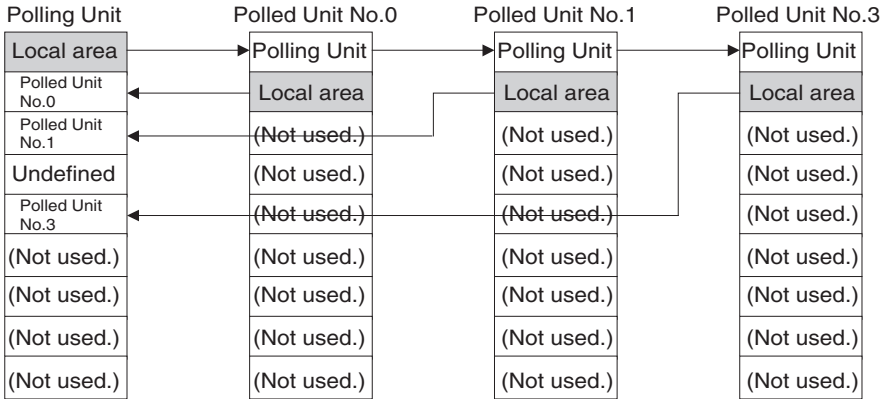

Example: Polling Unit Link Method, Number of Link Words: 10

The CPU Unit that is the Polling Unit (either CP1L or CJ1M) sends its data (CIO 3100 to CIO 3109) to the same words (CIO 3100 to CIO 3109) in all other CPU Units. The Polled Units send their data (CIO 3110 to CIO 3119) to consecutive sets of 10 words in the Polling Unit. The Polling Units is a CP1L CPU Unit in the following example, but it could also be a CJ1M CPU Unit. (Only the first three Polled Units are shown below.)

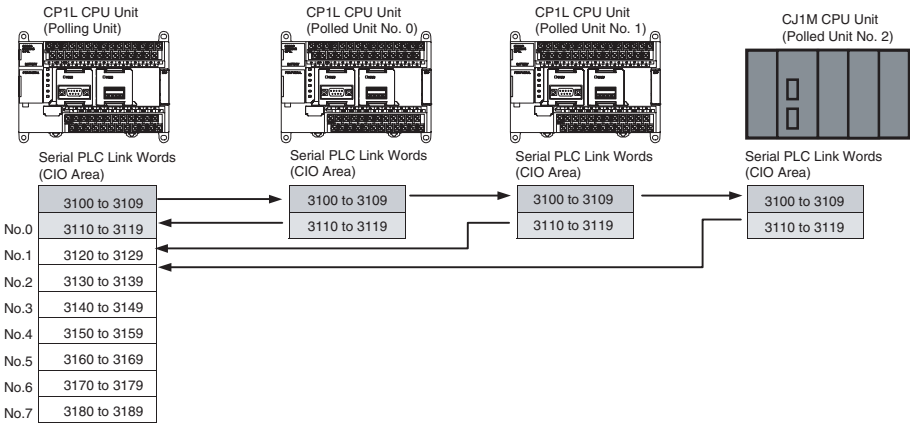

Allocated Words

Complete Link Method

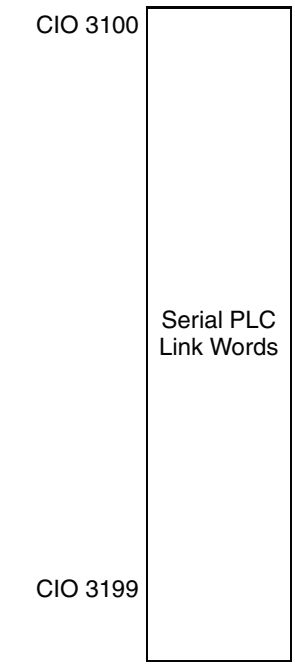

Link words	1 word	2 words	3 words	to	10 words
Polling Unit	CIO 3100	CIO 3100 to CIO 3101	CIO 3100 to CIO 3102		CIO 3100 to CIO 3109
Polled Unit No. 0	CIO 3101	CIO 3102 to CIO 3103	CIO 3103 to CIO 3105		CIO 3110 to CIO 3119
Polled Unit No. 1	CIO 3102	CIO 3104 to CIO 3105	CIO 3106 to CIO 3108		CIO 3120 to CIO 3129
Polled Unit No. 2	CIO 3103	CIO 3106 to CIO 3107	CIO 3109 to CIO 3111		CIO 3130 to CIO 3139
Polled Unit No. 3	CIO 3104	CIO 3108 to CIO 3109	CIO 3112 to CIO 3114		CIO 3140 to CIO 3149
Polled Unit No. 4	CIO 3105	CIO 3110 to CIO 3111	CIO 3115 to CIO 3117		CIO 3150 to CIO 3159
Polled Unit No. 5	CIO 3106	CIO 3112 to CIO 3113	CIO 3118 to CIO 3120		CIO 3160 to CIO 3169
Polled Unit No. 6	CIO 3107	CIO 3114 to CIO 3115	CIO 3121 to CIO 3123		CIO 3170 to CIO 3179
Polled Unit No. 7	CIO 3108	CIO 3116 to CIO 3117	CIO 3124 to CIO 3126		CIO 3180 to CIO 3189
Not used.	CIO 3109 to CIO 3199	CIO 3118 to CIO 3199	CIO 3127 to CIO 3199		CIO 3190 to CIO 3199

Polling Unit Link Method

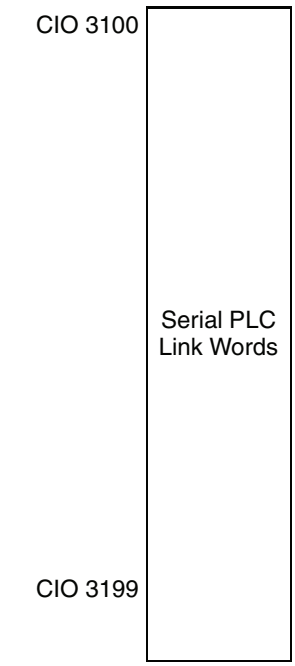

Link words	1 word	2 words	3 words	to	10 words
Polling Unit	CIO 3100	CIO 3100 to CIO 3101	CIO 3100 to CIO 3102		CIO 3100 to CIO 3109
Polled Unit No. 0	CIO 3101	CIO 3102 to CIO 3103	CIO 3103 to CIO 3105		CIO 3110 to CIO 3119
Polled Unit No. 1	CIO 3101	CIO 3102 to CIO 3103	CIO 3103 to CIO 3105		CIO 3110 to CIO 3119
Polled Unit No. 2	CIO 3101	CIO 3102 to CIO 3103	CIO 3103 to CIO 3105		CIO 3110 to CIO 3119
Polled Unit No. 3	CIO 3101	CIO 3102 to CIO 3103	CIO 3103 to CIO 3105		CIO 3110 to CIO 3119
Polled Unit No. 4	CIO 3101	CIO 3102 to CIO 3103	CIO 3103 to CIO 3105		CIO 3110 to CIO 3119
Polled Unit No. 5	CIO 3101	CIO 3102 to CIO 3103	CIO 3103 to CIO 3105		CIO 3110 to CIO 3119
Polled Unit No. 6	CIO 3101	CIO 3102 to CIO 3103	CIO 3103 to CIO 3105		CIO 3110 to CIO 3119
Polled Unit No. 7	CIO 3101	CIO 3102 to CIO 3103	CIO 3103 to CIO 3105		CIO 3110 to CIO 3119
Not used.	CIO 3102 to CIO 3199	CIO 3104 to CIO 3199	CIO 3106 to CIO 3199		CIO 3120 to CIO 3199

Procedure

The Serial PLC Links operate according to the following settings in the PLC Setup in the Polling Unit and Polled Units.

Settings at the Polling Unit

1,2,3...

1. Set the serial communications mode of serial port 1 or 2 to Serial PLC Links (Polling Unit).
2. Set the link method to the Complete Link Method or Polling Unit Link Method.
3. Set the number of link words (up to 10 words for each Unit).
4. Set the maximum unit number in the Serial PLC Links (0 to 7).

Settings at the Polled Units

1,2,3...

1. Set the serial communications mode of serial port 1 or 2 to Serial PLC Links (Polled Unit).
2. Set the unit number of the Serial PLC Link Polled Unit.

PLC Setup

Settings at the Polling Unit

Item		Set value	Default	Refresh timing
Serial port 1 or 2	Mode: Communications mode	PC Link (Master): PLC Link Polling Unit	Host Link	Every cycle
	Baud: Baud rate	38,400 bps, 115,200 bps	9,600 bps	
	PC link mode: PLC Link method	ALL: Complete link method Masters: Polling Unit method	ALL	
	Link words: No. of link words	1 to 10 words	10 words	
	PC Link Unit No.: Max. unit No.	0 to 7	0 hex	

Settings at the Polled Unit

Item		Set value	Default	Refresh timing
Serial port 1 or 2	Mode: Communications mode	PC Link (Slave): PLC Link Polled Unit	Host Link	Every cycle
	Baud: Baud rate	38,400 bps, 115,200 bps	9,600 bps	
	Unit number	0 to 7	0	

Note Both serial ports cannot be used for PLC Links at the same time. If both ports are set for PLC Links (either as polling node or polled node), a PLC Setup setting error (non-fatal error) will occur and the PLC Setup Setting Error Flag (A402.10) will turn ON. If PLC Links is set for one serial port, set the other serial port to a different mode.

Related Auxiliary Area Flags for Serial Port 1 of an M-type CPU Unit

Name	Address	Details	Read/write	Refresh timing
Serial Port 1 Communications Error Flag	A392.12	Turns ON when a communications error occurs at serial port 1. ON: Error OFF: Normal	Read	• Cleared when power is turned ON. • Turns ON when a communications error occurs at serial port 1. • Turns OFF when the port is restarted. • Disabled in peripheral bus mode and NT link mode.
Serial Port 1 Communicating with PT Flags (See note.)	A394.00 to A394.07	When serial port 1 is being used in NT link mode, the bit corresponding to the Unit performing communications will be ON. Bits 00 to 07 correspond to unit numbers 0 to 7, respectively. ON: Communicating OFF: Not communicating	Read	• Cleared when power is turned ON. • Turns ON the bit corresponding to the unit number of the PT/Polled Unit that is communicating via serial port 1 in NT link mode or Serial PLC Link mode. • Bits 00 to 07 correspond to unit numbers 0 to 7, respectively.
Serial Port 1 Restart Bit	A526.01	Turn ON this bit to restart serial port 1.	Read/write	• Cleared when power is turned ON. • Turn ON to restart serial port 1, (except when communicating in peripheral bus mode). Note: The bit is automatically turned OFF by the system when restart processing has been completed.
Serial Port 1 Error Flags	A528.08 to A528.15	When an error occurs at serial port 1, the corresponding error bit is turned ON. Bit 08: Not used. Bit 09: Not used. Bit 10: Parity error Bit 11: Framing error Bit 12: Overrun error Bit 13: Timeout error Bit 14: Not used. Bit 15: Not used.	Read/write	• Cleared when power is turned ON. • When an error occurs at serial port 1, the corresponding error bit is turned ON. • The flag is automatically turned OFF by the system when serial port 1 is restarted. • Disabled during peripheral bus mode. • In NT link mode, only bit 05 (timeout error) is enabled. In Serial PLC Link mode, only the following bits are enabled. • Errors at the Polling Unit: Bit 05: Timeout error • Errors at Polled Units: Bit 05: Timeout error Bit 04: Overrun error Bit 03: Framing error
Serial Port 1 Settings Changed Flag	A619.01	Turns ON when the communications conditions of serial port 1 are being changed. ON: Changed OFF: No change	Read/write	• Cleared when power is turned ON. • Turns ON while communications conditions settings for serial port 1 are being changed. • Turns ON when the CHANGE SERIAL PORT SETUP instruction (STUP(237)) is executed. • Turns OFF when the changes to settings are completed.

Note In the same way as for the existing 1:N NT Link, the status (communicating/not communicating) of PTs in Serial PLC Links can be checked from the Polling Unit (CPU Unit) by reading the Serial Port 1 Communicating with PT Flag (A394 bits 00 to 07 for unit numbers 0 to 7).

Related Auxiliary Area Flags for Serial Port 2 of an M-type CPU Unit

Name	Address	Details	Read/write	Refresh timing
Serial Port 2 Communications Error Flag	A392.04	Turns ON when a communications error occurs at Serial Port 2. ON: Error OFF: Normal	Read	• Cleared when power is turned ON. • Turns ON when a communications error occurs at Serial Port 2. • Turns OFF when the port is restarted. • Disabled in peripheral bus mode and NT link mode.
Serial Port 2 Communicating with PT Flags (See note.)	A393.00 to A393.07	When Serial Port 2 is being used in NT link mode, the bit corresponding to the Unit performing communications will be ON. Bits 00 to 07 correspond to unit numbers 0 to 7, respectively. ON: Communicating OFF: Not communicating	Read	• Cleared when power is turned ON. • Turns ON the bit corresponding to the unit number of the PT/Polled Unit that is communicating via Serial Port 2 in NT link mode or Serial PLC Link mode. • Bits 00 to 07 correspond to unit numbers 0 to 7, respectively.
Serial Port 2 Restart Bit	A526.00	Turn ON this bit to restart Serial Port 2.	Read/write	• Cleared when power is turned ON. • Turn ON to restart Serial Port 2, (except when communicating in peripheral bus mode). Note: The bit is automatically turned OFF by the system when restart processing has been completed.
Serial Port 2 Error Flags	A528.00 to A528.07	When an error occurs at Serial Port 2, the corresponding error bit is turned ON. Bit 00: Not used. Bit 01: Not used. Bit 02: Parity error Bit 03: Framing error Bit 04: Overrun error Bit 05: Timeout error Bit 06: Not used. Bit 07: Not used.	Read/write	• Cleared when power is turned ON. • When an error occurs at Serial Port 2, the corresponding error bit is turned ON. • The flag is automatically turned OFF by the system when Serial Port 2 is restarted. • Disabled during peripheral bus mode. • In NT link mode, only bit 05 (timeout error) is enabled. In Serial PLC Link mode, only the following bits are enabled. • Errors at the Polling Unit: Bit 05: Timeout error • Errors at Polled Units: Bit 05: Timeout error Bit 04: Overrun error Bit 03: Framing error
Serial Port 2 Settings Changed Flag	A619.02	Turns ON when the communications conditions of Serial Port 2 are being changed. ON: Changed OFF: No change	Read/write	• Cleared when power is turned ON. • Turns ON while communications conditions settings for Serial Port 2 are being changed. • Turns ON when the CHANGE SERIAL PORT SETUP instruction (STUP(237)) is executed. • Turns OFF when the changes to settings are completed.

Note In the same way as for the existing 1:N NT Link, the status (communicating/not communicating) of PTs in Serial PLC Links can be checked from the Polling Unit (CPU Unit) by reading the Serial Port 2 Communicating with PT Flag (A393 bits 00 to 07 for unit numbers 0 to 7).

Related Auxiliary Area Flags for Serial Port 1 of an L-type CPU Unit

Name	Address	Details	Read/write	Refresh timing
Serial Port 1 Communications Error Flag	A392.04	Turns ON when a communications error occurs at Serial Port 1. ON: Error OFF: Normal	Read	• Cleared when power is turned ON. • Turns ON when a communications error occurs at Serial Port 1. • Turns OFF when the port is restarted. • Disabled in peripheral bus mode and NT link mode.
Serial Port 1 Communicating with PT Flags (See note.)	A393.00 to A393.07	When Serial Port 1 is being used in NT link mode, the bit corresponding to the Unit performing communications will be ON. Bits 00 to 07 correspond to unit numbers 0 to 7, respectively. ON: Communicating OFF: Not communicating	Read	• Cleared when power is turned ON. • Turns ON the bit corresponding to the unit number of the PT/Polled Unit that is communicating via Serial Port 1 in NT link mode or Serial PLC Link mode. • Bits 00 to 07 correspond to unit numbers 0 to 7, respectively.
Serial Port 1 Restart Bit	A526.00	Turn ON this bit to restart Serial Port 1.	Read/write	• Cleared when power is turned ON. • Turn ON to restart Serial Port 1, (except when communicating in peripheral bus mode). Note: The bit is automatically turned OFF by the system when restart processing has been completed.
Serial Port 1 Error Flags	A528.00 to A528.07	When an error occurs at Serial Port 1, the corresponding error bit is turned ON. Bit 00: Not used. Bit 01: Not used. Bit 02: Parity error Bit 03: Framing error Bit 04: Overrun error Bit 05: Timeout error Bit 06: Not used. Bit 07: Not used.	Read/write	• Cleared when power is turned ON. • When an error occurs at Serial Port 1, the corresponding error bit is turned ON. • The flag is automatically turned OFF by the system when Serial Port 1 is restarted. • Disabled during peripheral bus mode. • In NT link mode, only bit 05 (timeout error) is enabled. In Serial PLC Link mode, only the following bits are enabled. • Errors at the Polling Unit: Bit 05: Timeout error • Errors at Polled Units: Bit 05: Timeout error Bit 04: Overrun error Bit 03: Framing error
Serial Port 1 Settings Changed Flag	A619.02	Turns ON when the communications conditions of Serial Port 1 are being changed. ON: Changed OFF: No change	Read/write	• Cleared when power is turned ON. • Turns ON while communications conditions settings for Serial Port 1 are being changed. • Turns ON when the CHANGE SERIAL PORT SETUP instruction (STUP(237)) is executed. • Turns OFF when the changes to settings are completed.

In the same way as for the existing 1:N NT Link, the status (communicating/not communicating) of PTs in Serial PLC Links can be checked from the Polling Unit (CPU Unit) by reading the Serial Port 1 Communicating with PT Flag (A393 bits 00 to 07 for unit numbers 0 to 7).

6-3-6 1:1 Links

Two PLCs can be connected through their RS-232C ports to create Link Areas.

Applicable PLCs

A 1:1 Link can be create between any of the following SYSMAC PLCs:

CP1L, CQM1H, C200HX/HG/HE(-Z), CPM1A-V1, CPM2A, CPM2B, CPM2C, and SRM1(-V2)

Connections

To create a 1:1 Link, connect the RS-232C ports on the two PLCs.

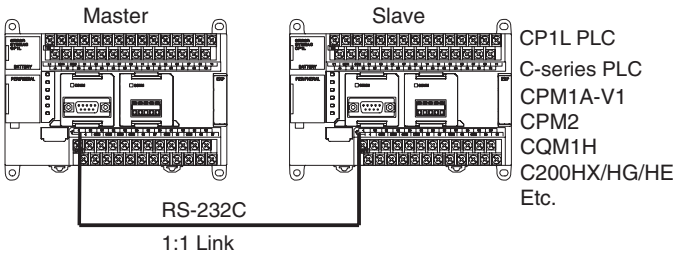

PLC Setup

Set the PLC to a 1:1 Link Master or a 1:1 Link Slave in the PLC Setup. Set the other PLC to the opposite setting.

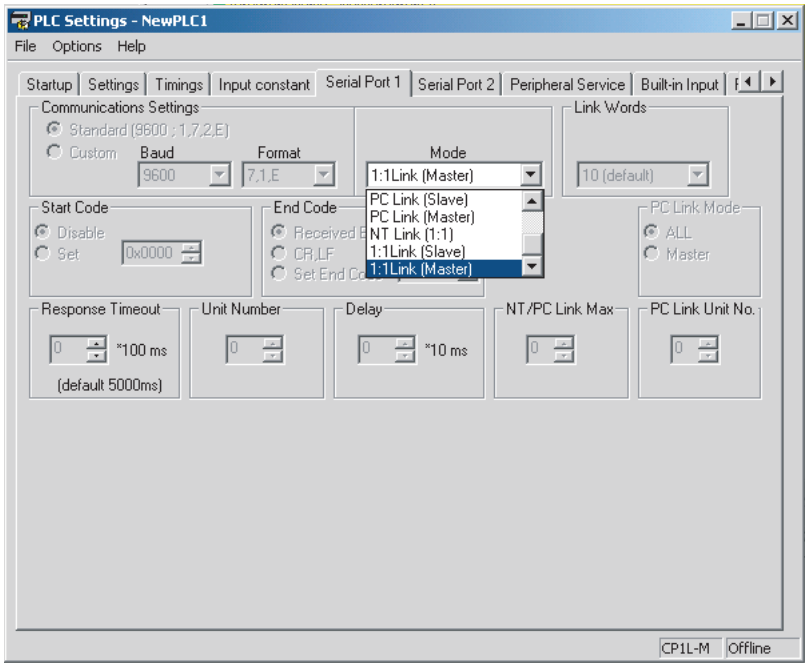

Link Area Size

The 1:1 Link Area in the CP1L is from CIO 3000 to CIO 3015 (16 words). Even if a 1:1 Link is created with a CQM1H or C200HX/HG/HE(-Z) PLC, the 1:1 Link Area will be only 16 words on both sides of the link, and only LR 00 to LR 15 will be used in the CQM1H or C200HX/HG/HE(-Z) PLC. LR 16 to LR 63 cannot be used for 1:1 Links

Operation

Here, operation is described assuming that the master is the CP1L and the slave is the CPM2A.

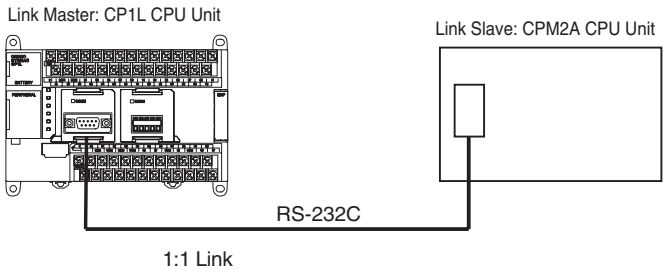

1:1 Link Area

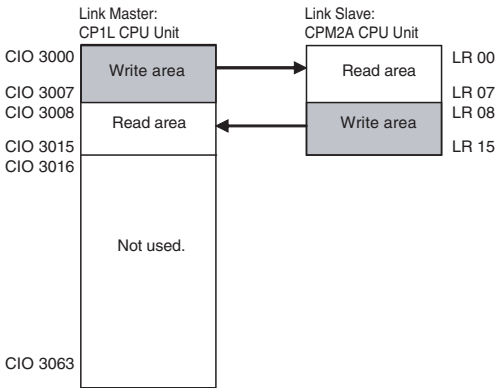

CP1L is set as the link master, so CIO 3000 to CIO 3007 are its write area. Any data written to these words with the OUT or MOV instructions will be automatically transferred to LR 00 to LR 07 in the CPM2A. The CPM2A will use these words as its read area.

CIO 3008 to 3015 are the read area of the CP1L. The contents of LR 08 to LR 15 in the CPM2A will automatically be transferred to CIO 3008 to 3015 in the CP1L. The words in the PLC's read area cannot be written using the OUT, MOV, or any other write instructions.

6-3-7 1:N NT Links

In the CP Series, communications are possible with PTs (Programmable Terminals) using NT Links in 1:N mode.

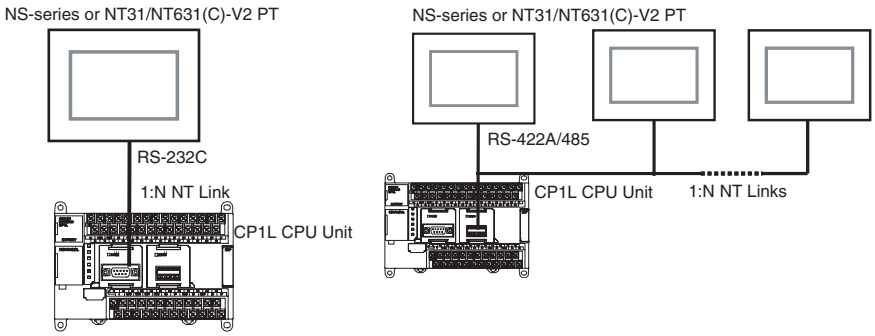

Note Communications are not possible using the 1:1-mode NT Link protocol.

High-speed NT Links are possible in addition to the previous standard NT Links by using the PT system menu and the following PLC Setup. High-speed NT Links are possible, however, only with NS-series PTs or with the NT31(C)-V2 or NT631(C)-V2 PTs.

PLC Setup

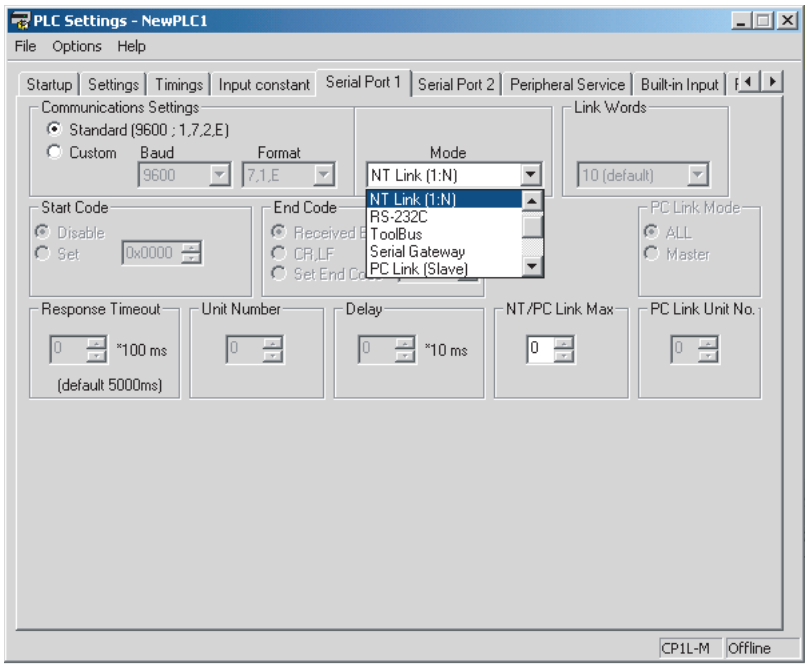

Port	Name	Settings contents	Default values	Other conditions
Serial port 1 or 2	Mode: Communications mode	NT Link (1:N): 1:N NT Links	Host Link	Turn OFF pin 4 on the CPU Unit DIP switch hen using serial port 1 and turn OFF pin 5 when using serial port 2.
	Baud: Baud rate	38,400 (standard) 115,200 (high speed)	9,600 (disabled)	
	NT/PC Link Max: Highest unit number	0 to 7	0	---

PT System Menu

Set the PT as follows:

1,2,3...

1. Select NT Link (1:N) from Comm. A Method or Comm. B Method on the Memory Switch Menu under the System Menu on the PT Unit.
2. Press the SET Touch Switch to set the Comm. Speed to High Speed.

6-3-8 1:1 NT Links

The NT Link communications protocol was developed to enable high-speed communications between PLC and Programmable Terminals (PTs). There are two communications modes supported by the NT Link protocol: 1:1 NT Links, in which one PLC is connected to one PT, and 1:N NT Links, in which one PLC is connected to more than one PT.

Connections

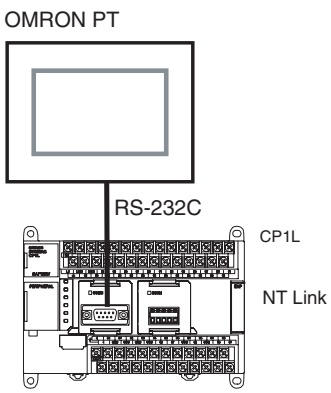

With the NT Link protocol, the PLC automatically responds to commands sent from the PT, so no communications programming is required in the CP1L.

PLC Setup

Select “NT Link (1:1) as the serial communications mode.

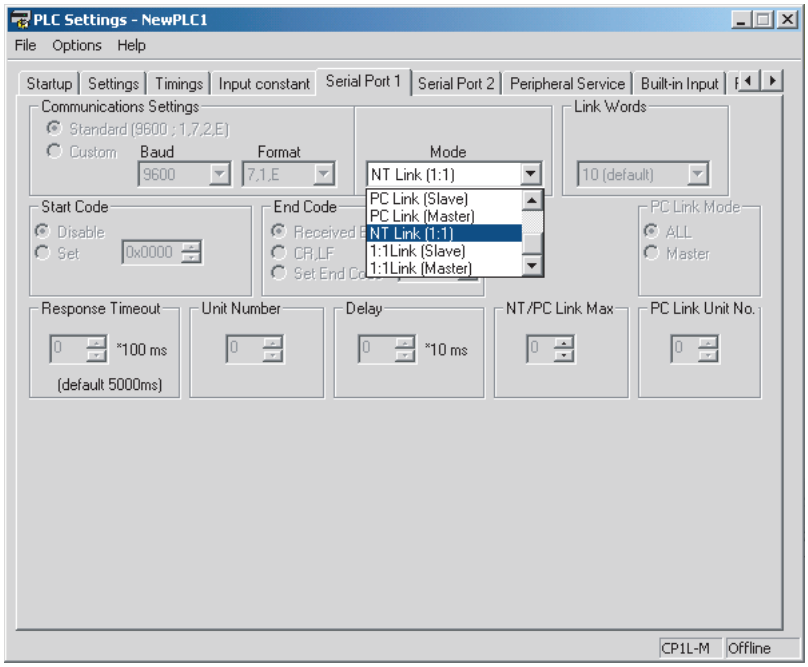

6-3-9 Host Link Communications

The following table shows the host link communication functions available in CP1L PLCs. Select the method that best suits your application.

Command flow	Command type	Communications method	Configuration
Host computer 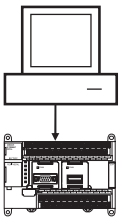	Host link command (C Mode) Host link command	Create frame in the host computer and send the command to the PLC. Receive the response from the PLC. Application: Use this method when communicating primarily from the host computer to the PLC.	Directly connect the host computer in a 1:1 or 1:N system. 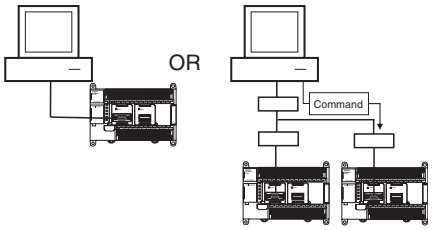

Command flow	Command type	Communications method	Configuration
	FINS command (with Host Link header and terminator) sent. 	Create frame in the host computer and send the command to the PLC. Receive the response from the PLC. Application: Use these methods when communicating primarily from the host computer to PLCs in the network. Remarks: The FINS command must be placed between a Host Link header and terminator and then sent by the host computer.	Directly connect the host computer in a 1:1 or 1:N system. 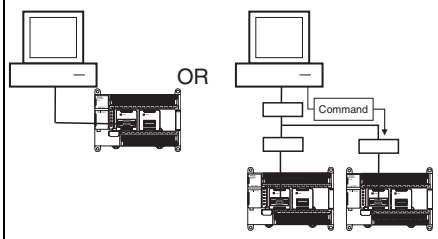
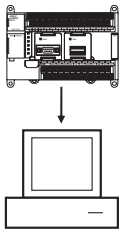	FINS command (with Host Link header and terminator) is sent. 	Send the command frame with the CPU Unit's SEND, RECV, or CMND instruction. Receive response from the host computer. Application: Use this method when communicating primarily from the PLC to the host computer to transmit status information, such as error information. Remarks: The FINS command will be placed between a Host Link header and terminator when it is sent. The FINS command must be interpreted at the host computer and then the host computer must return a response.	Directly connect the host computer in a 1:1 system. 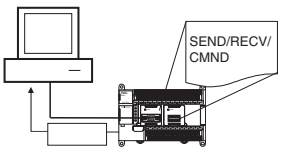

Procedure

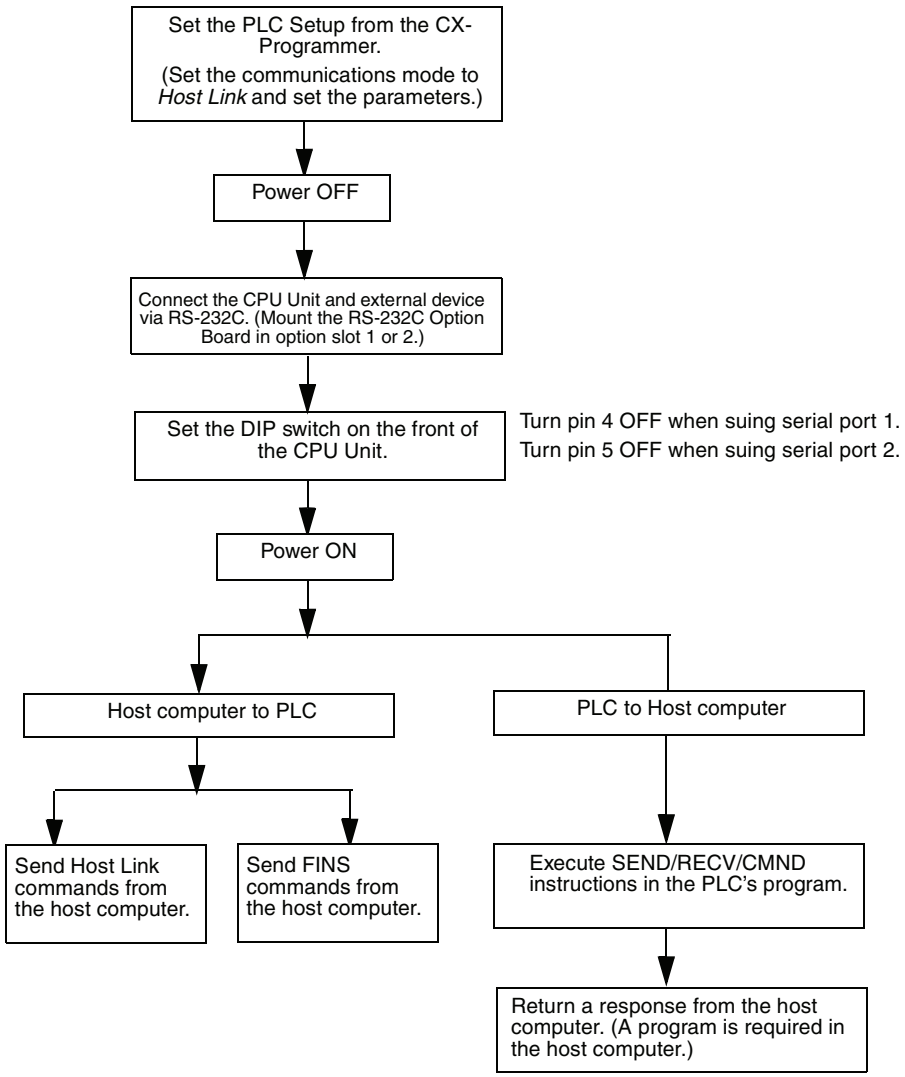

Host Link Commands

The following table lists the host link commands. Refer to the *SYSMAC CS/CJ-series Communications Commands Reference Manual* (W342) for more details.

Type	Header code	Name	Function
I/O memory read commands	RR	CIO AREA READ	Reads the contents of the specified number of CIO Area words starting from the specified word.
	RL	LINK AREA READ	Reads the contents of the specified number of Link Area words starting from the specified word.
	RH	HR AREA READ	Reads the contents of the specified number of Holding Area words starting from the specified word.
	RC	PV READ	Reads the contents of the specified number of timer/counter PVs (present values) starting from the specified timer/counter.
	RG	T/C STATUS READ	Reads the status of the Completion Flags of the specified number of timers/counters starting from the specified timer/counter.
	RD	DM AREA READ	Reads the contents of the specified number of DM Area words starting from the specified word.
	RJ	AR AREA READ	Reads the contents of the specified number of Auxiliary Area words starting from the specified word.

Type	Header code	Name	Function
I/O memory write commands	WR	CIO AREA WRITE	Writes the specified data (word units only) to the CIO Area, starting from the specified word.
	WL	LINK AREA WRITE	Writes the specified data (word units only) to the Link Area, starting from the specified word.
	WH	HR AREA WRITE	Writes the specified data (word units only) to the Holding Area, starting from the specified word.
	WC	PV WRITE	Writes the PVs (present values) of the specified number of timers/counters, starting from the specified timer/counter.
	WD	DM AREA WRITE	Writes the specified data (word units only) to the DM Area, starting from the specified word.
	WJ	AR AREA WRITE	Writes the specified data (word units only) to the Auxiliary Area, starting from the specified word.
Timer/ counter SV read commands	R#	SV READ 1	Reads the 4-digit BCD constant or word address in the SV of the specified timer/counter instruction.
	R$	SV READ 2	Searches for the specified timer/counter instruction beginning at the specified program address and reads the 4-digit constant or word address in the SV.
	R%	SV READ 3	Searches for the specified timer/counter instruction beginning at the specified program address and reads the 4-digit BCD constant or word address in the SV.
Timer/ counter SV write commands	W#	SV CHANGE 1	Changes the 4-digit BCD constant or word address in the SV of the specified timer/counter instruction.
	W$	SV CHANGE 2	Searches for the specified timer/counter instruction beginning at the specified program address and changes the 4-digit constant or word address in the SV.
	W%	SV CHANGE 3	Searches for the specified timer/counter instruction beginning at the specified program address and changes the 4-digit constant or word address in the SV.
CPU Unit status commands	MS	STATUS READ	Reads the operating status of the CPU Unit (operating mode, force-set/reset status, fatal error status).
	SC	STATUS CHANGE	Changes the CPU Unit's operating mode.
	MF	ERROR READ	Reads and clears errors in the CPU Unit (non-fatal and fatal).
Force-set/force-reset commands	KS	FORCE SET	Force-sets the specified bit.
	KR	FORCE RESET	Force-resets the specified bit.
	FK	MULTIPLE FORCE SET/RESET	Force-sets, force-resets, or clears the forced status of the specified bits.
	KC	FORCE SET/RESET CANCEL	Cancels the forced status of all force-set and force-reset bits.
Model read command	MM	PLC MODEL READ	Reads the model type of the PLC.
Test command	TS	TEST	Returns, unaltered, one block of data transmitted from the host computer.
Program area access commands	RP	PROGRAM READ	Reads the contents of the CPU Unit's user program area in machine language (object code).
	WP	PROGRAM WRITE	Writes the machine language (object code) program transmitted from the host computer into the CPU Unit's user program area.
I/O memory compound read commands	QQMR	COMPOUND COMMAND	Registers the desired bits and words in a table.
	QQIR	COMPOUND READ	Reads the registered words and bits from I/O memory.

Type	Header code	Name	Function
Host Link communications processing commands	XZ	ABORT (command only)	Aborts the host link command that is currently being processed.
	**	INITIALIZE (command only)	Initializes the transmission control procedure of all PLCs connected to the host computer.
	IC	Undefined command (response only)	This response is returned if the header code of a command was not recognized.

FINS Commands

The following table lists the FINS commands. Refer to the *FINS Commands Reference Manual (W227)* for more details.

Type	Command code		Name	Function
I/O Memory Area Access Commands	01	01	MEMORY AREA READ	Reads consecutive data from the I/O memory area.
	01	02	MEMORY AREA WRITE	Writes consecutive data to the I/O memory area.
	01	03	MEMORY AREA FILL	Fills the specified range of I/O memory with the same data.
	01	04	MULTIPLE MEMORY AREA READ	Reads non-consecutive data from the I/O memory area.
	01	05	MEMORY AREA TRANSFER	Copies and transfers consecutive data from one part of the I/O memory area to another.
Parameter Area Access Commands	02	01	PARAMETER AREA READ	Reads consecutive data from the parameter area.
	02	02	PARAMETER AREA WRITE	Writes consecutive data to the parameter area.
	02	03	PARAMETER AREA FILL	Fills the specified range of the parameter area with the same data.
Program Area Access Commands	03	06	PROGRAM AREA READ	Reads data from the user program area.
	03	07	PROGRAM AREA WRITE	Writes data to the user program area.
	03	08	PROGRAM AREA CLEAR	Clears the specified range of the user program area.
Execution Control Commands	04	01	RUN	Switches the CPU Unit to RUN or MONITOR mode.
	04	02	STOP	Switches the CPU Unit to PROGRAM mode.
Configuration Read Commands	05	01	CONTROLLER DATA READ	Reads CPU Unit information.
	05	02	CONNECTION DATA READ	Reads the model numbers of the specified Units.
Status Read Commands	06	01	CONTROLLER STATUS READ	Reads the CPU Unit's status information.
	06	20	CYCLE TIME READ	Reads the average, maximum, and minimum cycle times.
Clock Access Commands	07	01	CLOCK READ	Reads the clock.
	07	02	CLOCK WRITE	Sets the clock.
Message Access Commands	09	20	MESSAGE READ/CLEAR	Reads/clears messages and FAL (FALS) messages.
Access Right Commands	0C	01	ACCESS RIGHT ACQUIRE	Acquires the access right if no other device holds it.
	0C	02	ACCESS RIGHT FORCED ACQUIRE	Acquires the access right even if another device currently holds it.
	0C	03	ACCESS RIGHT RELEASE	Releases the access right regardless of what device holds it.
Error Access Commands	21	01	ERROR CLEAR	Clears errors and error messages.
	21	02	ERROR LOG READ	Reads the error log.
	21	03	ERROR LOG CLEAR	Clears the error log pointer to zero.
Forced Status Commands	23	01	FORCED SET/RESET	Force-sets, force-resets, or clears the forced status of the specified bits.
	23	02	FORCED SET/RESET CANCEL	Cancels the forced status of all force-set and force-reset bits.

6-4 Analog Adjuster and External Analog Setting Input

6-4-1 Analog Adjuster

By turning the analog adjuster on the CP1L CPU Unit with a Phillips screwdriver, the PV in the Auxiliary Area (A642) can be changed to any value within a range of 0 to 255.

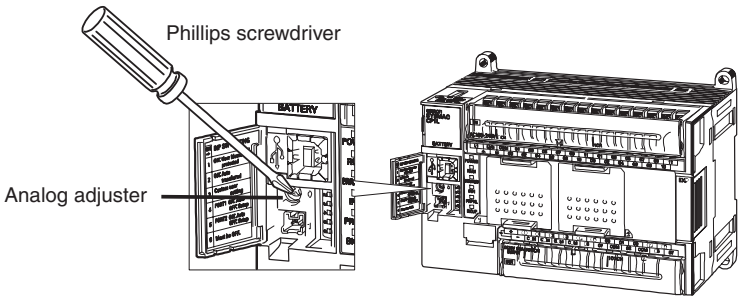

Application Example

Setting the value for timer T100 in A642 makes it possible to use T100 as a variable timer with a range of 0 to 25.5 s (0 to 255). A change in the set value is reflected with the next scan.

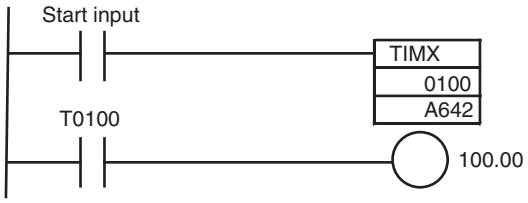

Note Set values from the analog adjuster may vary with changes in the ambient temperature and the power supply voltage. Do not use it for applications that require highly precise set values.

6-4-2 External Analog Setting Input

When a voltage of 0 to 10 V is applied to the CP1L CPU Unit's external analog setting input terminal, the voltage is converted from analog to digital and the PV in A643 can be changed to any value within a range of 0 to 256 (0000 to 0100 hex).

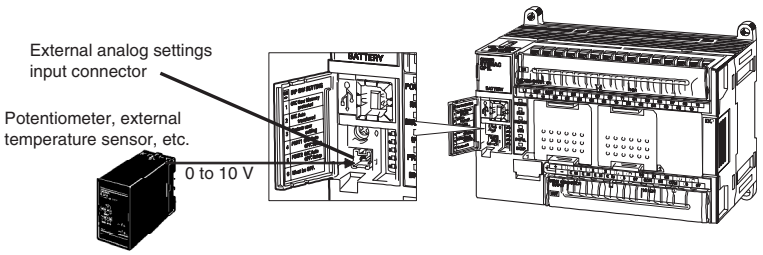

External Analog Setting Input Wiring

Use the 1-m lead wire (included) for wiring to the external analog setting input connector on the CP1L CPU Unit.

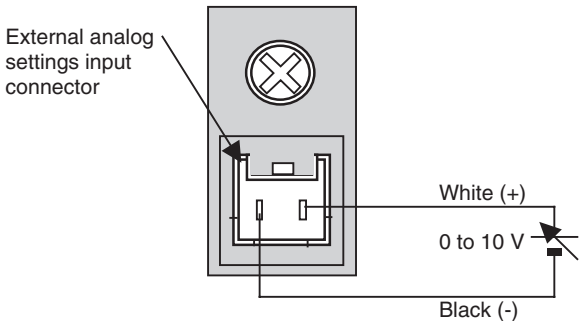

Relationship between Input Voltage and PV in A643

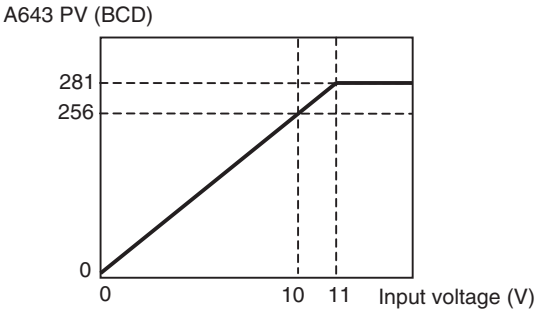

The maximum input voltage is 11 VDC. Do not apply a voltage greater than that.

Application Example

Setting the value for timer T101 in A643 makes it possible to use T101 as a variable timer with a range of 0 to 25.6 s (0 to 256). A change in the set value is reflected with the next scan.

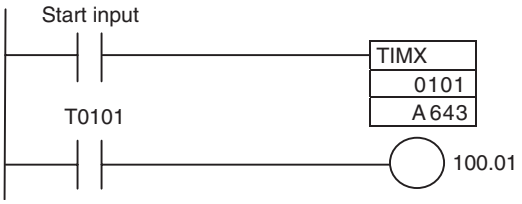

Note External analog setting input values may vary with changes in the ambient temperature. Do not use the external analog setting input for applications that require highly precise set values.

6-5 Battery-free Operation

6-5-1 Overview

With the CP1L CPU Unit, saving backup data in the built-in flash memory (non-volatile memory) enables operation with no battery mounted (i.e., battery-free operation).

I/O memory (such as CIO), however, is constantly refreshed during operation, so backup data is not saved in the built-in flash memory. When battery-free operation is used, therefore, programs must be created assuming that I/O memory data will not be saved.

For example, if a battery is mounted, then HR, CNT, and DM data is saved during power interruptions if a battery is mounted but not when battery-free operation is used.

In that case it is necessary to set the required values in the ladder program. It is also possible to save to the built-in flash memory in advance the DM initial values that are to be set for the DM on RAM at startup.

6-5-2 Using Battery-free Operation

Precautions when Creating Programs for Battery-free Operation

Be careful of the following points, and create programs for which it will not be a problem even if the correct I/O memory values are not held.

- For unstable parts of I/O memory, include programming at the start of operation to set required data.
- When battery-free operation is used, the Output OFF Flag (A500.15) in the Auxiliary Area becomes unstable. When the Output OFF Flag turns ON, all outputs turn OFF, so include the following program for clearing the Output OFF Flag at the start of operation.

- Do not reference the clock function, (the clock data in words A351 to A354 of the Auxiliary Area, or the various kinds of time data).

Saving DM Initial Values (Only when Required)

Use the following procedure to save to the built-in flash memory the DM initial values that are to be set at startup.

1,2,3...

1. First set in the DM Area the data that is to be set as initial values at startup.
2. Execute a backup to flash memory from the CX-Programmer's Memory Cassette Transfer/Data Memory Backup Dialog Box.
   The procedure is as follows:
   a. Select ***PLC*** - ***Edit*** - ***Memory Cassette/DM***.
      The following Memory Cassette Transfer/DM Backup Dialog Box will be displayed.

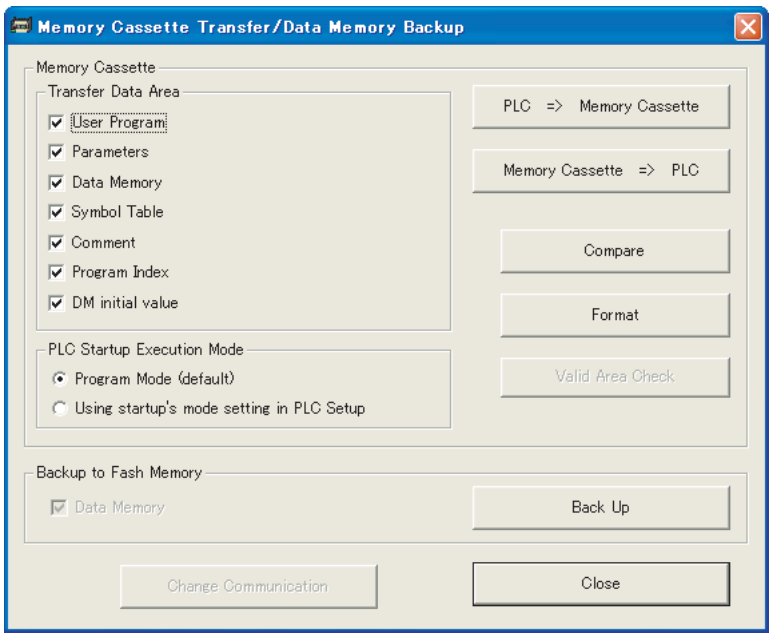

b. Select the *Data Memory* Option in the *Backup to Flash Memory* Area and click the **Backup** Button.
The DM data will be written to the built-in flash memory.

Note The DM data that is saved and written at startup is the entire DM Area (D0 to D32767).

PLC Setup

1,2,3...

1. Set *Do not detect Low Battery (run without battery)* to *Do not detect*.
2. Set *IOM Hold Bit Status at Startup* and *Forced Status Hold Bit Status at Startup* to *Clear (OFF)*.
3. Set *Read DM from flash memory* to *Read*. (Only when DM initial values have been saved as described above.)

⚠ **Caution** The CP1L CPU Units automatically back up the user program and parameter data to flash memory when these are written to the CPU Unit. Also, the CX-Programmer can be used to save all of the data in the DM Area to the flash memory for use as initial values when the power supply is turned ON. Neither of these functions saves the I/O memory data (including HR Area data, counter PVs and Completion Flags, and DM Area data other than initial values). The HR Area data, counter PVs and Completion Flags, and DM Area data other than initial values are held during power interruptions with a battery. If there is a battery error, the contents of these areas may not be accurate after a power interruption. If HR Area data, counter PVs and Completion Flags, and DM Area data other than initial values are used to control external outputs, prevent inappropriate outputs from being made whenever the Battery Error Flag (A402.04) is ON.

6-6 Memory Cassette Functions

6-6-1 Overview

CP1L CPU Units have Memory Cassette functions that enable data in the CPU Unit to be stored on and read from a special CP1W-ME05M Memory Cassette. These functions can be used for the following applications.

- Copying data to other CPU Units to produce duplicate devices.
- Backing up data in case the CPU Unit needs to be replaced due to any malfunction.
- Writing and updating data when existing device versions are upgraded.

Memory Cassette Specifications

Use the following Memory Cassette.

Model	Specifications	
CP1W-ME05M	• Memory size	512 Kwords
	• Storage capacity	The following CPU Unit data (for each Unit) • User programs • Parameters • Comment memory • Function Block (FB) sources • DM initial values in the built-in flash memory • DM in RAM
	• Write method	Operations from the CX-Programmer
	• Read method	Powering up with DIP switch pin SW2 set to ON, or operations from the CX-Programmer

Data that Can be Stored on a Memory Cassette

The following data can be stored on a Memory Cassette.

Data stored on Memory Cassette		Location in CPU Unit
User programs		Built-in RAM, built-in flash memory (User Program Area)
Parameters	PLC Setup, CPU Bus Unit settings, routing tables	Built-in RAM, built-in flash memory (Parameter Area)
Comment data for user programs	Variable tables	Built-in flash memory (Comment Memory Area)
	(I/O comments, rung comments, program comments)	Built-in flash memory (Comment Memory Area)
	Program indexes (section names, section comments, program comments)	Built-in flash memory (Comment Memory Area)
Function Block (FB) sources		Built-in flash memory (FB Source Memory Area)
DM		Built-in RAM (D0 to D32767 in DM Area)
DM initial values (See note.)		Built-in flash memory (DM Initial Values Area)

The areas for storing various types of data have fixed allocations in the Memory Cassette, and a single Memory Cassette corresponds to a single CPU Unit.

Therefore it is not possible to simultaneously store multiple items of the same type of data (e.g., two user programs).

Also, the data can only be read to a CPU Unit. It cannot be directly managed from a personal computer like files.

The only data that can be stored on a Memory Cassette is the data from a CPU Unit.

Note The CX-Programmer's function for saving DM initial values is used for saving the values in the DM Area (D0 to D32767) to the built-in flash memory as initial values. By means of a setting in the PLC Setup, these initial values can then be automatically written to the DM Area (D0 to D32767) when the power is turned ON.

6-6-2 Mounting and Removing a Memory Cassette

Mounting

1,2,3... 1. Turn OFF the power supply to the PLC and removed the cover to the Memory Cassette socket.

CPU Units with 10, 14 or 20 I/O Points

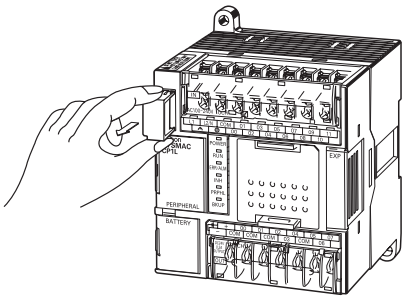

CPU Units with 30, 40 or 60 I/O Points

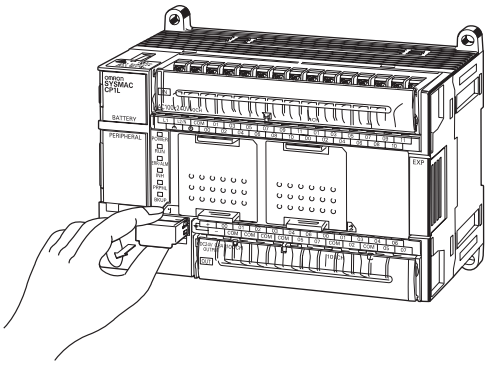

2. Holding the Memory Cassette with the side with the nameplate facing upwards, insert the Memory Cassette all the way into the slot.

CPU Units with 10, 14 or 20 I/O Points

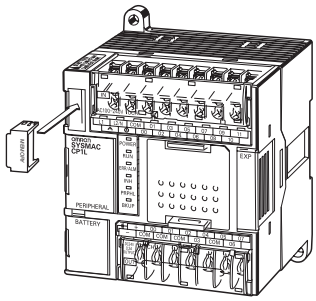

CPU Units with 30, 40 or 60 I/O Points

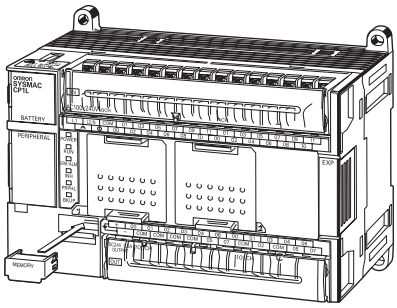

Removal

1,2,3...

1. Turn OFF the power supply to the PLC.
2. Grasp the end of the Memory Cassette between the thumbnail and index finger, and slide it upwards to remove it.

CPU Units with 10, 14 or 20 I/O Points

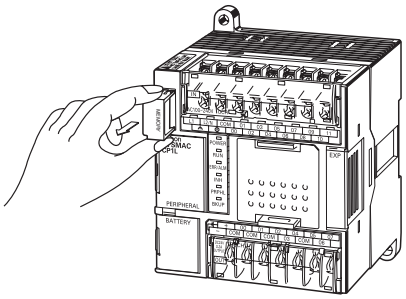

CPU Units with 30, 40 or 60 I/O Points

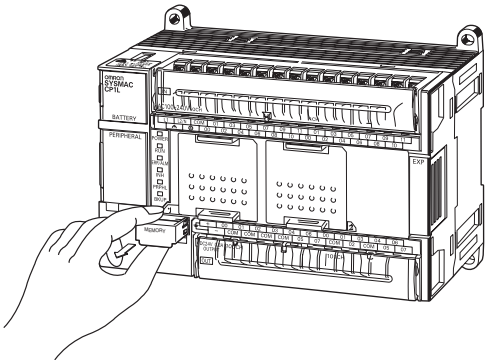

Note

(1) Turn OFF the power supply before mounting or removing the Memory Cassette.

(2) Absolutely do not remove the Memory Cassette while the BKUP indicator is flashing (i.e., during a data transfer or verification). Doing so could make the Memory Cassette unusable.

(3) The Memory Cassette is small, so be careful to not let it be dropped or lost when it is removed.

6-6-3 Operation Using the CX-Programmer

Use the following procedure for the Memory Cassette function.

1,2,3... 1. Select ***PLC*** - ***Edit*** - ***Memory Cassette/DM***.

The following Memory Cassette Transfer/Data Memory Backup Dialog Box will be displayed.

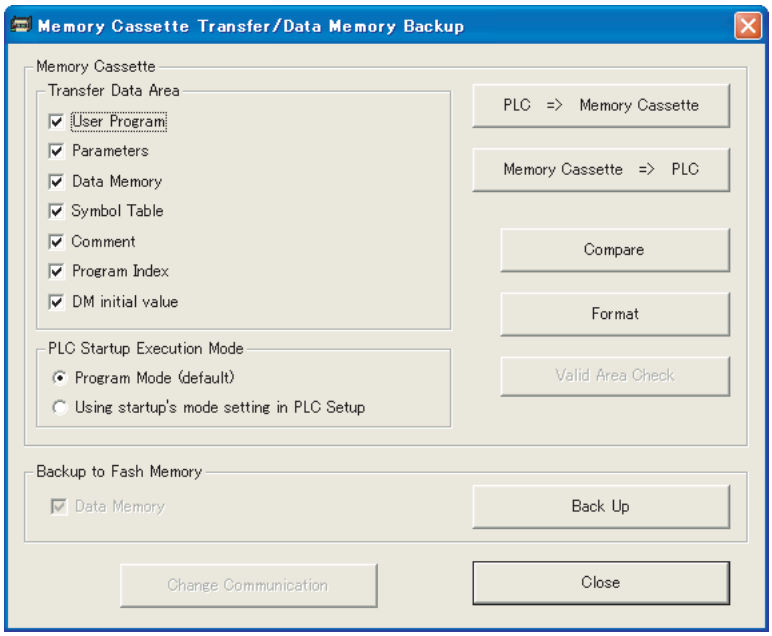

2. Under *Transfer Data Area*, check whatever types of data are to be transferred.

   Click the **Valid Area Check** Button to check the valid areas in the Memory Cassette mounted in the CPU Unit and the operating mode after automatic transfer at startup. If the user program is specified to be written, select the operating mode after automatic transfer at startup.

   - PROGRAM mode (default): Used, e.g., to copy the system.
   - Use PLC Setup: Used, e.g., for operation with the Memory Cassette.

3. Execute any of the following operations.

   - To write data from the CPU Unit to the Memory Cassette:
     Click the **PLC** ⇒ **Memory Cassette** Button.
   - To read data from the Memory Cassette to the CPU Unit:
     Click the **Memory Cassette** ⇒ **PLC** Button.
   - To verify data transferred between the CPU Unit and the Memory Cassette:
     Click the **Compare** Button. This will cause all areas to be verified regardless of the items checked under Transfer Area.
   - To format the Memory Cassette:
     Click the **Format** Button. This will cause all areas to be formatted regardless of the items checked under Transfer Area.

6-6-4 Memory Cassette Data Transfer Function

Writing from the CPU Unit to the Memory Cassette

The CX-Programmer's Memory Cassette function can be used to write data from the CPU Unit to the Memory Cassette. The data to be written can be individually specified.

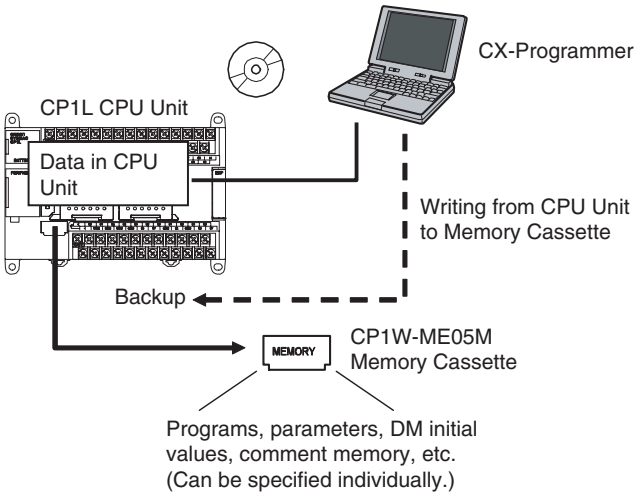

- When creating a Memory Cassette for a device version upgrade, select and save only the required data (such as the user program and DM).
- When creating a Memory Cassette for backup or duplication, save all of the data to the Memory Cassette.

CPU Unit and Memory Cassette Verification

When using the CX-Programmer's Memory Cassette function to store data in the Memory Cassette, verify that data by comparing it to the data in the CPU Unit. The data to be verified can be specified individually

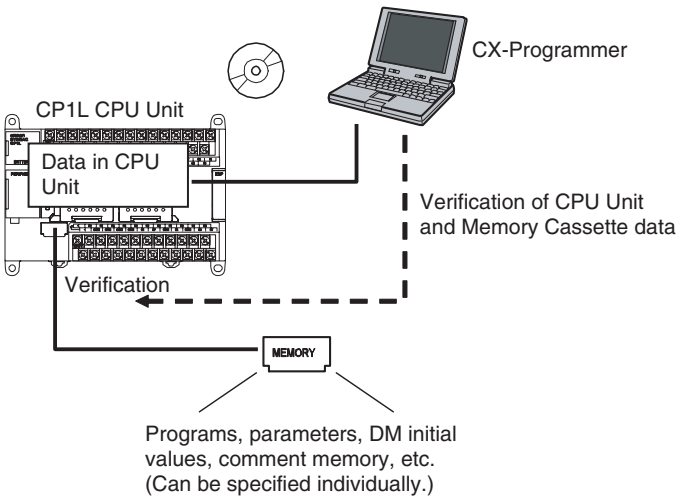

This function can be used for operations such as confirmation after data has been written to the Memory Cassette, or confirming that the data in the backup matches the data in the CPU Unit.

Automatic Transfer from the Memory Cassette at Startup

With just a simple DIP switch setting, data stored in advance in the Memory Cassette can be automatically read when the power is turned ON, and written to the corresponding areas in the CPU Unit.

Mount a Memory Card and set DIP switch pin SW2 to ON, and then turn the power OFF and back ON.

All valid data in the Memory Card will be automatically transferred to the CPU Unit.

Note When this function is executed, at least the user program must be stored on the Memory Cassette.

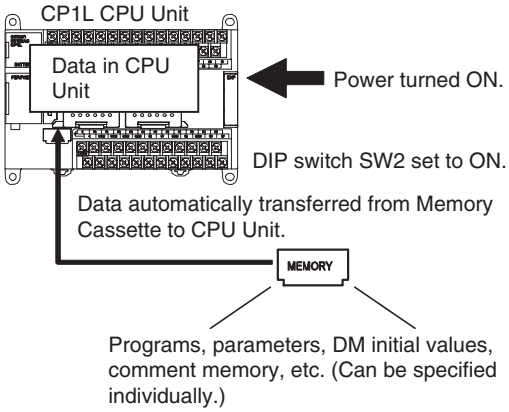

This function can be used to copy data to another CPU Unit without using the CX-Programmer.

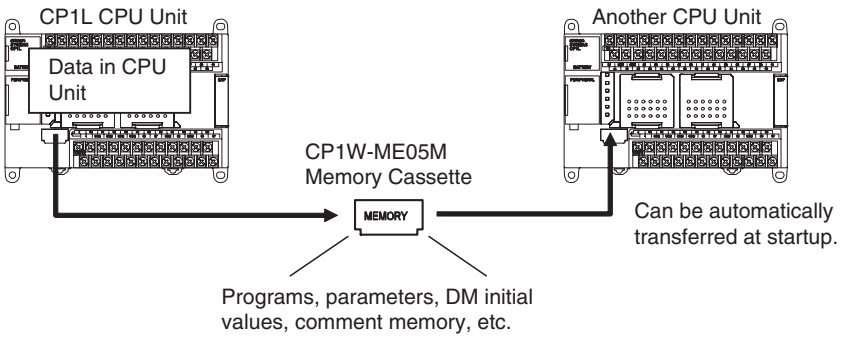

User programs can be overwritten to upgrade equipment versions without using the CX-Programmer.

If writing data from the CPU Unit to the Memory Cassette and the CPU Unit is set to use the operating mode specified in the PLC Setup as the operating mode after automatic transfer at startup, operation can be started without cycling the power, enabling operation from the Memory Cassette.

Reading Data from the Memory Cassette to the CPU Unit

The CX-Programmer's Memory Cassette function can be used to read data stored on the Memory Cassette, and transfer it to the corresponding areas in the CPU Unit. The data to be read can be individually specified.

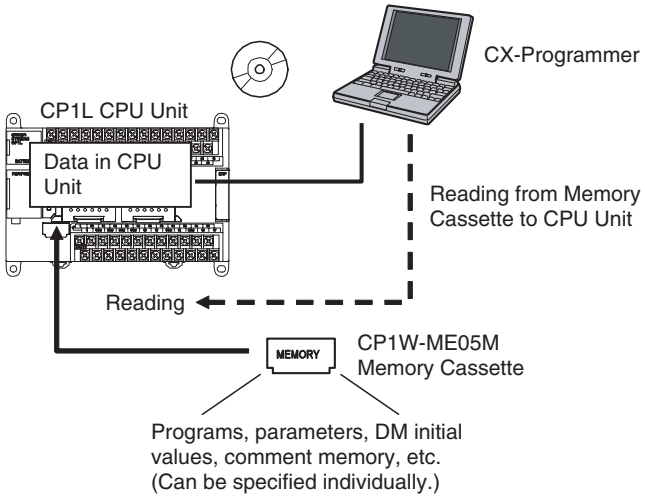

This function can be used for operations such as writing the required backup data to the CPU Unit for maintenance.

Precautions when Using the Memory Cassette Data Transfer Function

- In order for Memory Cassette data to be transferred, the Memory Cassette must be mounted in the CPU Unit.
- The BKUP indicator will light while data is being transferred to or verified in a Memory Cassette. Never turn OFF the power to the PLC or remove the Memory Cassette while the BKUP indicator is lit. Doing either may make it impossible to use the Memory Cassette.
- Memory Cassette data transfers and verification are possible only when the CPU Unit operating mode is PROGRAM mode. The Memory Cassette transfer function cannot be used in either RUN or MONITOR mode.
- When using automatic transfer from a Memory Cassette at startup, be sure to transfer the data to the Memory Cassette if any changes are made using online editing.
- The operating mode cannot be switched from PROGRAM mode to RUN or MONITOR mode while a Memory Cassette data transfer or verification is in progress.
- The following table shows whether data transfers are enabled when the CPU Unit is protected in various ways.

Type of protection	Transfer from CPU Unit to Memory Cassette	Transfer from Memory Cassette to CPU Unit
Not protected.	Yes	Yes
System protected by DIP switch pin SW1 set to ON.	Yes	No
Protected by password. Overwriting and duplication both permitted.	Yes	Yes
Protected by password. Overwriting prohibited and duplication permitted.	Yes	Transfer enabled only at startup.

Type of protection	Transfer from CPU Unit to Memory Cassette	Transfer from Memory Cassette to CPU Unit
Protected by password. Overwriting permitted and duplication prohibited.	No	Yes
Protected by password. Overwriting and duplication both prohibited.	No	Transfer enabled only at startup.

- If a Memory Cassette is not mounted, data will be read from the flash memory built into the CPU Unit to start operation regardless of the setting of DIP switch pin SW2.
- CP1L CPU Units with 10, 14 or 20 I/O points. do not have D10000 to D31999. These words will be treated as follows when data from a CPU Unit with 10, 14 or 20 I/O points is transferred to a CPU Unit with 30, 40 or 60 I/O points or visa versa.

Transferring data from a CPU Unit with 10, 14 or 20 I/O points to one with 30, 40 or 60 I/O points	"0000" will be written to D10000 to D31999 in the CPU Unit with 30, 40 or 60 I/O points.
Transferring data from a CPU Unit with 30, 40 or 60 I/O points to one with 10, 14 or 20 I/O points	D10000 to D31999 in the CPU Unit with 30, 40 or 60 I/O points will be ignored.

6-6-5 Procedures for Automatic Transfer from the Memory Cassette at Startup

Copying the System

Use the following procedure to enable automatic transfer at startup.

1,2,3...

1. Prepare a Memory Cassette containing the required data.
   When transferring the data to the Memory Cassette, set the operating mode after automatic transfer at startup to PROGRAM mode (default).
2. With the power supply turned OFF to the CPU Unit, remove the cover from the Memory Cassette slot and insert the Memory Cassette.
3. Open the cover for the CPU Unit's PERIPHERAL section and set DIP switch pin SW2 to ON.

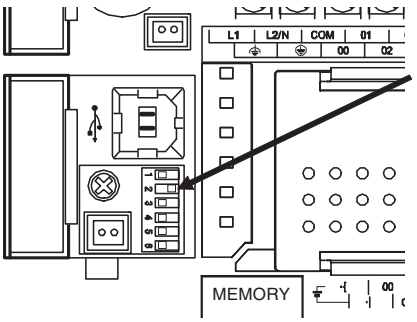

DIP switch pin SW2 set to ON.

4. Turn ON the power supply to the CPU Unit.
5. The automatic transfer from the Memory Cassette will begin. The rest of the procedure assumes that the operating mode after automatic transfer at startup to PROGRAM mode (default).
6. After the automatic transfer has been completed, turn OFF the power supply to the CPU Unit.
7. Remove the Memory Cassette, and replace the Memory Cassette slot cover.
8. Return the setting of DIP switch pin SW2 to OFF, and close the cover.

9. Turn the power supply to the CPU Unit back ON.

Note After the automatic transfer from the Memory Cassette at startup has been completed with the operating mode after automatic transfer at startup set to PROGRAM mode (default), the transfer will not start again automatically (regardless of the Startup Mode setting in the PLC Setup). As described in the procedure above, to start operation turn the power supply OFF, return the setting of DIP switch SW2 to OFF, and then turn the power supply back ON. If the the operating mode specified in the PLC Setup is set as the operating mode after automatic transfer at startup, operation will start without changing the DIP switch SW2 or Memory Cassette.

Operating from a Memory Cassette

1,2,3... 1. Prepare a Memory Cassette containing the required data.
When transferring the data to the Memory Cassette, set the operating mode after automatic transfer at startup to PROGRAM mode (default).
2. With the power supply turned OFF to the CPU Unit, remove the cover from the Memory Cassette slot and insert the Memory Cassette.
3. Open the cover for the CPU Unit's PERIPHERAL section and set DIP switch pin SW2 to ON.
4. Turn ON the power supply to the CPU Unit.

Note If, when the data is transferred to the Memory Cassette, the operating mode specified in the PLC Setup is set as the operating mode after automatic transfer at startup, operation will start automatically after data transfer, even if the power is not cycled. Be sure that starting operation will cause no problems before using automatic transfer at startup.

6-7 Program Protection

The following protection functions are supported by the CP1L CPU Units.

- Read protection from the CX-Programmer
- Write protection using a DIP switch setting
- Write protection setting from the CX-Programmer
- Write protection against FINS commands sent to the CPU Unit via networks
- Prohibiting creating a program file for file memory

6-7-1 Read Protection

Overview

It is possible to read-protect individual program tasks (called task read protection) or the entire user program (called UM read protection).

Read protection prevents anyone from displaying or editing the read-protected set of tasks or entire user program from CX-Programmer without inputting the correct password. If the password is input incorrectly five times consecutively, password input will be disabled for two hours, providing even better security for PLC data.

Operating Procedure

1,2,3... 1. Go online and select ***PLC - Protection - Release Password.*** The following Release Read Protection Dialog Box will be displayed.

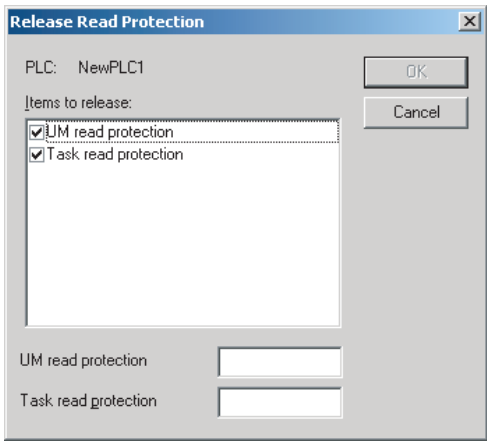

2. Input the password. If the password is incorrect, one of the following messages will be displayed and protection will not be released.

UM Read Protection

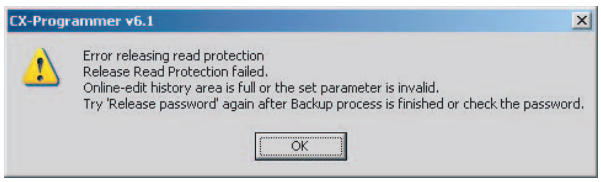

Task Read Protection

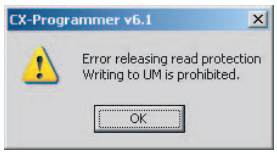

3. If an incorrect password is input five times consecutively, read protection will not be released even if the correct password is input on the sixth attempt and displaying and editing the entire user program or the specified tasks will be disabled for two hours.

Read Protection for Individual Tasks Using Passwords

Overview

It is possible to read-protect individual program tasks (referred to as “task read protection” below) or the entire PLC. The same password controls access to all of the read-protected tasks.

Task read protection prevents anyone from displaying or editing the read-protected set of tasks from CX-Programmer without inputting the correct password. In this case, the entire program can be uploaded, but the read-protected tasks cannot be displayed or edited without inputting the correct password. Tasks that are not read-protected can be displayed, edited, or modified with online editing.

Note Task read protection cannot be set if UM read protection is already set. However, it is possible to set UM read protection after task read protection has been set.

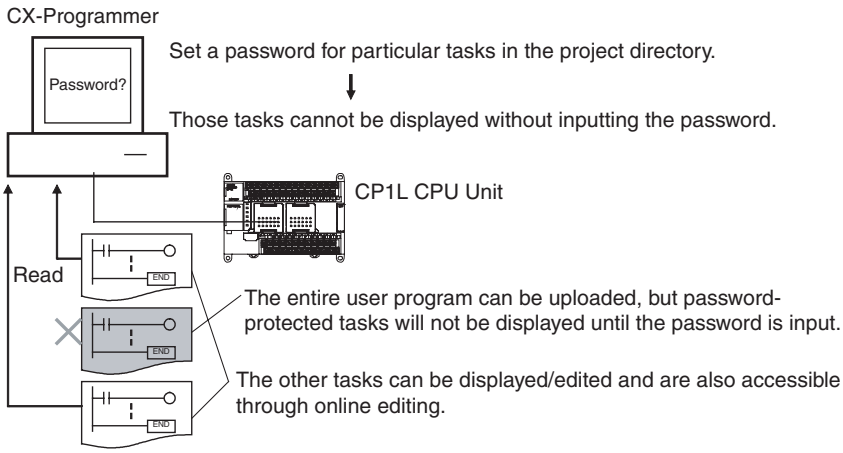

Operating Procedure

1,2,3... 1. Right-click the tasks that will be password-protected, select ***Properties*** from the pop-up menu, and select the *Task read protect* Option on the *Protection* Tab Page.

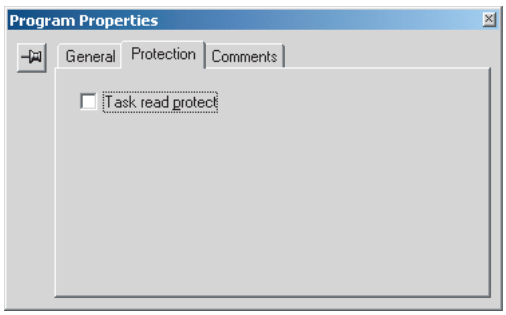

2. Display the *Protection* Tab of the PLC Properties Dialog Box and register a password in the *Task read protection* Box.

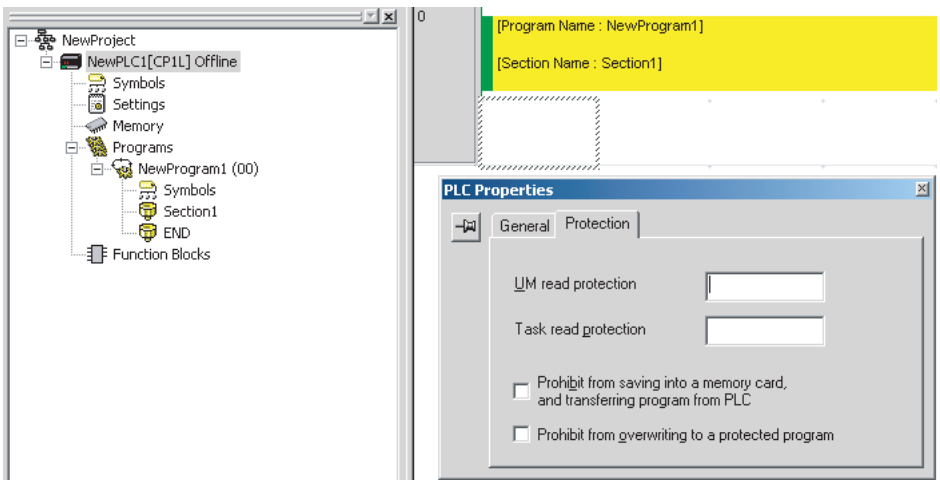

3. Connect online and select ***PLC - Transfer - To PLC*** to transfer the program. The tasks registered in step 2 will be password-protected.

Note The program can be transferred after step 1, above, and then password protection be set by selecting ***PLC - Protection - Set Password***. The tasks registered in step 1 will be password-protected.

Usage

Apply read protection to tasks when you want to convert those task programs to “black box” programs.

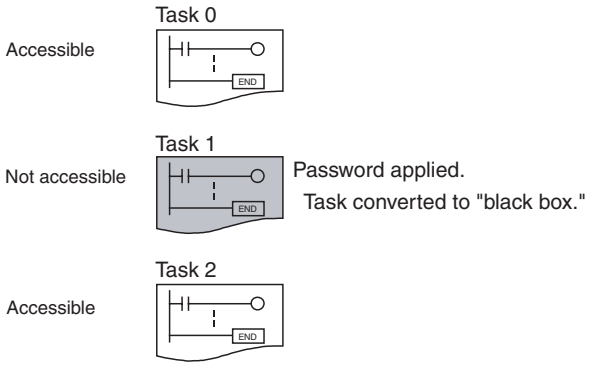

Note

1. If the CX-Programmer is used to read a task with task read protection applied, an error will occur and the task will not be read. Likewise, if the PT Ladder Monitor function is used to read a password protected task, an error will occur and the task will not be read.
2. The entire program can be transferred to another CPU Unit even if individual tasks in the program are read-protected. The task read protection will remain in effective for the password-protected tasks.
3. When the CX-Programmer is used to compare a user program in the computer's memory with a user program in the CPU Unit, password-protected tasks will be compared too.

Restrictions to Function Block Use

Function block definitions can be read even if the entire program or individual tasks in a program containing function blocks are read-protected. If required, set read protection individually for each function block.

Prohibiting Backing Up the Programs to a Memory Cassette

Overview

When a password is set for the entire user program or for a task from the CX-Programmer, prohibiting backing up the user program can be set as an option. Doing so will make it impossible to upload PLC data to the CX-Programmer and make it impossible to save PLC data offline to a storage device.

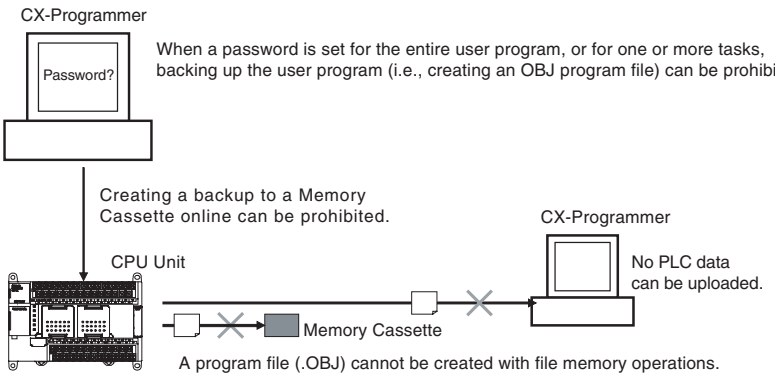

Operating Procedure

1,2,3...

1. When registering a password in the *UM read protection password* Box or *Task read protection* Box, select the *Prohibit from saving to a memory card*, *and transferring program from PLC* Option.

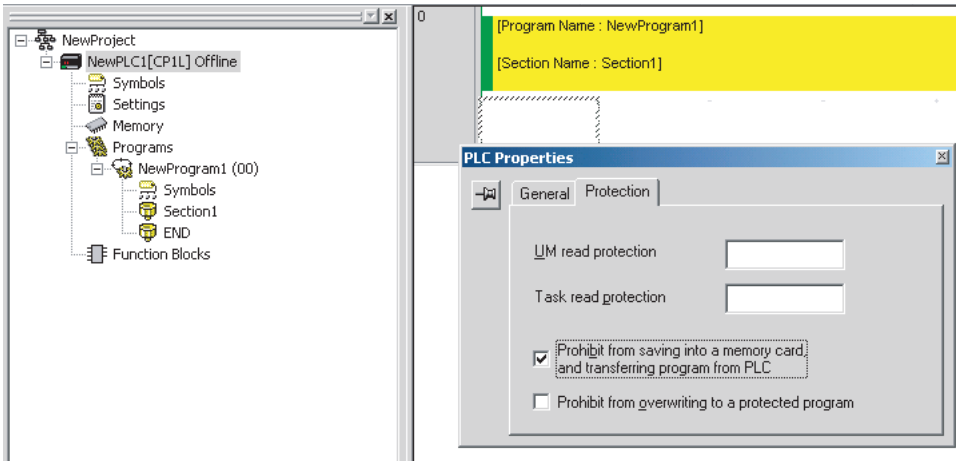

2. Go online and then either select ***PLC - Transfer - To PLC*** to transfer the program or select ***PLC - Protection - Set Password*** and click the **OK** button.

Application

The above procedure enables using a password to protect against disclosure of the program to unauthorized persons.

Note

(1) Copying the program is possible if read protection is not set.

(2) The setting to prohibit backing up the program is not effective until the program is transferred to the PLC. Always transfer the program after changing the setting.

Prohibiting Creating Program Files in File Memory

When a password is set for the entire user program or for a task from the CX-Programmer, prohibiting creating a program file (.OBJ) as a backup can be set as an option. Doing so will make it impossible to create a program file in file memory using the file memory operations. (This setting will also prohibit uploading PLC data to the CX-Programmer and saving PLC data to a storage device.)

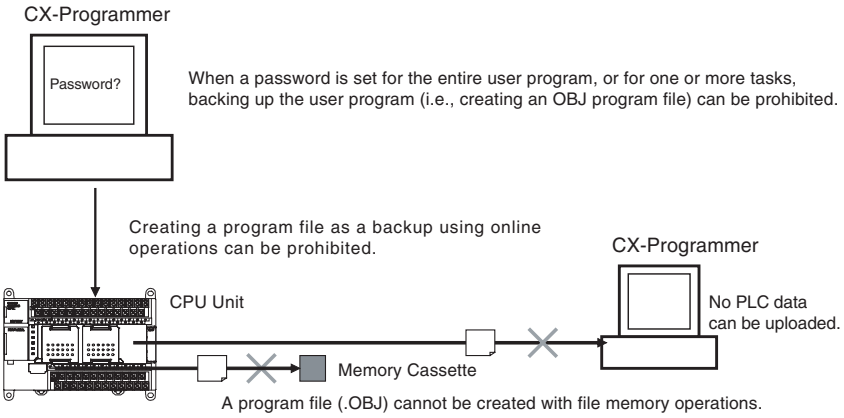

Operating Procedure

1,2,3...

1. When registering a password in the *UM read protection password* Box or *Task read protection* Box, select the *Prohibit from saving to a memory card, and transferring program from PLC* Option.

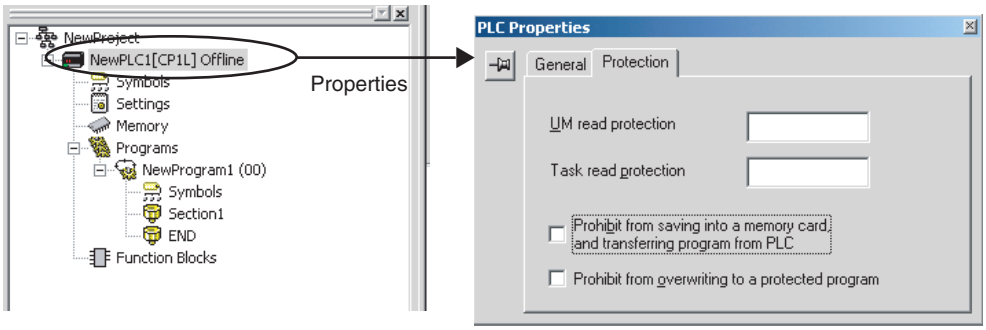

2. Go online and then either select ***PLC - Transfer - To PLC*** to transfer the program or select ***PLC - Protection - Set Password*** and click the **OK** button.

Application

The above procedure enables using a password to protect against disclosure of the program to unauthorized persons.

Note

(1) Copying the program is possible if read protection is not set.

(2) The setting to prohibit backing up the program is not effective until the program is transferred to the PLC. Always transfer the program after changing the setting.

Auxiliary Area Flags and Bits Related to Password Protection

Name	Bit address	Description
UM Read Protection Flag	A99.00	Indicates whether or not the PLC (the entire user program) is read-protected. OFF: UM read protection is not set. ON: UM read protection is set.
Task Read Protection Flag	A99.01	Indicates whether or not selected program tasks are read-protected. OFF: Task read protection is not set. ON: Task read protection is set.
Program Write Protection for Read Protection	A99.02	Indicates whether or not the write protection option has been selected to prevent overwriting of password-protected tasks or programs. OFF: Overwriting allowed ON: Overwriting prohibited (write-protected)
Enable/Disable Bit for Program Backup	A99.03	Indicates whether or not a backup program file (.OBJ file) can be created when UM read protection or task read protection is set. OFF: Creation of backup program file allowed ON: Creation of backup program file prohibited
UM Read Protection Release Enable Flag	A99.12	Indicates when UM read protection cannot be released because an incorrect password was input five times consecutively. OFF: Protection can be released ON: Protection cannot be released
Task Read Protection Release Enable Flag	A99.13	Indicates when task read protection cannot be released because an incorrect password was input five times consecutively. OFF: Protection can be released ON: Protection cannot be released

6-7-2 Write Protection

Write-protection Using the DIP Switch

The user program can be write-protected by turning ON pin 1 of the CPU Unit's DIP switch. When this pin is ON, it won't be possible to change the user program or parameter area (e.g., PLC Setup and routing tables) from the CX-Programmer. This function can prevent the program from being overwritten inadvertently at the work site.

It is still possible to read and display the program from the CX-Programmer when it is write-protected.

CPU Unit DIP Switch

Pin	Name	Settings
SW1	User Program Memory Write Protection	ON: Protected OFF: Not protected

Confirming the User Program Date

The dates the program and parameters were created can be confirmed by checking the contents of A90 to A97.

Auxiliary Area Words

Name	Address	Description	
User Program Date	A90 to A93	The time and date the user program was last overwritten in memory is given in BCD.	
		A90.00 to A90.07	Seconds (00 to 59 BCD)
		A90.08 to A90.15	Minutes (00 to 59 BCD)
		A91.00 to A91.07	Hour (00 to 23 BCD)
		A91.08 to A91.15	Day of month (01 to 31 BCD)
		A92.00 to A92.07	Month (01 to 12 BCD)
		A92.08 to A92.15	Year (00 to 99 BCD)
		A93.00 to A93.07	Day (00 to 06 BCD) Day of the week: 00: Sunday, 01: Monday, 02: Tuesday, 03: Wednesday, 04: Thursday, 05: Friday, 06: Saturday
Parameter Date	A94 to A97	The time and date the parameters were last overwritten in memory is given in BCD. The format is the same as that for the User Program Date given above.	

Write-protection Using Passwords

The program (or selected tasks) can also be write-protected if the write protection option is selected from the CX-Programmer when a password is being registered for the entire program or those selected tasks. The write protection setting can prevent unauthorized or accidental overwriting of the program.

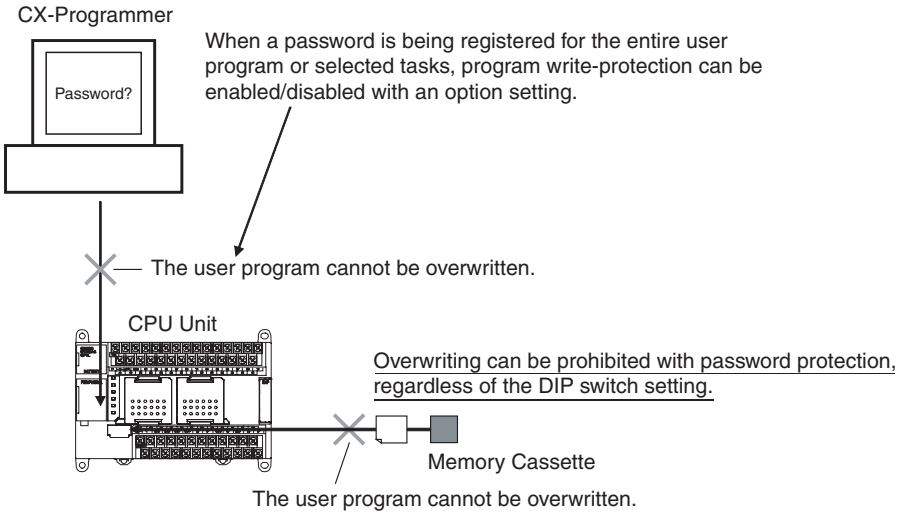

Note

1. If the selected tasks are write-protected by selecting this option when registering a password, only the tasks (program) that are password-protected will be protected from overwriting. It will still be possible to overwrite other tasks with operations such as online editing and task downloading.
2. All tasks (programs) can be overwritten when program read protection is not enabled.

Operating Procedure

1,2,3... **Table 1 When registering a password in the *UM read protection password* Box or *Task read protection* Box, select the *Prohibit from overwriting to a protected program* Option.**

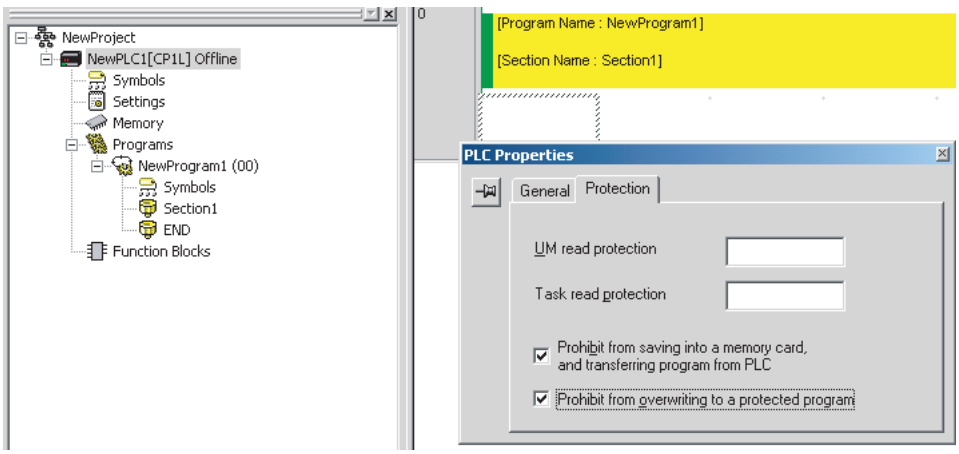

3. Either select ***PLC - Transfer - To PLC*** to transfer the program or select ***PLC - Protection - Set Password*** and click the **OK** button.

Note The setting to enable/disable creating file memory program files will not take effect unless the program is transferred to the CPU Unit. Always transfer the program after changing this setting.

Write Protection against FINS Commands Sent to the CPU Unit via Networks

It is possible to prohibit write operations and other editing operations sent to the PLC's CPU Unit as FINS commands through a network (including write operations from CX-Programmer, CX-Protocol, CX-Process, and other applications using Fins Gateway). Read processes are not prohibited.

FINS write protection can disable write processes such as downloading the user program, PLC Setup, or I/O memory, changing the operating mode, and performing online editing.

It is possible to exclude selected nodes from write protection so that data can be written from those nodes.

An event log in the CPU Unit automatically records all write processes sent through the network and that log can be read with a FINS command.

6-7-3 Protecting Program Execution Using the Lot Number

The lot number is stored in A310 and A311 and can be used to prevent the program from being executed on a CPU Unit with the wrong lot number.

The following instructions can be added to the program to create a fatal error and thus prevent program execution if an attempt is made to execute the program on a CPU Unit with the incorrect lot number. A password can also be set to read-protect the program so that it cannot be copied, e.g., using a Memory Cassette.

The lot number stored in A310 and A311 cannot be changed by the user.

The upper digits of the lot number are stored in A311 and the lower digits are stored in A310, as shown below.

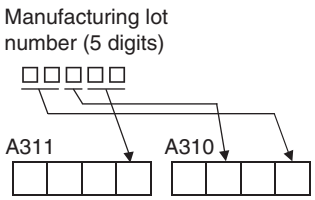

X, Y, and Z in the lot number are converted to 10, 11, and 12, respectively, in A310 and A311. Some examples are given below.

Lot number	A311	A310
01805	0005	0801
30Y05	0005	1130

Ladder Programming Example

- The following instructions will create a fatal error to prevent the program from being executed when the lot number is not 23905.

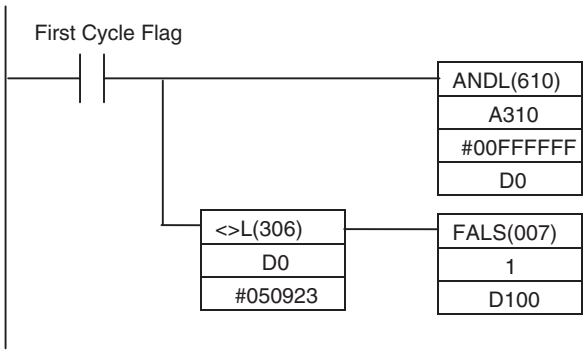

- The following instructions will create a fatal error to prevent the program from being executed when the lot number does not end in 05.

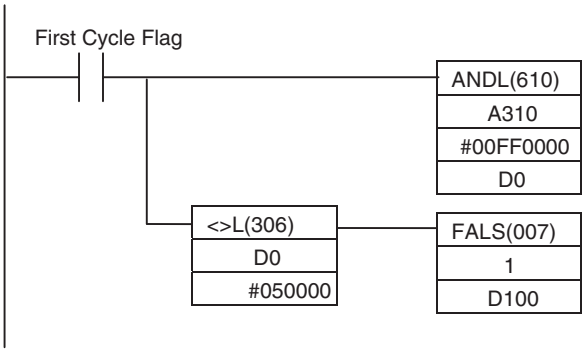

- The following instructions will create a fatal error to prevent the program from being executed when the lot number does not begin with 23Y.

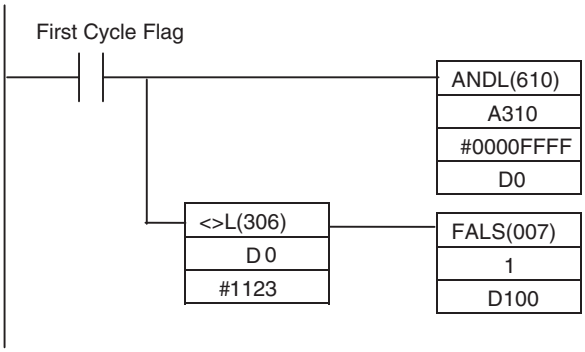

6-8 Failure Diagnosis Functions

This section introduces the following functions.

- Failure Alarm Instructions: FAL(006) and FALS(007)
- Failure Point Detection: FPD(269)
- Output OFF Bit

6-8-1 Failure Alarm Instructions: FAL(006) and FALS(007)

The FAL(006) and FALS(007) instructions generate user-defined errors. FAL(006) generates a non-fatal error that allows program execution to continue and FALS(007) generates a fatal error that stops program execution.

When the user-defined error conditions (i.e., the execution conditions for FAL(006) or FAL(007)) are met, the instruction will be executed and the following processing will be performed.

1,2,3...

1. The FAL Error Flag (A402.15) or FALS Error Flag (A401.06) is turned ON.
2. The corresponding error code is written to A400.
3. The error code and time of occurrence are stored in the Error Log.
4. The error indicator on the front of the CPU Unit will flash or light.
5. If FAL(006) has been executed, the CPU Unit will continue operating.
   If FALS(007) has been executed, the CPU Unit will stop operating. (Program execution will stop.)

Operation of FAL(006)

When execution condition A goes ON, an error with FAL number 002 is generated, A402.15 (FAL Error Flag) is turned ON, and A360.02 (FAL Number 002 Flag) is turned ON. Program execution continues.

Errors generated by FAL(006) can be cleared by executing FAL(006) with FAL number 00 or performing the error read/clear operation from the CX-Programmer.

Operation of FALS(007)

When execution condition B goes ON, an error with FALS number 003 is generated, and A401.06 (FALS Error Flag) is turned ON. Program execution is stopped.

Errors generated by FAL(006) can be cleared by eliminating the cause of the error and performing the error read/clear operation from the CX-Programmer.

6-8-2 Failure Point Detection: FPD(269)

FPD(269) performs time monitoring and logic diagnosis. The time monitoring function generates a non-fatal error if the diagnostic output isn't turned ON within the specified monitoring time. The logic diagnosis function indicates which input is preventing the diagnostic output from being turned ON.

Time Monitoring Function

FPD(269) starts timing when it is executed and turns ON the Carry Flag if the diagnostic output isn't turned ON within the specified monitoring time. The Carry Flag can be programmed as the execution condition for an error processing block. Also, FPD(269) can be programmed to generate a non-fatal FAL error with the desired FAL number.

When an FAL error is generated, a preset message will be registered and can be displayed on the CX-Programmer. FPD(269) can be set to output the results of logic diagnosis (the address of the bit preventing the diagnostic output from being turned ON) just before the message.

The teaching function can be used to automatically determine the actual time required for the diagnostic output to go ON and set the monitoring time.

Logic Diagnosis Function

FPD(269) determines which input bit is causing the diagnostic output to remain OFF and outputs the result. The output can be set to bit address output (PLC memory address) or message output (ASCII).

If bit address output is selected, the PLC memory address of the bit can be transferred to an Index Register and the Index Register can be indirectly addressed in later processing.

If the message output is selected, an error message can be displayed on the CX-Programmer at the same time as a FAL error is generated for time monitoring.

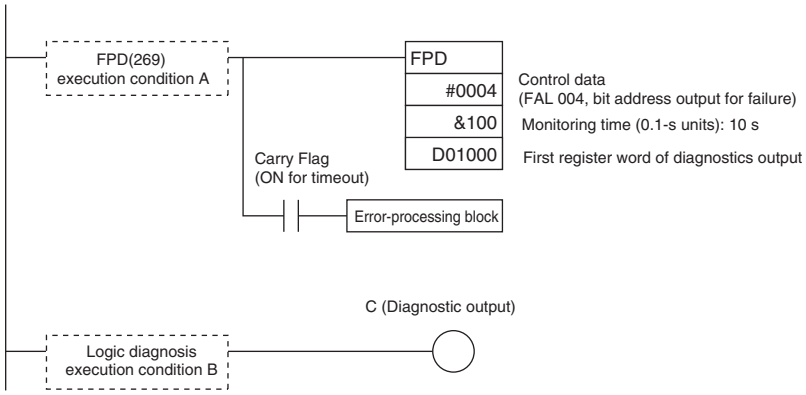

Time Monitoring

Monitors whether output C goes ON with 10 seconds after input A. If C doesn't go ON within 10 seconds, a failure is detected and the Carry Flag is turned ON. The Carry Flag executes the error-processing block. Also, an FAL error (non-fatal error) with FAL number 004 is generated.

Logic Diagnosis

FPD(269) determines which input bit in block B is preventing output C from going ON. That bit address is output to D1000 and D1001.

Auxiliary Area Flags and Words

Name	Address	Operation
Error Code	A400	When an error occurs, the error code is stored in A400.
FAL Error Flag	A402.15	Turns ON when FAL(006) is executed.
FALS Error Flag	A401.06	Turns ON when FALS(007) is executed.
Executed FAL Number Flags	A360 to A391	The corresponding flag turns ON when an FAL(006) error occurs.
Error Log Area	A100 to A199	The Error Log Area contains information on the most recent 20 errors.
Error Log Pointer	A300	When an error occurs, the Error Log Pointer is incremented by 1 to indicate where the next error record will be recorded as an offset from the beginning of the Error Log Area (A100).
Error Log Pointer Reset Bit	A500.14	Turn this bit ON to reset the Error Log Pointer (A300) to 00.
FPD Teaching Bit	A598.00	Turn this bit ON when you want the monitoring time to be set automatically when FPD(269) is executed.

6-8-3 Simulating System Errors

FAL(006) and FALS(007) can be used to intentionally create fatal and non-fatal system errors. This can be used in system debugging to test display messages on Programmable Terminals (PTs) or other operator interfaces.

Use the following procedure.

1,2,3...

1. Set the FAL or FALS number to use for simulation in A529. A529 is used when simulating errors for both FAL(006) and FALS(007).
2. Set the FAL or FALS number to use for simulation as the first operand of FAL(006) or FALS(007).

3. Set the error code and error to be simulated as the second operand (two words) of FAL(006) or FALS(007). Indicate a nonfatal error for FAL(006) and a fatal error for FALS(007).

To simulate more than one system error, use more than one FAL(006) or FALS(007) instruction with the same value in A529 and different values for the second operand.

Auxiliary Area Flags and Words

Name	Address	Operation
FAL/FALS Number for System Error Simulation	A529	Set a dummy FAL/FALS number to use to simulate a system error. 0001 to 01FF hex: FAL/FALS numbers 1 to 511 0000 or 0200 to FFFF hex: No FAL/FALS number for system error simulation.

Example for a Battery Error

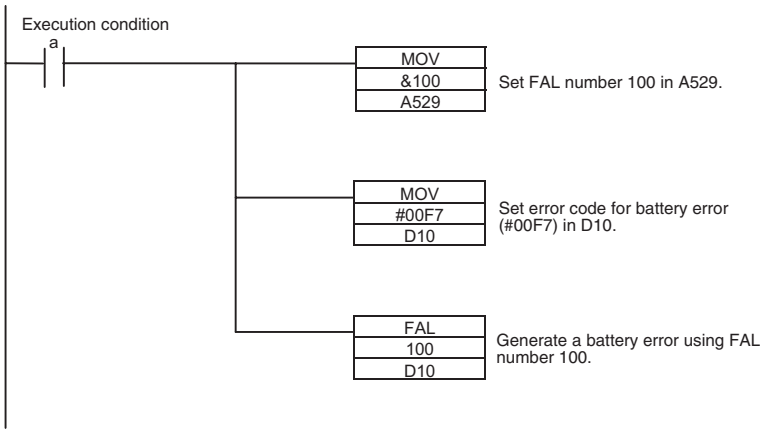

Note Use the same methods as for actual system errors to clear the simulated system errors. Refer to the *11-2 Troubleshooting* for details. All system errors simulated with FAL(006) and FALS(007) can be cleared by cycling the power supply.

6-8-4 Output OFF Bit

As an emergency measure when an error occurs, all outputs from Output Units can be turned OFF by turning ON the Output OFF Bit (A500.15). The operating mode will remain in RUN or MONITOR mode, but all outputs will be turned OFF.

Note Normally (when IOM Hold Bit = OFF), all outputs from Output Units are turned OFF when the operating mode is changed from RUN/MONITOR mode to PROGRAM mode. The Output OFF Bit can be used to turn OFF all outputs without switching to PROGRAM mode.

Application Precaution for DeviceNet

When the CPM1A-DRT21 is used, all slave outputs will be turned OFF, i.e., all inputs to the master will be OFF.

6-9 Clock

A clock is built into the CP1L CPU Unit and is backed up by a battery. The current data is stored in the following words and refreshed each cycle.

Name	Addresses	Function
Clock data: A351 to A354	A351.00 to A351.07	Second: 00 to 59 (BCD)
	A351.08 to A351.15	Minute: 00 to 59 (BCD)
	A352.00 to A352.07	Hour: 00 to 23 (BCD)
	A352.08 to A352.15	Day of the month: 00 to 31 (BCD)
	A353.00 to A353.07	Month: 00 to 12 (BCD)
	A353.08 to A353.15	Year: 00 to 99 (BCD)
	A354.00 to A354.07	Day of the week: 00: Sunday, 01: Monday, 02: Tuesday, 03: Wednesday, 04: Thursday, 05: Friday, 06: Saturday

Note The clock cannot be used if a battery is not installed or the battery voltage is low.

Auxiliary Area Flags and Words

Name	Addresses	Contents
Start-up Time	A510 and A511	The time at which the power was turned ON (year, month, day of month, hour, minutes, and seconds).
Power Interruption Time	A512 and A513	The time at which the power was last interrupted (year, month, day of month, hour, minutes, and seconds).
Power ON Clock Data 1	A720 to A722	Consecutive times at which the power was turned ON (year, month, day of month, hour, minutes, and seconds). The times are progressively older from number 1 to number 10.
Power ON Clock Data 2	A723 to A725	
Power ON Clock Data 3	A726 to A728	
Power ON Clock Data 4	A729 to A731	
Power ON Clock Data 5	A732 to A734	
Power ON Clock Data 6	A735 to A737	
Power ON Clock Data 7	A738 to A740	
Power ON Clock Data 8	A741 to A743	
Power ON Clock Data 9	A744 to A746	
Power ON Clock Data 10	A747 to A749	
Operation Start Time	A515 to A517	The time that operation started (year, month, day of month, hour, minutes, and seconds).
Operation End Time	A518 to A520	The time that operation stopped (year, month, day of month, hour, minutes, and seconds).
User Program Date	A90 to A93	The time when the user program was last overwritten (year, month, day of month, hour, minutes, and seconds).
Parameter Date	A94 to A97	The time when the parameters were last overwritten (year, month, day of month, hour, minutes, and seconds).

Time-related Instructions

Name	Mnemonic	Function
HOURS TO SECONDS	SEC(065)	Converts time data in hours/minutes/seconds format to an equivalent time in seconds only.
SECONDS TO HOURS	HMS(066)	Converts seconds data to an equivalent time in hours/minutes/seconds format.
CALENDAR ADD	CADD(730)	Adds time to the calendar data in the specified words.
CALENDAR SUBTRACT	CSUB(731)	Subtracts time from the calendar data in the specified words.
CLOCK ADJUSTMENT	DATE(735)	Changes the internal clock setting to the setting in the specified source words.

SECTION 7
Using Expansion Units and Expansion I/O Units

This section describes how to use CP-series/CPM1A-series Expansion Units and Expansion I/O Units.

7-1 Connecting Expansion Units and Expansion I/O Units 422
7-2 Analog Input Units 423
7-3 Analog Output Units 432
7-4 Analog I/O Units 440
7-4-1 CPM1A-MAD01 Analog I/O Units 440
7-4-2 CP1W-MAD11/CPM1A-MAD11 Analog I/O Units 450
7-5 Temperature Sensor Units 463
7-6 CompoBus/S I/O Link Units 478
7-7 DeviceNet I/O Link Units 484

7-1 Connecting Expansion Units and Expansion I/O Units

CP-series and CPM1A-series Expansion Units and Expansion I/O Units can be connected to the CP1L. Up to three Expansion Units or Expansion I/O Units can be connected to a CPU Unit with 30, 40 or 60 I/O points and one Expansion Unit or Expansion I/O Unit can be connected to a CPU Unit with 20 or 14 I/O points.

The functionality and performance of CP-series Expansion Units and Expansion I/O Units is the same as the functionality and performance of CP1MA-series Expansion Units and Expansion I/O Units. CP-series Units are black, and CPM1A-series Units are ivory.

Number of I/O Words

Unit name		Model	Current consumption (mA)		I/O words	
			5 VDC	24 VDC	Input	Output
Expansion Units	Analog Input Unit	CP1W-AD041 CPM1A-AD041	100	90	4	2
	Analog Output Unit	CP1W-DA021	40	95	---	2
		CP1W-DA041 CPM1A-DA041	80	124	---	4
	Analog I/O Unit	CPM1A-MAD01	66	66	2	1
		CP1W-MAD11 CPM1A-MAD11	83	110		
	Temperature Control Unit	CP1W-TS001 CPM1A-TS001	40	59	2	---
		CP1W-TS101 CPM1A-TS101	54	73		
		CP1W-TS002 CPM1A-TS002	40	59	4	---
		CP1W-TS102 CPM1A-TS102	54	73		
	CompoBus/S I/O Link Unit	CP1W-SRT21 CPM1A-SRT21	29	---	1	1
	DeviceNet I/O Link Unit	CPM1A-DRT21	48	---	2	2
Expansion I/O Units	40-point I/O Unit	CP1W-40EDR CPM1A-40EDR	80	90	2	2
		CP1W-40EDT CPM1A-40EDT	160	---		
		CP1W-40EDT1 CPM1A-40EDT1	160	---		
	32-point Output Unit	CP1W-32ER	49	131	---	4
		CP1W-32ET	113	---		
		CP1W-32ET1	113	---		
	20-point I/O Unit	CP1W-20EDR1 CPM1A-20EDR1	103	44	1	1
		CP1W-20EDT CPM1A-20EDT	130	---		
		CP1W-20EDT1 CPM1A-20EDT1	130	---		
	16-point Output Unit	CP1W-16ER CPM1A-16ER	42	90	---	2
		CP1W-16ET	76	---		
		CP1W-16ET1	76	---		
	8-point Input Unit	CP1W-8ED CPM1A-8ED	18	---	1	---
	8-point Output Unit	CP1W-8ER CPM1A-8ER	26	44	---	1
		CP1W-8ET CPM1A-8ET	75	---		
		CP1W-8ET1 CPM1A-8ET1	75	---		

Note CP1W-32ER/32ET/32ET1's maximum number of simultaneously ON points is 24 (75%).

Allocation of I/O Words

Expansion Units and Expansion I/O Units are allocated I/O bits in the order the Units are connected starting from the CPU Unit. When the power to the CPU Unit is turned ON, the CPU Unit checks for any Expansion Units and Expansion I/O Units connected to it and automatically allocates I/O bits

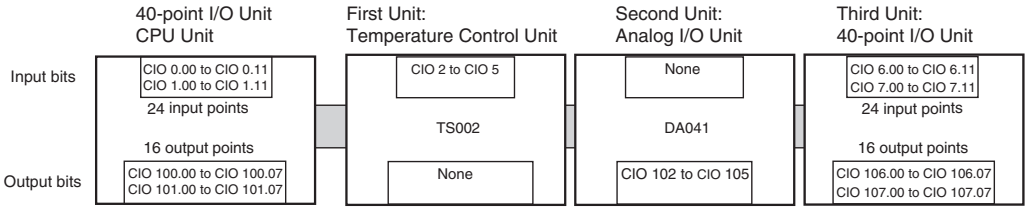

7-2 Analog Input Units

Each CP1W-AD041/CPM1A-AD041 Analog Input Unit provides four analog inputs.

- The analog input signal ranges are 0 to 5 V, 1 to 5 V, 0 to 10 V, -10 to +10 V, 0 to 20 mA, and 4 to 20 mA. The resolution is 1/6,000. The open-circuit detection function is activated in the ranges of 1 to 5 V and 4 to 20 mA.
- The Analog Input Unit uses four input words and two output words, so a maximum of three Units can be connected.

Part Names

CP1W-AD041/CPM1A-AD041

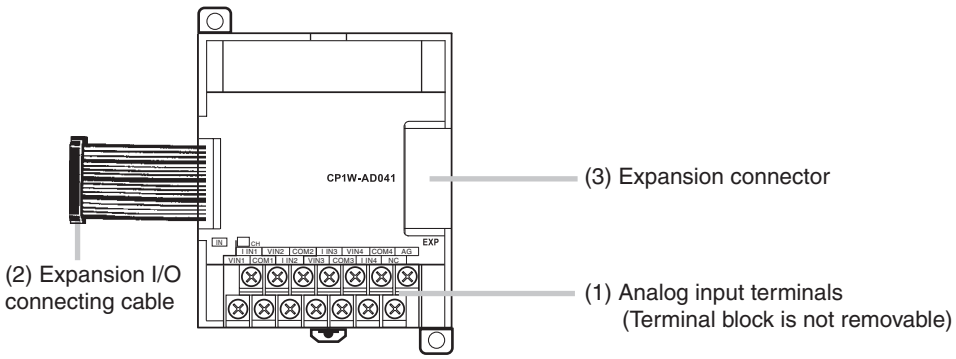

1. Analog Input Terminals
   Connected to analog output devices.

■ **Input Terminal Arrangement**

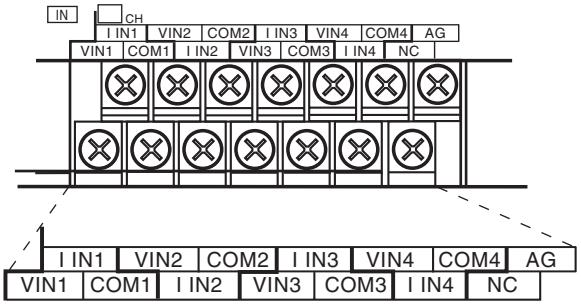

V IN1	Voltage input 1
I IN1	Current input 1
COM1	Input common 1
V IN2	Voltage input 2
I IN2	Current input 2
COM2	Input common 2
V IN3	Voltage input 3
I IN3	Current input 3
COM3	Input common 3
V IN4	Voltage input 4
I IN4	Current input 4
COM4	Input common 4

Note When using current inputs, voltage input terminals must be short-circuited with current input terminals.

2. Expansion I/O Connecting Cable
   Connected to the CPU Unit or Expansion Unit expansion connector. The cable is attached to the Analog Input Unit and cannot be removed.

Note Do not touch the cables during operation. Static electricity may cause operating errors.

3. Expansion Connector
   Connected to the next Expansion Unit or Expansion I/O Unit to enable expansion.

Main Analog Input Unit Specifications

Analog Input Units are connected to a CP1L CPU Unit. For CP1L M-type CPU Units, a maximum of three Units can be connected, including other Expansion Units and Expansion I/O Units. For CP1L L-type CPU Units, a maximum of one Unit can be connected.

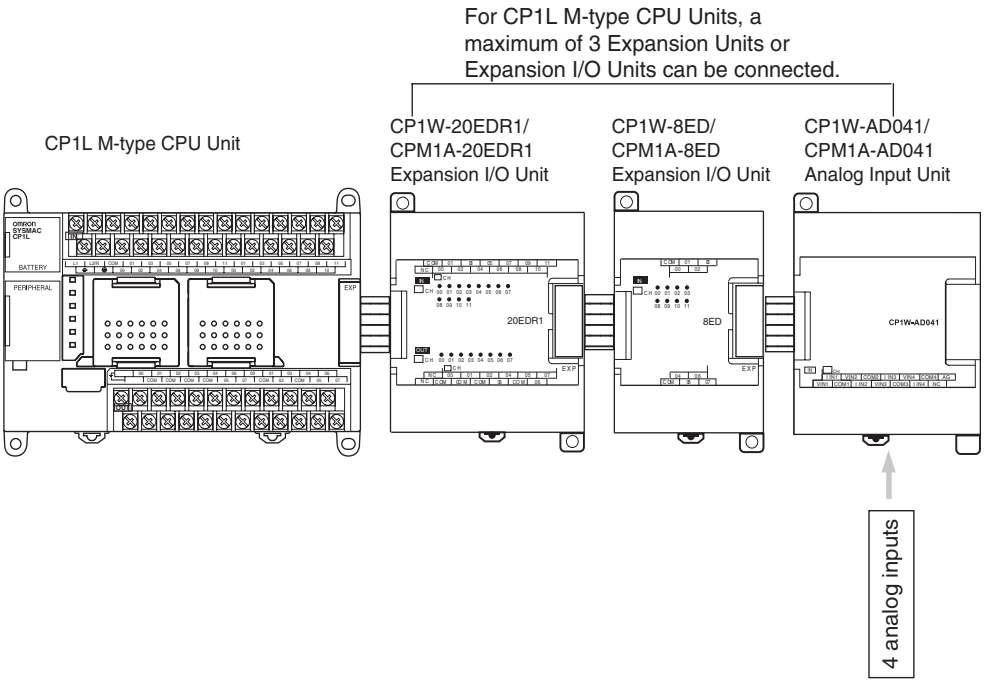

Item		Voltage Input	Current Input
Number of inputs		4 inputs (4 words allocated)	
Input signal range		0 to 5 VDC, 1 to 5 VDC, 0 to 10 VDC, or –10 to 10 VDC	0 to 20 mA or 4 to 20 mA
Max. rated input		±15 V	±30 mA
External input impedance		1 MΩ min.	Approx. 250 Ω
Resolution		1/6000 (full scale)	
Overall accuracy	25°C	0.3% full scale	0.4% full scale
	0 to 55°C	0.6% full scale	0.8% full scale
A/D conversion data		16-bit binary (4-digit hexadecimal) Full scale for –10 to 10 V: F448 to 0BB8 Hex Full scale for other ranges: 0000 to 1770 Hex	
Averaging function		Supported (Set in output words n+1 and n+2.)	
Open-circuit detection function		Supported	
Conversion time		2 ms/point (8 ms/all points)	
Isolation method		Photocoupler isolation between analog I/O terminals and internal circuits. No isolation between analog I/O signals.	
Current consumption		5 VDC: 100 mA max.; 24 VDC: 90 mA max.	

Analog Input Signal Ranges

Analog input data is digitally converted according to the input signal range as shown below.

Note When the input exceeds the specified range, the A/D conversion data will be fixed at either the lower limit or upper limit.

Analog Input Signal Ranges

■ −10 to 10 V Inputs

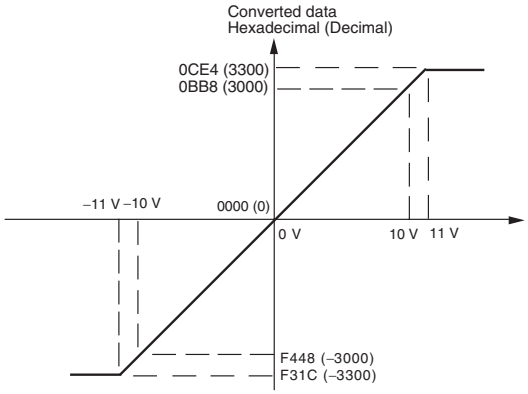

Voltage in the -10 to 10 V range corresponds to hexadecimal values F448 to 0BB8 (-3,000 to 3,000). The range of data that can be converted is F31C to 0CE4 hex (-3,300 to 3,300). A negative voltage is expressed as two's complement.

■ 0 to 10 V Inputs

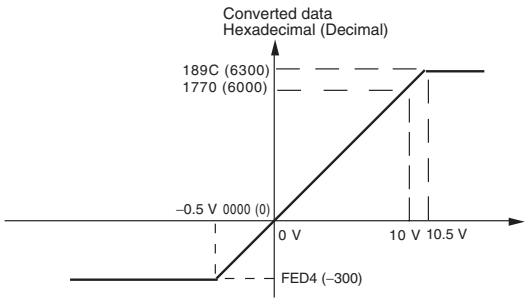

Voltage in the 0 to 10 V range corresponds to hexadecimal values 0000 to 1770 (0 to 6,000). The range of data that can be converted is FED4 to 189C hex (-300 to 6,300). A negative voltage is expressed as two's complement.

■ 0 to 5 V Inputs

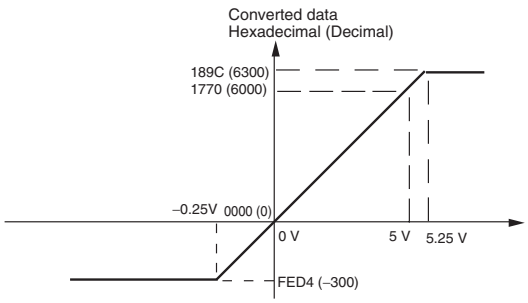

Voltage in the 0 to 5 V range corresponds to hexadecimal values 0000 to 1770 (0 to 6,000). The range of data that can be converted is FED4 to 189C hex (-300 to 6,300). A negative voltage is expressed as two's complement.

■ 1 to 5 V Inputs

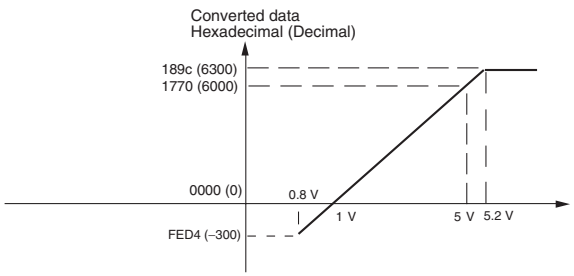

Voltage in the 1 to 5 V range corresponds to hexadecimal values 0000 to 1770 (0 to 6,000). The range of data that can be converted is FED4 to 189C hex (-300 to 6,300). Voltage in the range of 0.8 to 1 V is expressed as two's complement.

If an input is below the range (i.e., less than 0.8 V), the open-circuit detection function is activated and the data becomes 8,000.

■ 0 to 20 mA Inputs

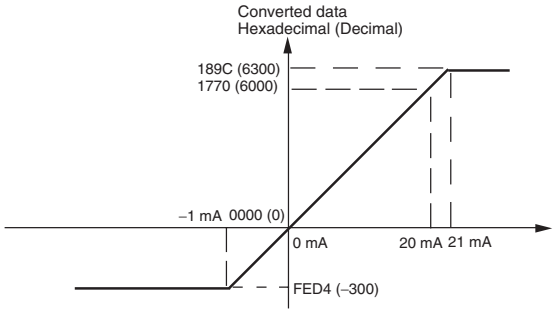

Current in the 0 to 20 mA range corresponds to hexadecimal values 0000 to 1770 (0 to 6,000). The range of data that can be converted is FED4 to 189C hex (-300 to 6,300). A negative current is expressed as two's complement.

■ 4 to 20 mA Inputs

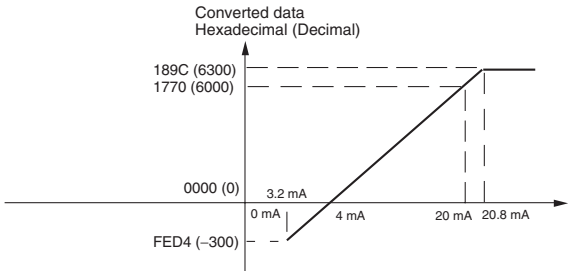

Current in the 4 to 20 mA range corresponds to hexadecimal values 0000 to 1770 (0 to 6,000). The range of data that can be converted is FED4 to 189C hex (-300 to 6,300). Current in the range of 3.2 to 4 mA is expressed as two's complement.

If an input is below the range (i.e., less than 3.2 mA), the open-circuit detection function is activated and the data becomes 8,000.

Averaging Function

For analog inputs, the averaging function operates when the averaging bit is set to 1. The averaging function outputs the average (a moving average) of the last eight input values as the converted value. If there is only a slight variation in inputs, it is handled by the averaging function as a smooth input.

The averaging function stores the average (a moving average) of the last eight input values as the converted value. Use this function to smooth inputs that vary at a short interval.

Open-circuit Detection Function

The open-circuit detection function is activated when the input range is set to 1 to 5 V and the voltage drops below 0.8 V, or when the input range is set to 4 to 20 mA and the current drops below 3.2 mA. When the open-circuit detection function is activated, the converted data will be set to 8,000.

The time for enabling or clearing the open-circuit detection function is the same as the time for converting the data. If the input returns to the convertible range, the open-circuit detection is cleared automatically and the output returns to the normal range.

Procedure

Connect and wire Units.

↓

Create a ladder program

- Connect Analog Input Units.
- Wire to analog output devices.

- Write set data to output words (n+1, n+2).
  - Set use of inputs.
  - Select input signals using range codes.
  - Set use of averaging.
- Read A/D conversion values from input words (m+1 to m+4).
- For current inputs, confirm that there is no open circuit.

Writing Set Data and Reading A/D Conversion Values

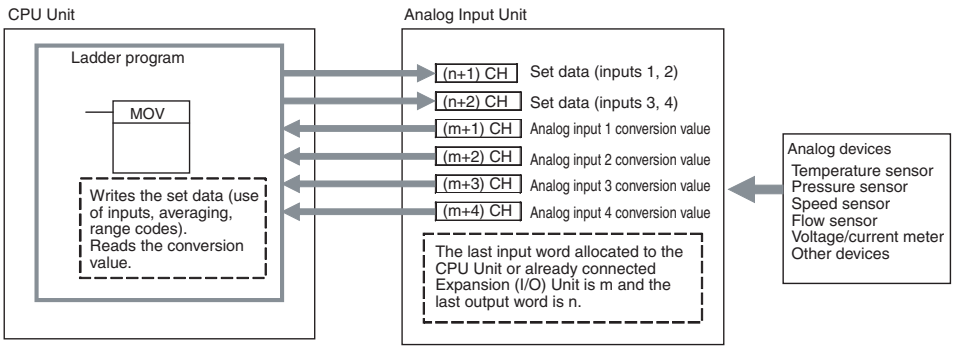

1. Connecting the Analog Input Unit

Connect the Analog Input Unit to the CPU Unit.

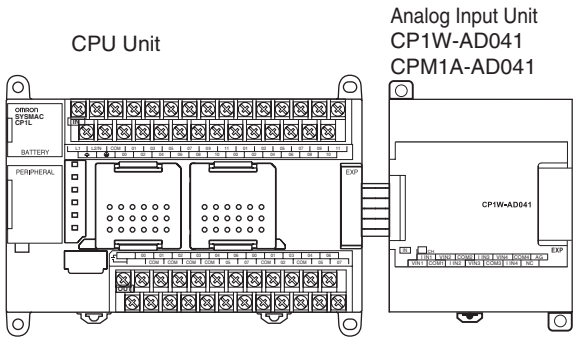

2. Wiring Analog Inputs

Internal Circuits

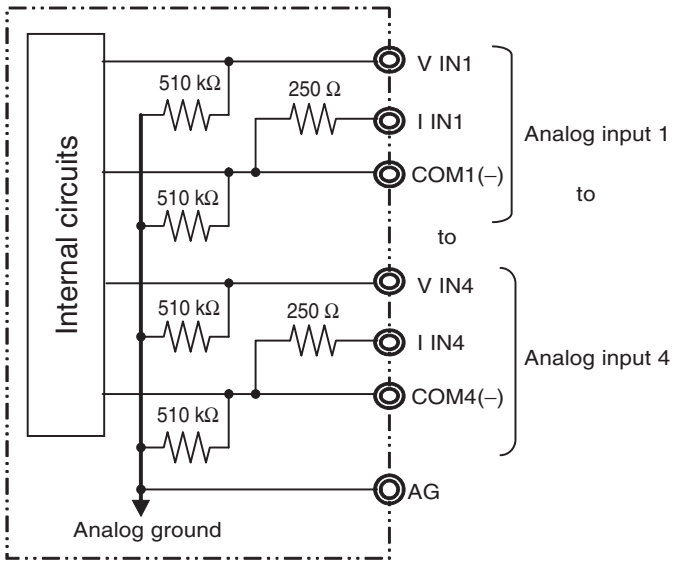

■ **Wiring for Analog Inputs**

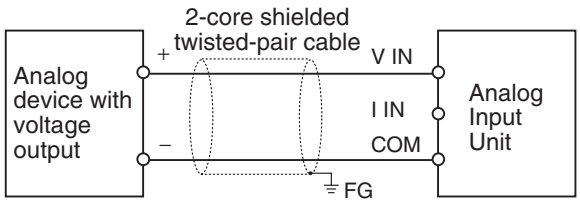

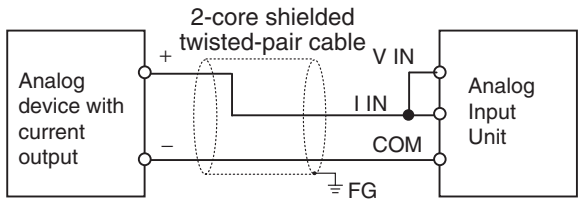

Note

(1) Connect the shield to the FG terminal to prevent noise.

(2) When an input is not being used, short the + and – terminals.

(3) Separate wiring from power lines (AC power supply lines, high-voltage lines, etc.)

(4) When there is noise in the power supply line, install a noise filter on the input section and the power supply.

(5) Refer to the following information on open circuits when using voltage inputs.

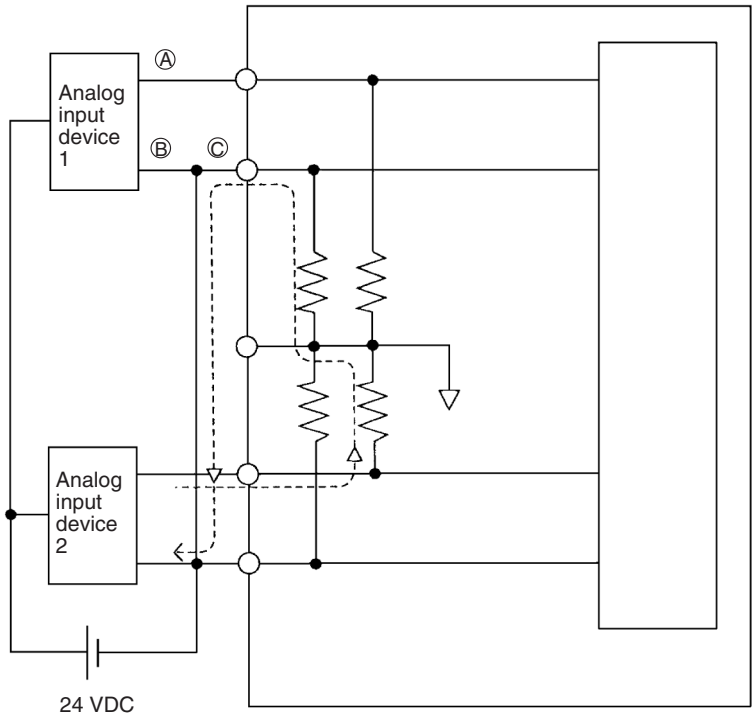

For example, if analog input device 2 is outputting 5 V and the same power supply is being used as shown above, about 1/3, or 1.6 V, will be applied at the input for input device 1.

Consider the following information on open input circuits when using voltage inputs. Either use separate power supplies, or install an isolator at each input.

If the same power supply is used as shown in the following diagram and an open circuit occurs at point A or B, an unwanted current flow will occur as shown by the dotted lines in the diagram, creating a voltage at the other input of about 1/3 to 1/2. If the 1 to 5-V range is being used, the open-circuit detection function will not operate. Also, if there is an open circuit at C, the open-circuit detection function will not operate because the negative sides are the same.

3. Creating the Ladder Program

Allocating I/O Words

Four input words and two output words are allocated from the next words following the last I/O words allocated to the CPU Unit or an existing Expansion Unit or Expansion I/O Unit.

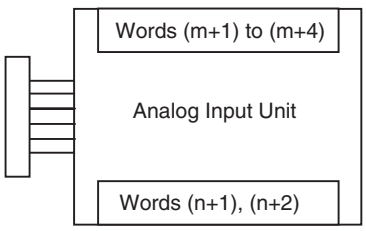

Writing Set Data

Write the settings for input use, averaging use, and range codes for words n+1 and n+2. When the set data is transferred from the CPU Unit to the Analog I/O Unit, the A/D conversion will be started.

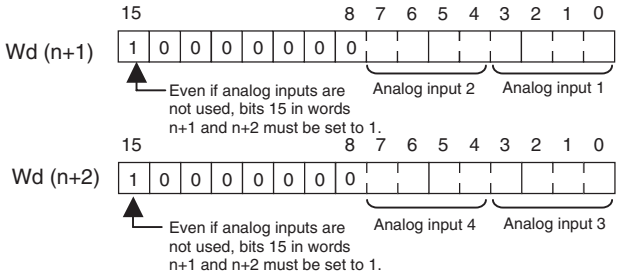

■ **Set Data**

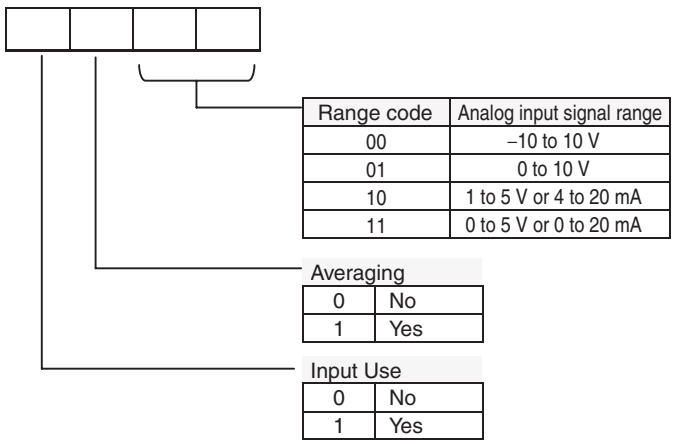

Range code	Analog input signal range
00	−10 to 10 V
01	0 to 10 V
10	1 to 5 V or 4 to 20 mA
11	0 to 5 V or 0 to 20 mA

Averaging

0	No
1	Yes

Input Use

0	No
1	Yes

- The Analog Input Unit will not start converting analog I/O values until the range code has been written.
- Once the range code has been set, it is not possible to change the setting while power is being supplied to the CPU Unit. To change the I/O range, turn the CPU Unit OFF then ON again.

Averaging

Set whether averaging is to be used for set data. When the averaging bit is set to 1, the average (moving average) for the past eight inputs is output as conversion data.

Reading Analog Input Conversion Values

Read the conversion value storage area with the ladder program. With word m as the last input word allocated to the CPU Unit or an already-connected Expansion Unit, the A/D conversion data will be output to the following words m+1 to m+4.

Startup Operation

After the power is turned ON, it will require two cycle times plus approximately 50 ms before the first conversion data is stored in the input words. Therefore, create a program as shown below, so that when operation begins simultaneously with startup it will wait for valid conversion data.

The analog input data will be 0000 until the initial processing is completed.

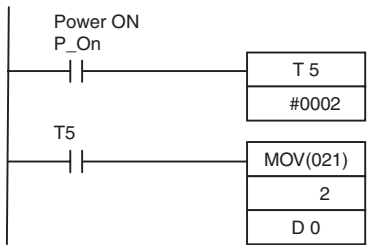

TIM5 is started when the power is turned ON. After 0.1 to 0.2 s (100 to 200 ms) elapses, the TIM5 contact turns ON and the analog input 1 conversion data stored in word 2 is transferred to DM0.

Handling Unit Errors

- When an error occurs in an Analog Input Unit, the analog input conversion data becomes 0000.

- Expansion Unit errors are output to bits 0 to 6 of word A436. The bits are allocated from A436.00 in order starting with the Unit nearest the CPU Unit. Use these flags in the program when it is necessary to detect errors.

Ladder Program Example

Analog input	Input range	Range code	Averaging	Set data	Destination word
Input 1	0 to 10 V	01	Yes	1101 (D hex)	n+1
Input 2	4 to 20 mA	10	Yes	1110 (E hex)	n+1
Input 3	-10 to +10 V	00	No	1000 (8 hex)	n+2
Input 4	Not used.	-(00)	---	0000 (0 hex)	n+2

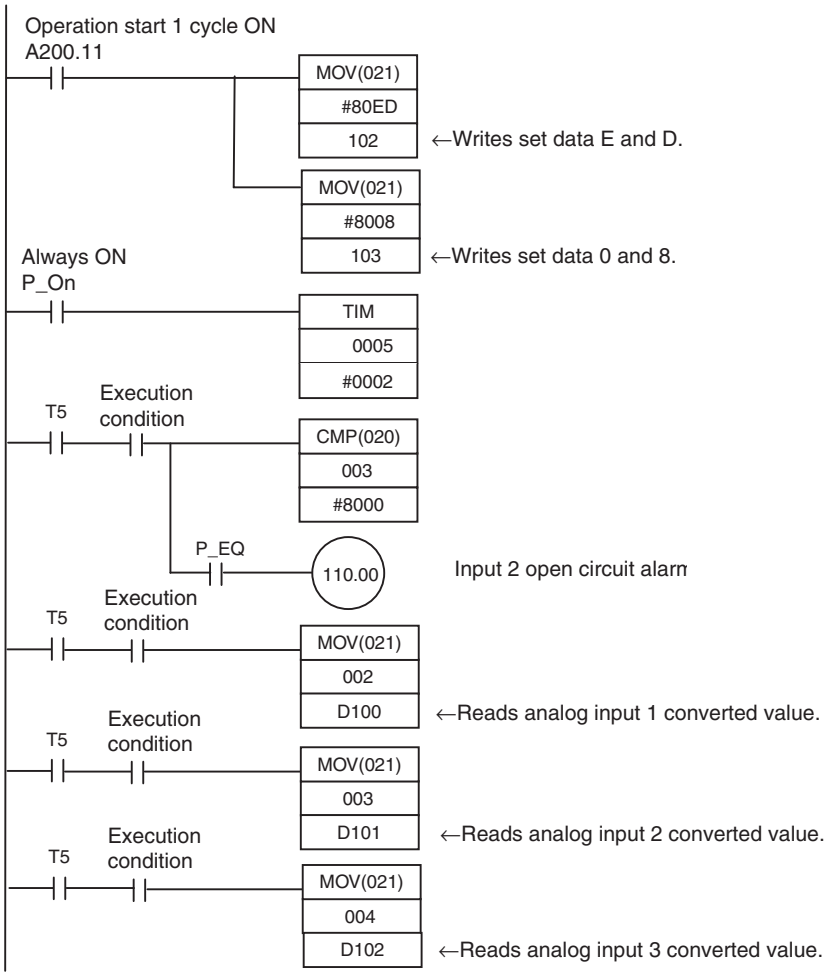

7-3 Analog Output Units

Each CP1W-DA021 Analog Output provides two analog outputs.

Each CP1W-DA041/CPM1A-DA041 Analog Output Unit provides four analog outputs.

- The analog output signal ranges are 1 to 5 V, 0 to 10 V, -10 to +10 V, 0 to 20 mA, and 4 to 20 mA. The resolution is 1/6,000.
- The CP1W-DA021 uses two output words and the CP1W-DA041/CPM1A-DA041 uses four output words, so a maximum of three Units can be connected.

Part Names

CP1W-DA041/CPM1A-DA041/CP1W-DA021

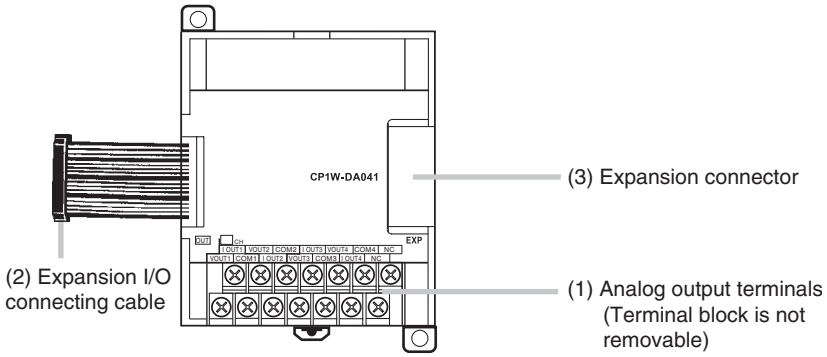

1. Analog Output Terminals
   Connected to analog input devices.

■ Output Terminal Arrangement for CP1W-DA041/CPM1A-DA041

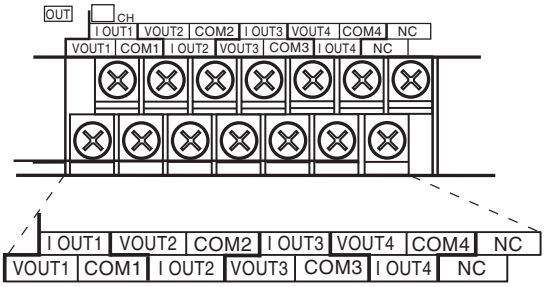

V OUT1	Voltage output 1
I OUT1	Current output 1
COM1	Output common 1
V OUT2	Voltage output 2
I OUT2	Current output 2
COM2	Output common 2
V OUT3	Voltage output 3
I OUT3	Current output 3
COM3	Output common 3
V OUT4	Voltage output 4
I OUT4	Current output 4
COM4	Output common 4

■ Output Terminal Arrangement for CP1W-DA021

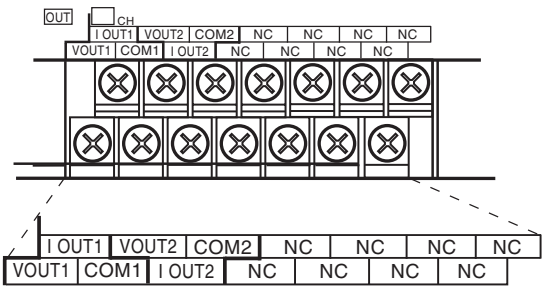

V OUT1	Voltage output 1
I OUT1	Current output 1
COM1	Output common 1
V OUT2	Voltage output 2
I OUT2	Current output 2
COM2	Output common 2

2. Expansion I/O Connecting Cable
   Connected to the CPU Unit or previous Expansion Unit. The cable is provided with the Unit and cannot be removed.

Note Do not touch the cables during operation. Static electricity may cause operating errors.

3. Expansion Connector
   Connected to the next Expansion Unit or Expansion I/O Unit.

Main Analog Output Unit Specifications

Analog Output Units are connected to a CP1L CPU Unit. For CP1L M-type CPU Units, a maximum of three Units can be connected, including other Expansion Units and Expansion I/O Units. For CP1L L-type CPU Units, a maximum of one Unit can be connected.

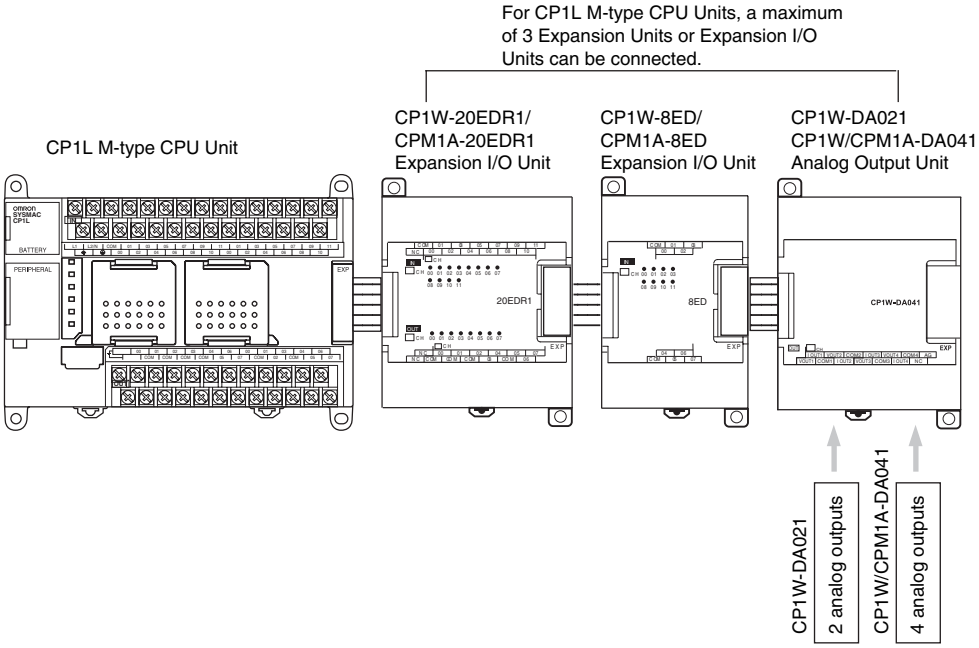

Item			Voltage Output	Current Output
Analog output section	Number of outputs		CP1W-DA021: 2 outputs (2 words allocated) CP1W/CPM1A-DA041: 4 outputs (4 words allocated)	
	Output signal range		1 to 5 VDC, 0 to 10 VDC, or –10 to 10 VDC	0 to 20 mA or 4 to 20 mA
	External output allowable load resistance		2 kΩ min.	350 Ω max.
	External output impedance		0.5 Ω max.	---
	Resolution		1/6000 (full scale)	
	Overall accuracy	25°C	0.4% full scale	
		0 to 55°C	0.8% full scale	
	D/A conversion data		16-bit binary (4-digit hexadecimal) Full scale for –10 to 10 V: F448 to 0BB8 Hex Full scale for other ranges: 0000 to 1770 Hex	
Conversion time			CP1W-DA021: 2 ms/point (4 ms/all points) CP1W/CPM1A-DA041: 2 ms/point (8 ms/all points)	
Isolation method			Photocoupler isolation between analog I/O terminals and internal circuits. No isolation between analog I/O signals.	
Current consumption			CP1W-DA021: 5 VDC 40 mA max.; 24 VDC 95 mA max. CP1W/CPM1A-DA041: 5 VDC 80 mA max.; 24 VDC 124 mA max.	

Analog Output Signal Ranges

The analog values depend on the output signal ranges, as shown in the following diagrams.

Note When the output exceeds the specified range, the output signal will be fixed at either the lower limit or upper limit.

Analog Output Signal Ranges

■ **–10 to 10 V**

The hexadecimal values F448 to 0BB8 (–3000 to 3000) correspond to an analog voltage range of –10 to 10 V. The entire output range is –11 to 11 V. Specify a negative voltage as a two's complement.

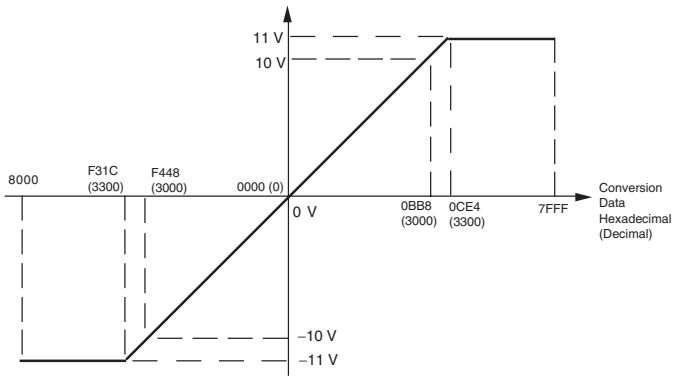

■ **0 to 10 V**

The hexadecimal values 0000 to 1770 (0 to 6000) correspond to an analog voltage range of 0 to 10 V. The entire output range is –0.5 to 10.5 V. Specify a negative voltage as a two's complement.

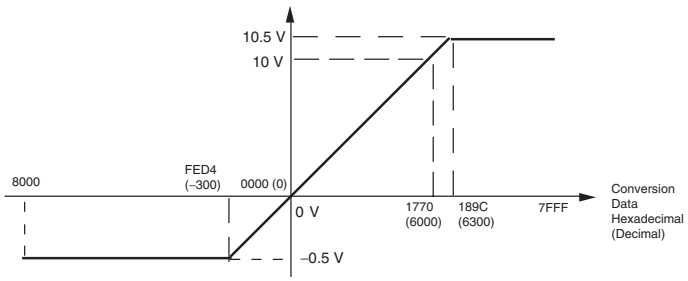

■ **1 to 5 V**

The hexadecimal values 0000 to 1770 (0 to 6000) correspond to an analog voltage range of 1 to 5 V. The entire output range is 0.8 to 5.2 V.

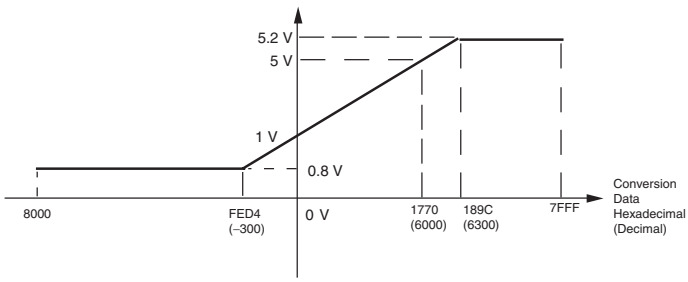

■ **0 to 20 mA**

The hexadecimal values 0000 to 1770 (0 to 6000) correspond to an analog current range of 0 to 20 mA. The entire output range is 0 to 21 mA.

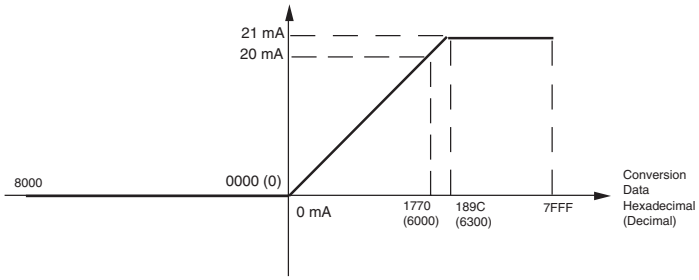

■ **4 to 20 mA**

The hexadecimal values 0000 to 1770 (0 to 6000) correspond to an analog current range of 4 to 20 mA. The entire output range is 3.2 to 20.8 mA.

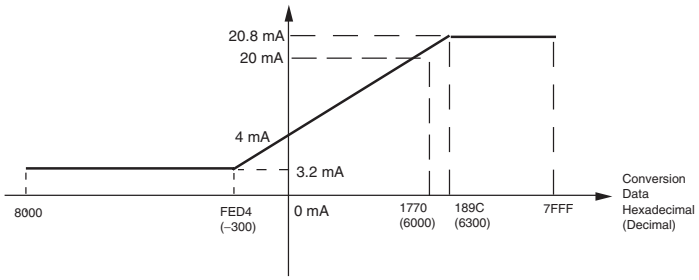

Procedure

Connect and wire Units.

- Connect Analog Output Units.
- Wire to analog input devices.

↓

Create a ladder program

- Write range code to output words.
  CP1W-DA041/CPM1A-DA041: Words n+1, n+2
  CP1W-DA021: Word n+1
  - Set use of outputs.
  - Select output signals using range codes.
- Write D/A conversion values to output words.
  CP1W-DA041/CPM1A-DA041: words n+1 to n+4
  CP1W-DA021: Words n+1, n+2

Writing D/A Conversion Data

■ **CP1W-DA041/CPM1A-DA041**

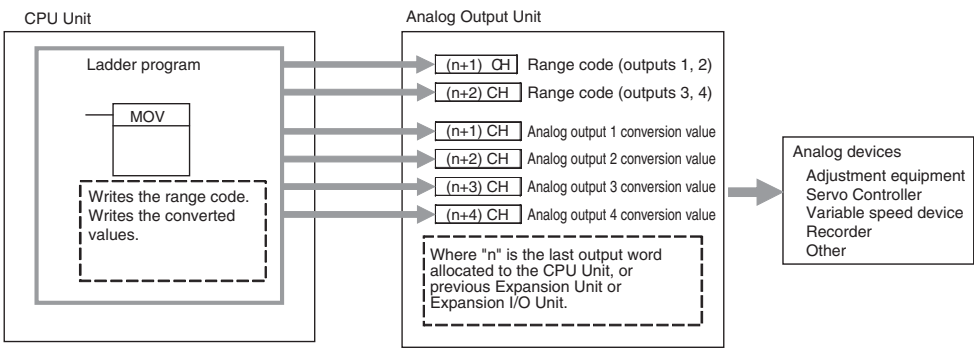

■ **CP1W-DA021**

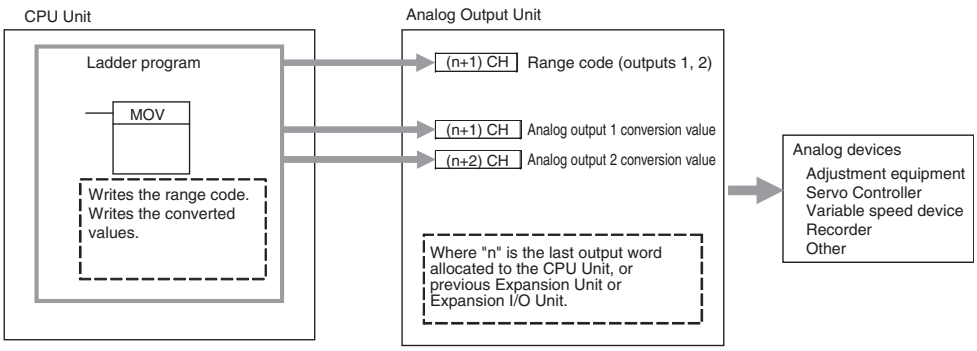

1. Connecting the Analog Output Unit

Connect the Analog Output Unit to the CPU Unit.

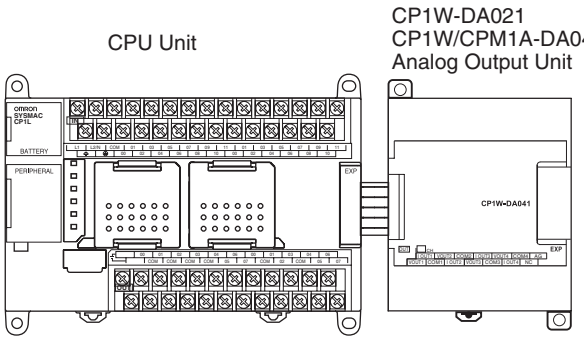

2. Wiring Analog Outputs

Internal Circuits

The following diagram shows the internal circuit using CP1W-DA041/CPM1A-DA041 as an example, which wires analog outputs 1 to 4. In the case of CP1W-DA021, analog outputs 1 and 2 can be used.

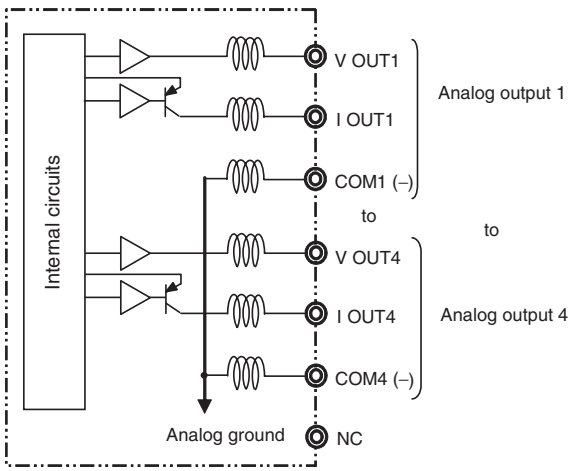

■ **Wiring for Analog Outputs**

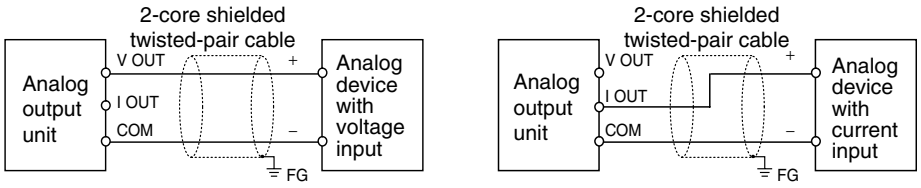

Note

(1) Connect the shield to the FG terminal to prevent noise.

(2) Separate wiring from power lines (AC power supply lines, high-voltage lines, etc.)

(3) When there is noise in the power supply line, install a noise filter on the input section and the power supply.

(4) When external power is supplied (when range codes are set), or when the power is interrupted, there may be a pulse status analog output of up to 1 ms. If this status is a problem, take the following measures.

- Turn ON the power to the CP1L CPU Unit, check the operation status, and then turn ON the power at the load.
- Turn OFF the power to the load and then turn OFF the power to the CP1L CPU Unit.

3. Ladder Program

Allocation of Output Words

Four output words (n+1 to n+4) are allocated, beginning from the first word following the last I/O word allocated to the CPU Unit or already-connected Expansion I/O Unit or Expansion Unit. For CP1W-DA021, two output words (n+1, n+2) are allocated.

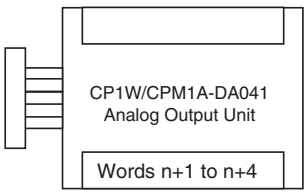

Writing the Range Code

Write the output use and the range code to words n+1 and n+2. For CP1W-DA021, only word n+1 can be used. The D/A conversion will start when the set data is transferred from the CPU Unit to the Analog Output Unit.

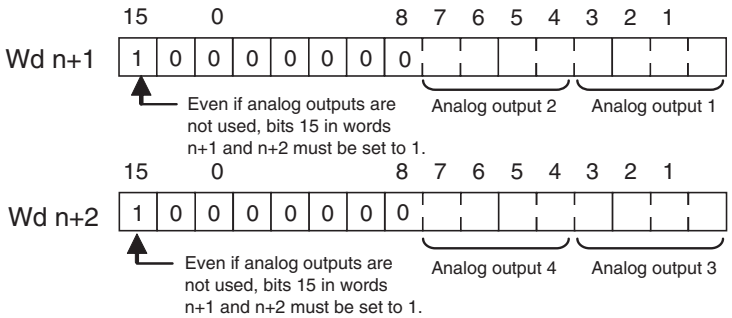

■ **Range Code**

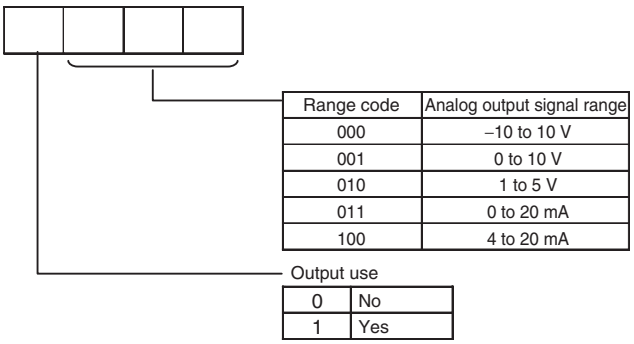

- The Analog Output Unit will not start converting analog I/O values until the range code has been written. The output will be 0 V or 0 mA.
- From when the range code has been written until data in the analog output convertible range is written, 0 V or 0 mA will be output in the 0 to 10 V, -10 to +10 V, and 0 to 20 mA ranges, and 1 V or 4 mA will be output in the 1 to 5 V and 4 to 20 mA ranges.
- Once the range code has been set, it is not possible to change the setting while power is being supplied to the CPU Unit. To change the I/O range, turn the CPU Unit OFF then ON again.

Writing Analog Output Set Values

The ladder program can be used to write data to the output word where the set value is stored. The output word will be “n+1” when “n” is the last output word allocated to the CPU Unit, or previous Expansion Unit or Expansion I/O Unit.

Startup Operation

After power is turned ON, it will require two cycle times plus approximately 50 ms before the first data is converted.

The following table shows the output status after the initial processing is completed.

Output type	Voltage output		Current output	
Output range	0 to 10 V, -10 to +10 V	1 to 5 V	0 to 20 mA	4 to 20 mA
Before range code is written	0 V		0 mA	
After range code is written	0 V	1 V	0 mA	4 mA

Therefore, create a program as shown below, so that when operation begins simultaneously with startup it will wait for valid set data.

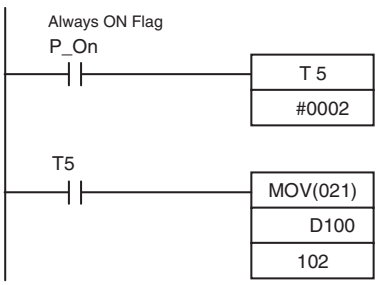

TIM 005 will start as soon as power turns ON. After 0.1 to 0.2 s (100 to 200 ms), the Completion Flag for TIM 005 will turn ON, and the data stored in DM 0100 will be moved to IR 102 as the conversion data for analog output 1.

Handling Unit Errors

- When an error occurs at the Analog Output Unit, the analog output will be 0 V or 0 mA. If a CPU Unit fatal error occurs when analog outputs are set in the 1 to 5 V or 4 to 20 mA range, 0 V or 0 mA will be output for a CPU error I/O bus error, and 1 V or 1 mA will be output for all other errors.
- Expansion Unit errors are output to bits 0 to 6 of word A436. The bits are allocated from A436.00 in order starting with the Unit nearest the CPU Unit. Use these flags in the program when it is necessary to detect errors.

Program Example

■ **CP1W-DA041/CPM1A-DA041**

Analog output	Output range	Range code	Set data	Destination word
Output 1	0 to 10 V	001	1001 (9 hex)	Wd n+1
Output 2	4 to 20 mA	100	1100 (C hex)	Wd n+1
Output 3	-10 to 10 V	000	1000 (8 hex)	Wd n+2
Output 4	Not used.	-(000)	0000 (0 hex)	Wd n+2

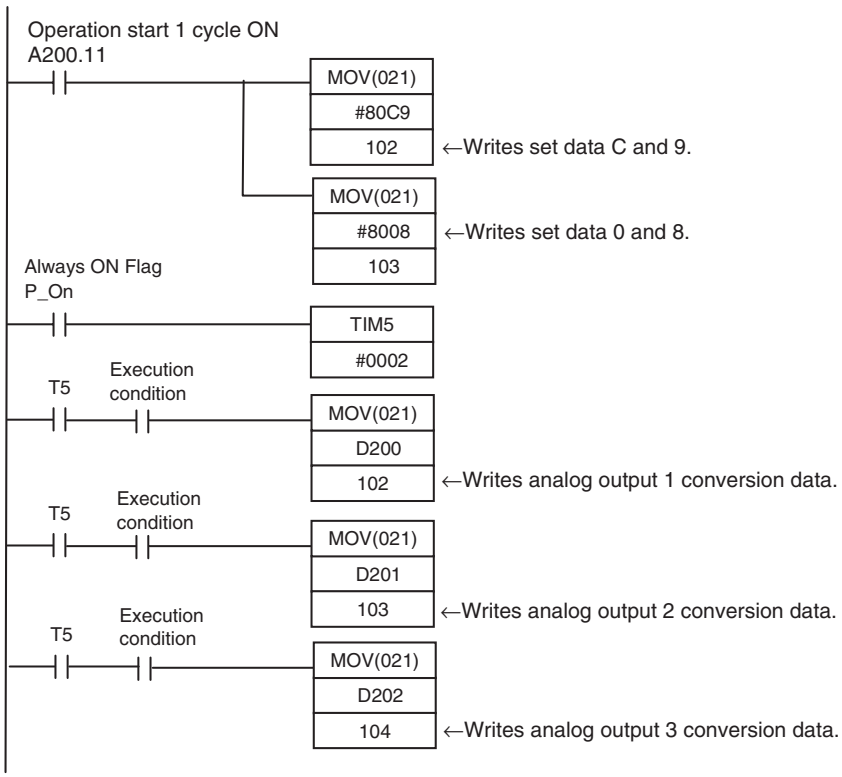

7-4 Analog I/O Units

7-4-1 CPM1A-MAD01 Analog I/O Units

Each CPM1A-MAD01 Analog I/O Unit provides 2 analog inputs and 1 analog output.

- The analog input range can be set to 0 to 10 VDC, 1 to 5 VDC, or 4 to 20 mA with a resolution of 1/256.
  An open-circuit detection function can be used with the 1 to 5 VDC and 4 to 20 mA settings.

- The analog output range can be set to 0 to 10 VDC, −10 to 10 VDC, or 4 to 20 mA. The output has a resolution of 1/256 when the range is set to 0 to 10 VDC or 4 to 20 mA, or a resolution of 1/512 when set to −10 to 10 VDC.

Part Names

CPM1A-MAD01

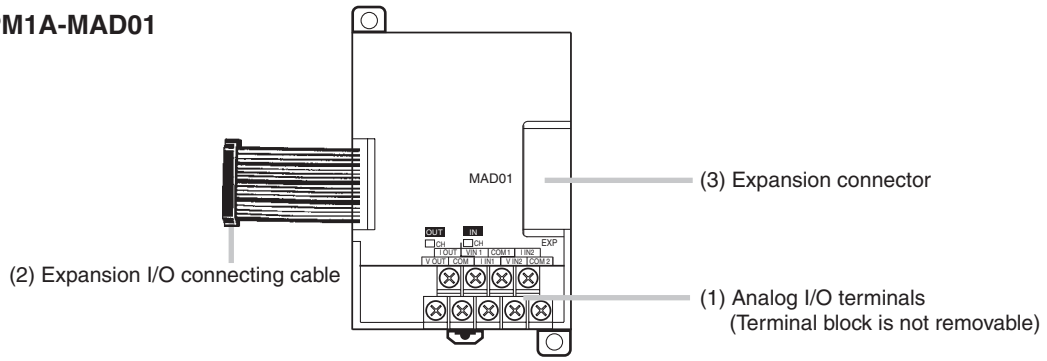

(1) Analog I/O Terminals
Connected to analog I/O devices.

I/O Terminal Arrangement

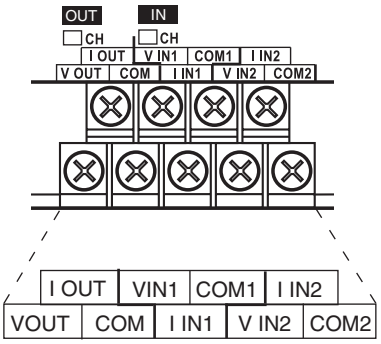

Note When using current inputs, short terminal V IN1 with I IN1 and terminal V IN2 with I IN2.

V OUT	Voltage output
I OUT	Current output
COM	Output common
V IN1	Voltage input 1
I IN1	Current input 1
COM1	Input common 1
V IN2	Voltage input 2
I IN2	Current input 2
COM2	Input common 2

(2) Expansion I/O Connecting Cable
Connected to the expansion connector of a CP1L CPU Unit or an Expansion Unit or Expansion I/O Unit. The cable is provided with the Analog I/O Unit and cannot be removed.

⚠ **Caution** Do not touch the cables during operation. Static electricity may cause operating errors.

(3) Expansion Connector
Used for connecting Expansion Units or Expansion I/O Units.

Main Analog I/O Unit Specifications

Analog I/O Units are connected to the CP1L CPU Unit. For CP1L M-type CPU Units, up to three Units can be connected, including any other Expansion Units and Expansion I/O Units. For CP1L L-type CPU Units, one Unit can be connected.

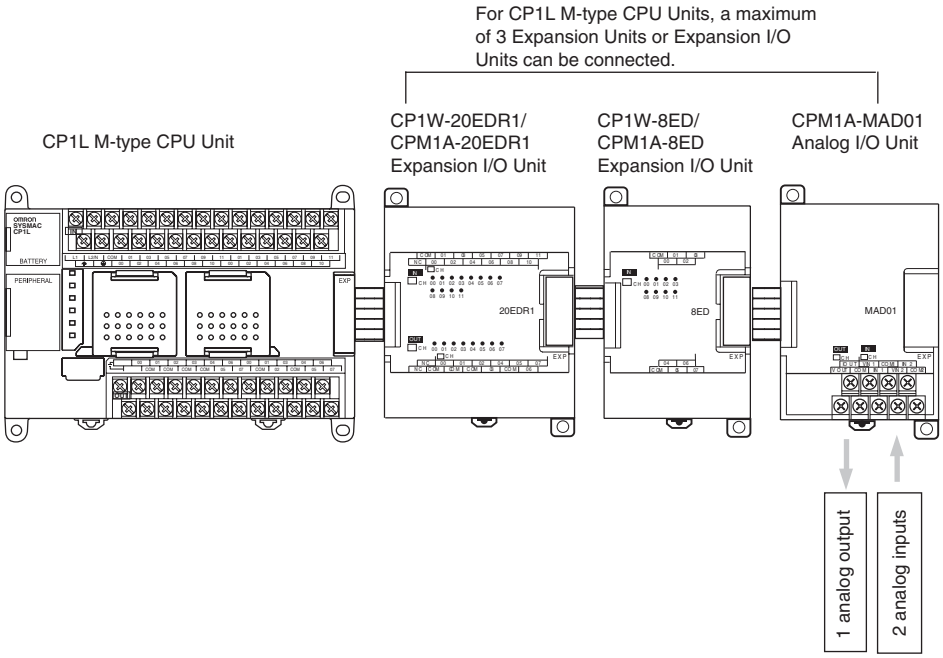

Item		Voltage I/O	Current I/O
Analog Input Section	Number of inputs	2	
	Input signal range	0 to 10 V/1 to 5 V	4 to 20 mA
	Max. rated input	±15 V	±30 mA
	External input impedance	1 MΩ min.	250 Ω rated current
	Resolution	1/256	
	Accuracy	1.0% full scale	
	A/D conversion data	8-bit binary	
Analog Output Section (See note 2.)	Number of outputs	1	
	Output signal range	0 to 10 V or −10 to 10 V	4 to 20 mA
	Max. external output current	5 mA	---
	Allowable external output load resistance	---	350 Ω
	Resolution	1/256 (1/512 when the output signal range is −10 to 10 V)	
	Accuracy	1.0% of full scale	
	Set data	8-bit signed binary	
Conversion time		10 ms max. per Unit (See note 1.)	
Isolation method		Photocoupler isolation between I/O terminals and PC signals. No isolation between analog I/O signals.	
Current consumption		5 VDC: 66 mA max., 24 VDC: 66 mA max.	

Note

(1) The conversion time is the total time for 2 analog inputs and 1 analog output.

(2) With analog outputs it is possible to use both voltage outputs and current outputs at the same time. In this case however, the total output current must not exceed 21 mA.

Analog I/O Signal Ranges

Analog Input Signal Ranges

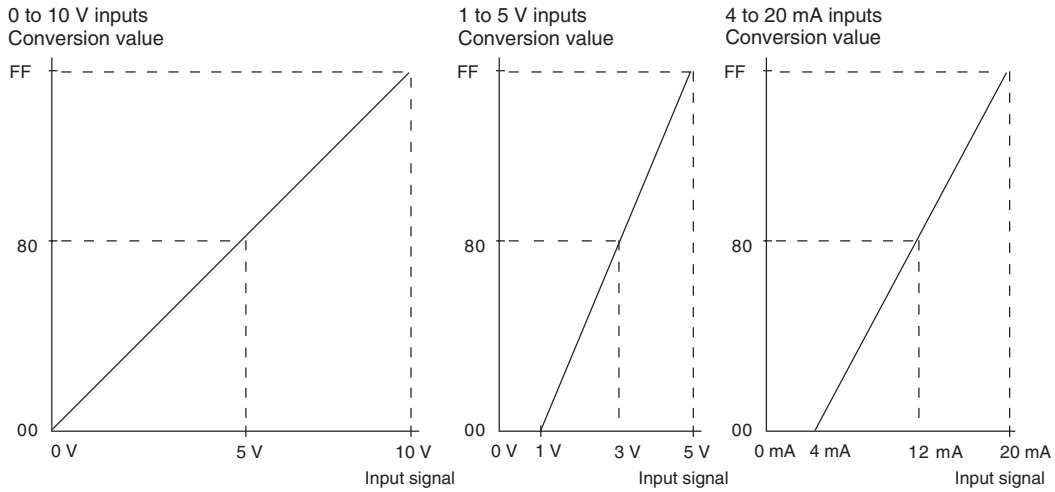

Analog Output Signal Ranges

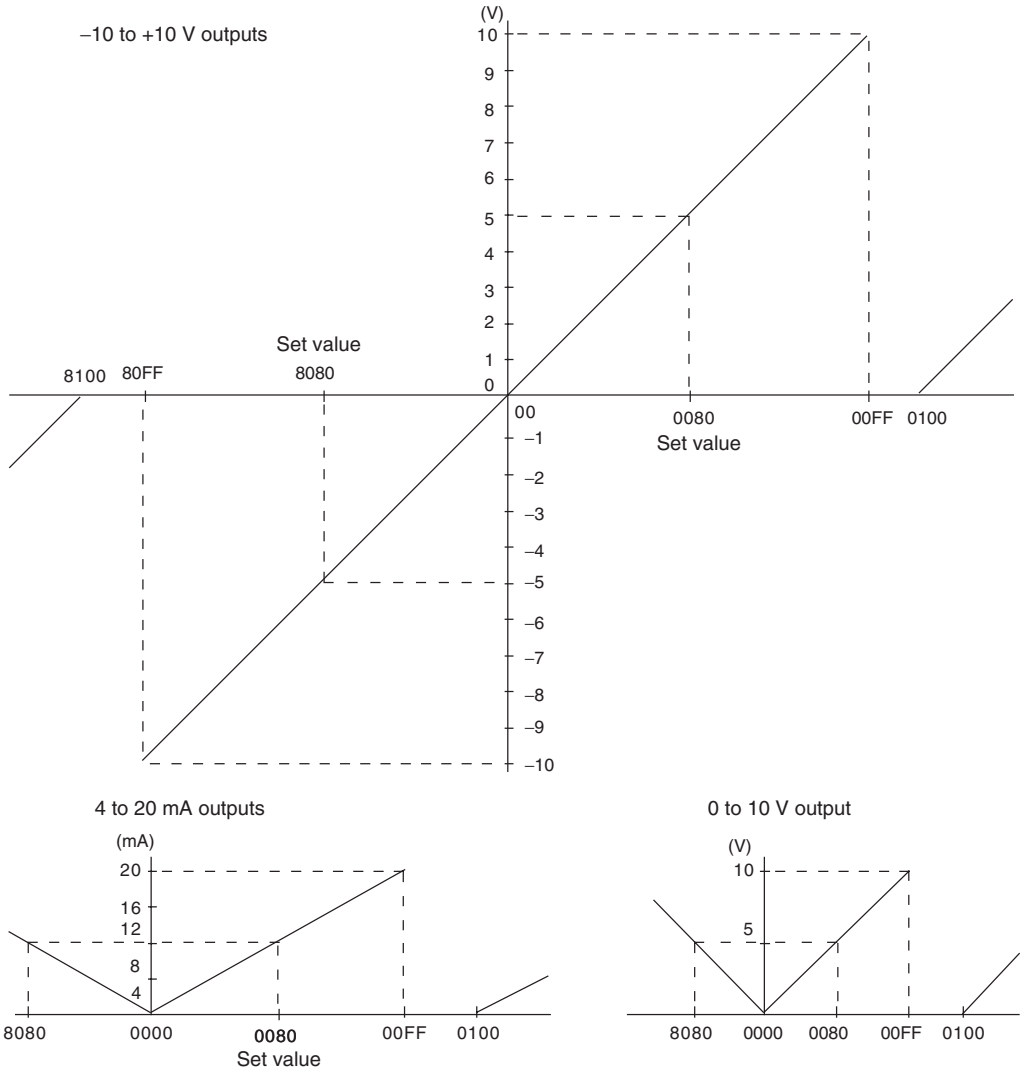

Using Analog I/O

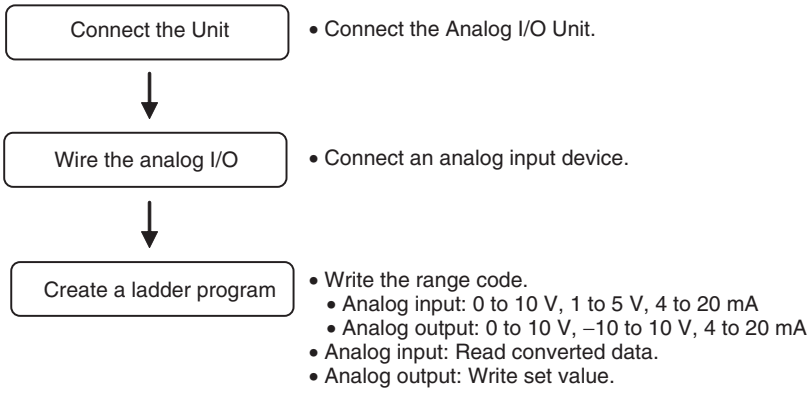

Connecting the Analog I/O Unit

Connect the Analog I/O Unit to the CPU Unit.

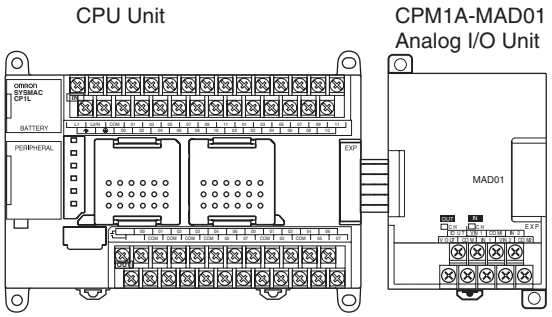

Wiring Analog I/O Devices

Analog Input Wiring

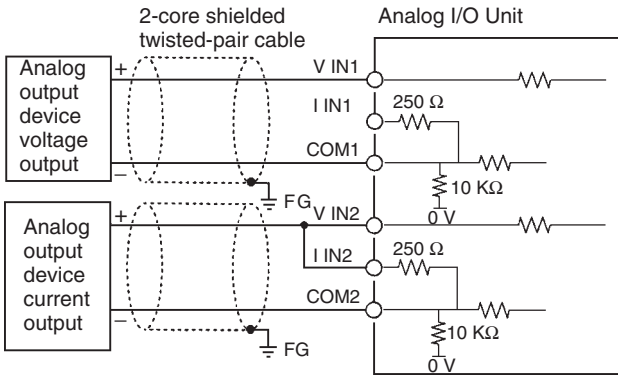

Analog I/O Wiring Example

Using analog input 1 as a voltage input

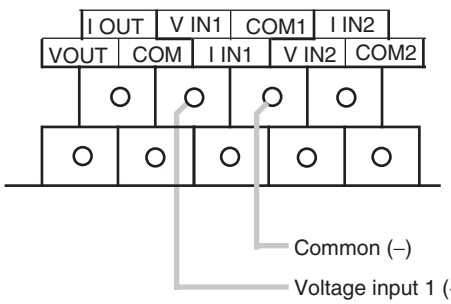

Using analog input 2 as a current input

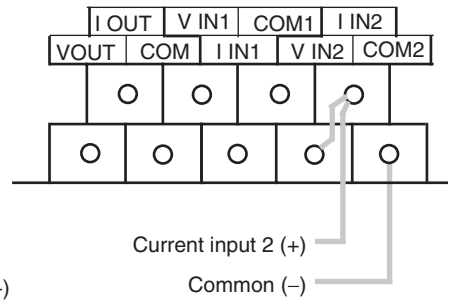

Analog Output Wiring

Voltage Outputs

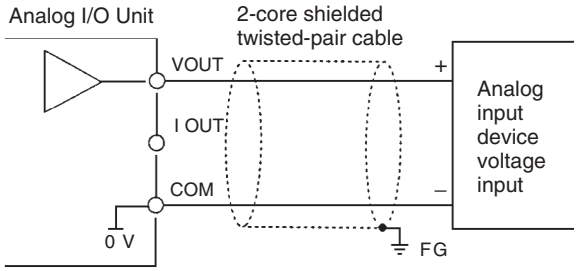

Current Outputs

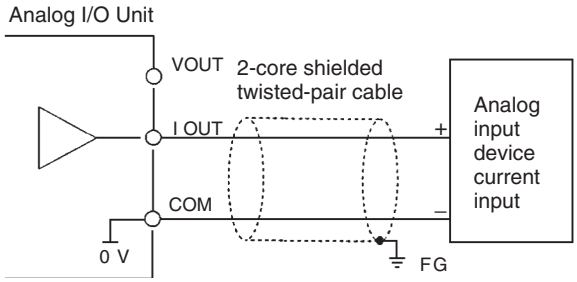

Analog I/O Wiring Example

Using analog output as a voltage output

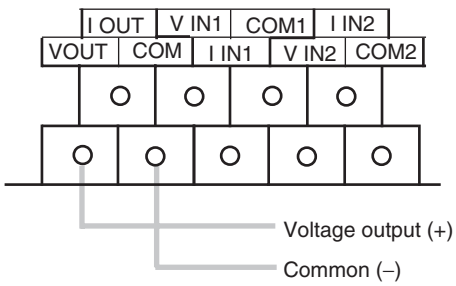

Note

(1) For analog outputs it is possible to use both voltage outputs and current outputs at the same time, but the total current output must not exceed 21 mA.

(2) Use 2-core shielded twisted-pair cables.

(3) Wire away from power lines (AC power supply wires, power lines, etc.)

(4) When an input is not being used, short V IN and I IN to the COM terminal.

(5) Use crimp terminals. (Tighten terminals to a torque of 0.5 N·m.)

(6) When using current inputs, short V_{IN} to I_{IN}.

(7) When there is noise in the power supply line, install a noise filter on the input section and the power supply terminals.

Creating a Ladder Program

I/O Allocation

Two input words and one output word are allocated to the Analog I/O Unit, starting from the next word following the last allocated word on the CPU Unit or previous Expansion Unit or Expansion I/O Unit.

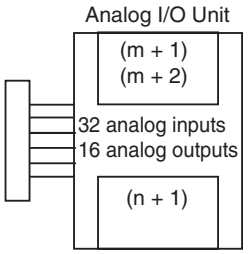

"m" is the last allocated input word and "n" the last allocated output word on the CPU Unit or previous Expansion Unit or Expansion I/O Unit.

Writing the Range Code

Write the range code to word n+1. A/D or D/A conversion begins when the range code is transferred from the CPU Unit to the Analog I/O Unit. There are eight range codes, FF00 to FF07, that combine both the analog input 1 and 2 and analog output signal ranges, as shown below.

Range code	Analog input 1 signal range	Analog input 2 signal range	Analog output signal range
FF00	0 to 10 V	0 to 10 V	0 to 10 V/4 to 20 mA
FF01	0 to 10 V	0 to 10 V	−10 to 10 V/4 to 20 mA
FF02	1 to 5 V/4 to 20 mA	0 to 10 V	0 to 10 V/4 to 20 mA
FF03	1 to 5 V/4 to 20 mA	0 to 10 V	−10 to 10 V/4 to 20 mA
FF04	0 to 10 V	1 to 5 V/4 to 20 mA	0 to 10 V/4 to 20 mA
FF05	0 to 10 V	1 to 5 V/4 to 20 mA	−10 to 10 V/4 to 20 mA
FF06	1 to 5 V/4 to 20 mA	1 to 5 V/4 to 20 mA	0 to 10 V/4 to 20 mA
FF07	1 to 5 V/4 to 20 mA	1 to 5 V/4 to 20 mA	−10 to 10 V/4 to 20 mA

- The voltage/current selection is made by switching the wiring.
- Write the range code to the Analog I/O Unit output word (n + 1) in the first cycle of program execution.

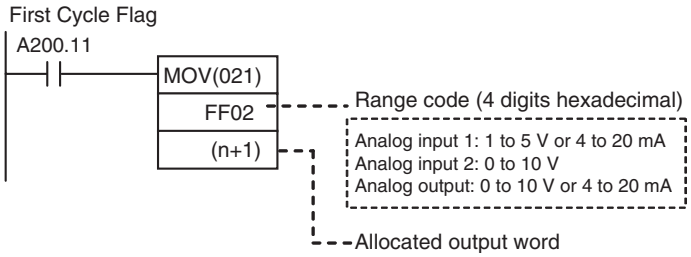

- The Analog I/O Unit will not start converting analog I/O values until the range code has been written.
- Once the range code has been set, it is not possible to change the setting while power is being supplied to the CPU Unit. To change the I/O range, turn the CPU Unit OFF then ON again.
- If a range code other than those specified in the above table is written to n+1, the range code will not be received by the Analog I/O Unit and analog I/O conversion will not start.

Reading A/D Conversion Tables

Data converted from analog to digital is output to bits 00 to 07 in words m+1 and m+2.

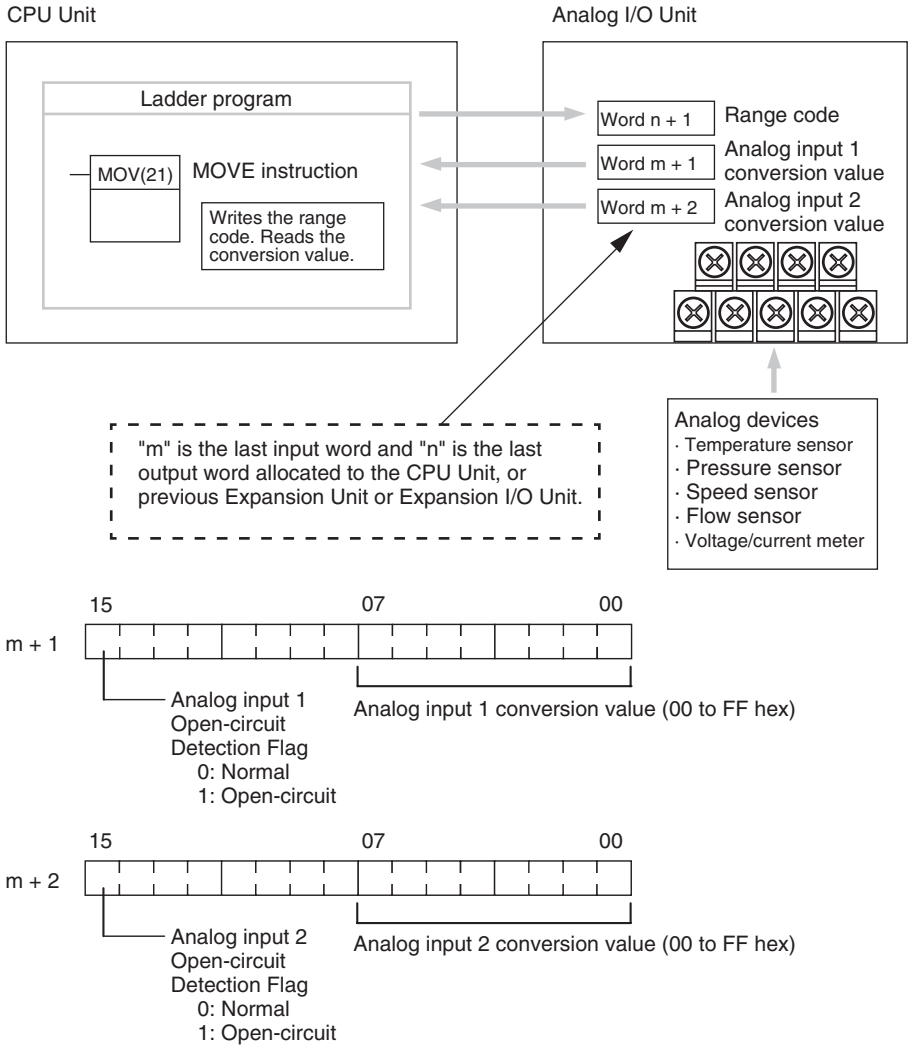

Note The Open-circuit Detection Flag is turned ON if the input signal range is set to 1 to 5 V or 4 to 20 mA and the input signal falls below 1 V or 4 mA. (Open circuits are not detected when the input signal range is set to 0 to 10 V.)

Setting D/A Conversion Data

Output data is written to the Analog I/O Unit's allocated output word, word n+1.

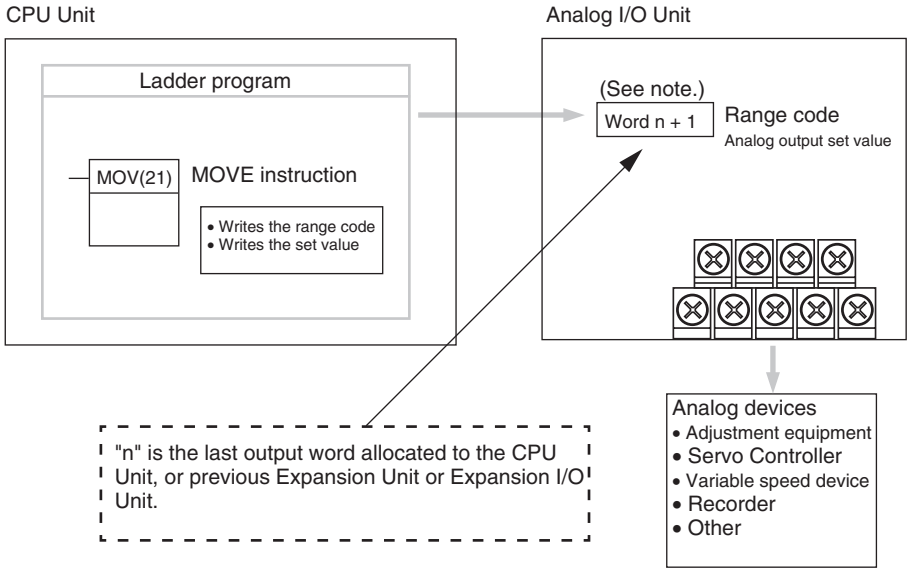

Note Word (n + 1) can be used for either the range code or the analog output set value.

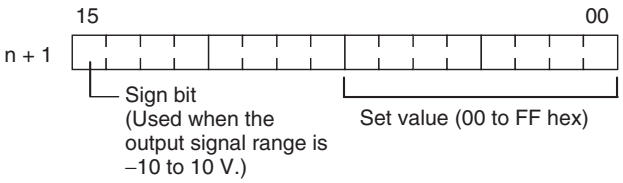

1,2,3...

1. The set value range is 0000 to 00FF hex when the output signal range is 0 to 10 V/4 to 20 mA.
2. The set value range is divided into two parts: 8000 to 80FF hex (−10 to 0 V) and 0000 to 00FF hex (0 to 10 V) when the output signal range is −10 to 10 V.
3. If FF□□ is input, 0 V/4 mA will be output.
4. If an output value is specified, the following bits will be ignored.
   - Output range of −10 to 10 V: Bits 08 to 14
   - Output range of 0 to 10 V/4 to 20 mA: Bits 08 to 15

Startup Operation

After power is turned ON, it will require two cycle times plus approx. 100 ms before the first data is converted. The following instructions can be placed at the beginning of the program to delay reading converted data from analog inputs until conversion is actually possible.

Analog input data will be 0000 until initial processing has been completed. Analog output data will be 0 V or 0 mA until the range code has been written. After the range code has been written, the analog output data will be 0 V or 4 mA if the range is 0 to 10 V, −10 to 10 V, or 4 to 20 mA.

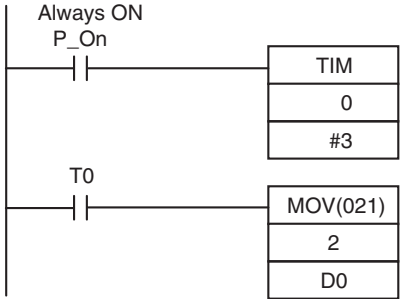

TIM 0 will start as soon as power turns ON. After 0.2 to 0.3 s (200 to 300 ms), the input for TIM 0 will turn ON, and the converted data from analog input 0 that is stored in word 2 will be transferred to D00000.

Handling Unit Errors

- When an error occurs in the Analog I/O Unit, analog input data will be 0000 and 0 V or 4 mA will be output as the analog output.
- Expansion Unit/Expansion I/O Unit errors are output to bits 0 to 6 of word A436. The bits are allocated from A436.00 in order starting with the Unit nearest the CPU Unit. Use these flags in the program when it is necessary to detect errors.

Programming Example

This programming example uses these ranges:
Analog input 0: 0 to 10 V
Analog input 1: 1 to 5 V or 4 to 20 mA
Analog output: 0 to 10 V or 4 to 20 mA

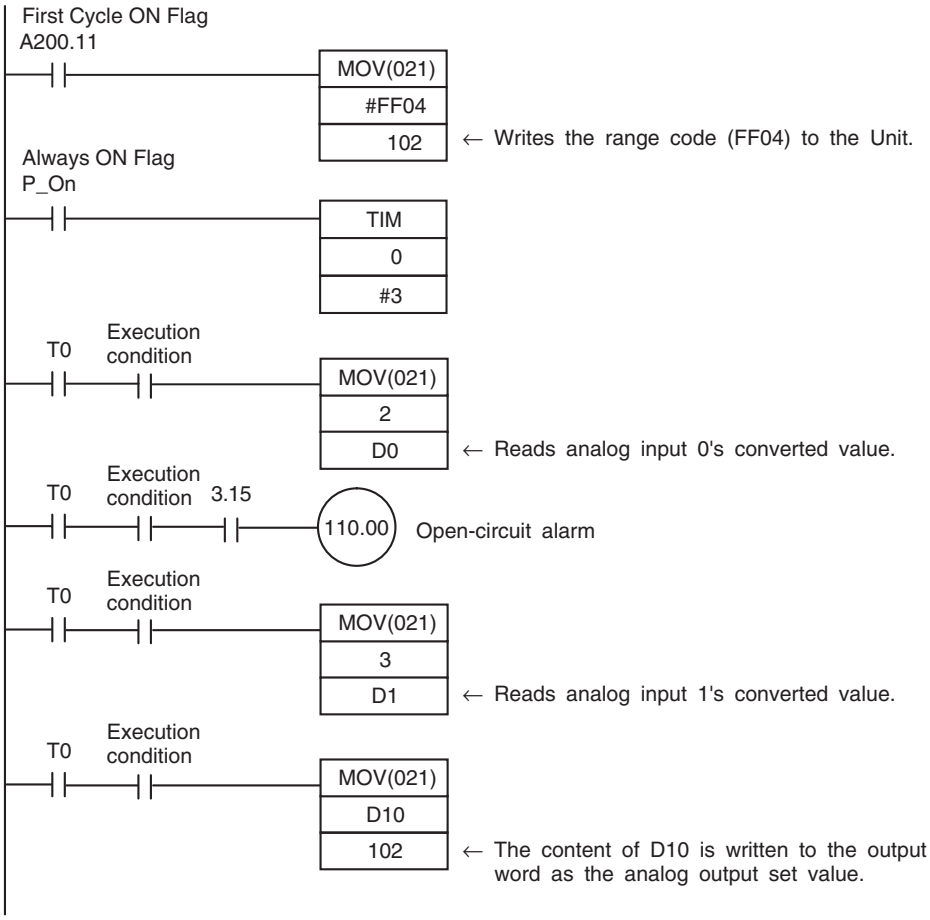

7-4-2 CP1W-MAD11/CPM1A-MAD11 Analog I/O Units

Each CP1W-MAD11/CPM1A-MAD11 Analog I/O Unit provides 2 analog inputs and 1 analog output.

- The analog input range can be set to 0 to 5 VDC, 1 to 5 VDC, 0 to 10 VDC, −10 to 10 VDC, 0 to 20 mA, or 4 to 20 mA. The inputs have a resolution of 1/6000.
  An open-circuit detection function can be used with the 1 to 5 VDC and 4 to 20 mA settings.
- The analog output range can be set to 1 to 5 VDC, 0 to 10 VDC, −10 to 10 VDC, 0 to 20 mA, or 4 to 20 mA. The outputs have a resolution of 1/6000.

Part Names

CP1W-MAD11/CPM1A-MAD11

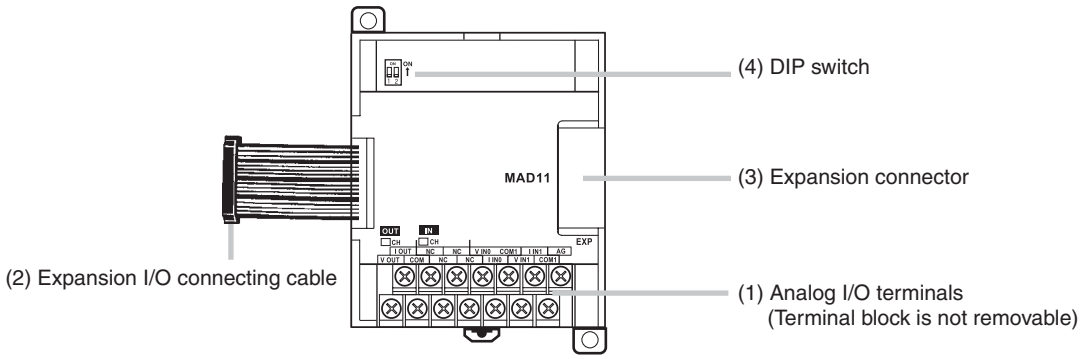

(1) Analog I/O Terminals
Connected to analog I/O devices.

CP1W/CPM1A-MAD11 I/O Terminal Arrangements

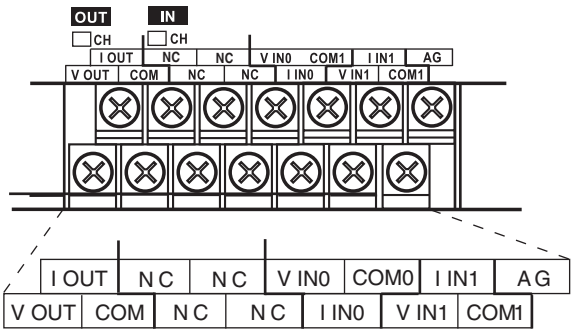

Note For current inputs, short V IN0 to I IN0 and V IN1 to I IN1.

V OUT	Voltage output
I OUT	Current output
COM	Output common
V IN0	Voltage input 0
I IN0	Current input 0
COM0	Input common 0
V IN1	Voltage input 1
I IN1	Current input 1
COM1	Input common 1

(2) Expansion I/O Connecting Cable
Connected to the expansion connector of a CP1L CPU Unit or a CMP1A Expansion Unit or Expansion I/O Unit. The cable is provided with the Analog I/O Unit and cannot be removed.

⚠ **Caution** Do not touch the cables during operation. Static electricity may cause operating errors.

(3) Expansion Connector
Used for connecting Expansion Units or Expansion I/O Units.

(4) DIP Switch
Used to enable or disable averaging.

Pin1: Average processing for analog input 0
(OFF: Average processing not performed; ON: Average processing performed)
Pin2: Average processing for analog input 1
(OFF: Average processing not performed; ON: Average processing performed)

Main Analog I/O Unit Specifications

Analog I/O Units are connected to the CP1L CPU Unit. For CP1L M-type CPU Units, up to three Units can be connected, including any other Expansion Units and Expansion I/O Units. For CP1L L-type CPU Units, one unit can be connected.

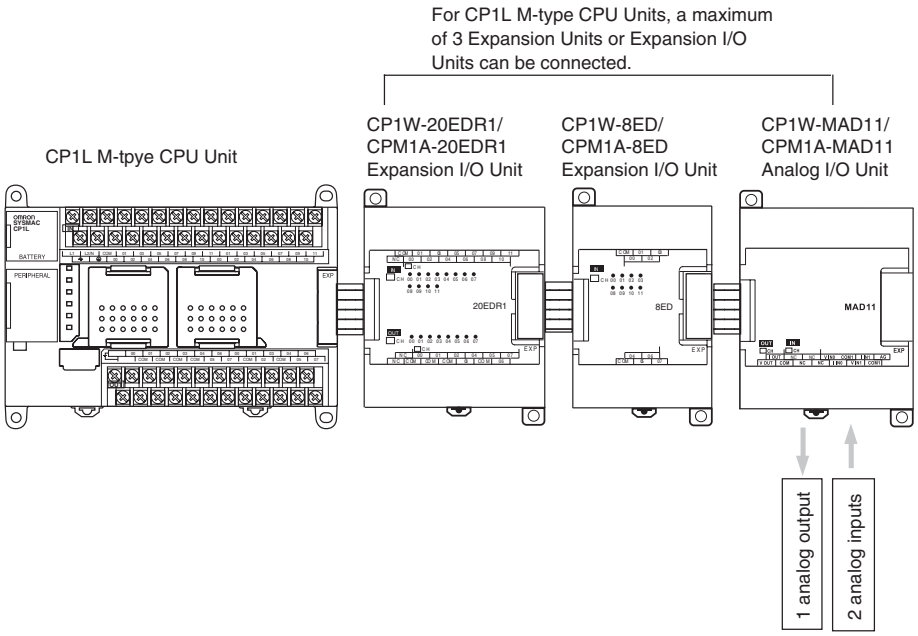

Item			Voltage I/O	Current I/O
Analog Input Section	Number of inputs		2 inputs (2 words allocated)	
	Input signal range		0 to 5 VDC, 1 to 5 VDC, 0 to 10 VDC, or −10 to 10 VDC	0 to 20 mA or 4 to 20 mA
	Max. rated input		±15 V	±30 mA
	External input impedance		1 MΩ min.	Approx. 250 Ω
	Resolution		1/6000 (full scale)	
	Overall accuracy	25°C	0.3% full scale	0.4% full scale
		0 to 55°C	0.6% full scale	0.8% full scale
	A/D conversion data		16-bit binary (4-digit hexadecimal) Full scale for −10 to 10 V: F448 to 0BB8 hex Full scale for other ranges: 0000 to 1770 hex	
	Averaging function		Supported (Settable for individual inputs via DIP switch)	
	Open-circuit detection function		Supported	
Analog Output Section	Number of outputs		1 output (1 word allocated)	
	Output signal range		1 to 5 VDC, 0 to 10 VDC, or −10 to 10 VDC,	0 to 20 mA or 4 to 20 mA
	Allowable external output load resistance		1 kΩ min.	600 Ω max.
	External output impedance		0.5 Ω max.	
	Resolution		1/6000 (full scale)	
	Overall accuracy y	25°C	0.4% full scale	
		0 to 55°C	0.8% full scale	
	Set data (D/A conversion)		16-bit binary (4-digit hexadecimal) Full scale for −10 to 10 V: F448 to 0BB8 hex Full scale for other ranges: 0000 to 1770 hex	
Conversion time			2 ms/point (6 ms/all points)	
Isolation method			Photocoupler isolation between analog I/O terminals and internal circuits. No isolation between analog I/O signals.	
Current consumption			5 VDC: 83 mA max., 24 VDC: 110 mA max.	

Analog I/O Signal Ranges

Analog I/O data is digitally converted according to the analog I/O signal range as shown below.

Note When the input exceeds the specified range, the AD converted data will be fixed at either the lower limit or upper limit.

Analog Input Signal Ranges

−10 to 10 V

The −10- to 10-V range corresponds to the hexadecimal values F448 to 0BB8 (−3000 to 3000). The entire data range is F31C to 0CE4 (−3300 to 3300). A negative voltage is expressed as a two's complement.

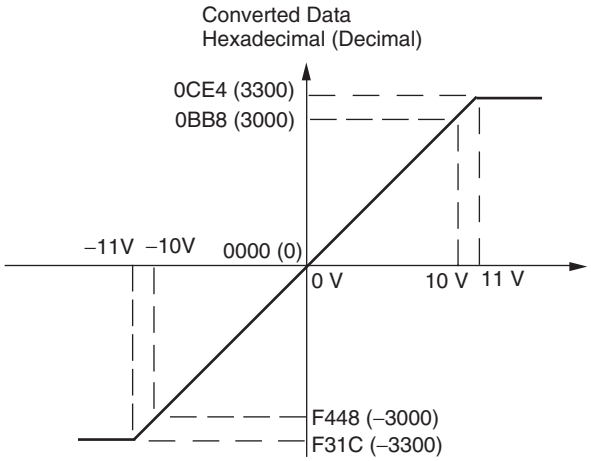

0 to 10 V

The 0- to 10-V range corresponds to the hexadecimal values 0000 to 1770 (0 to 6000). The entire data range is FED4 to 189C (−300 to 6300). A negative voltage is expressed as a two's complement.

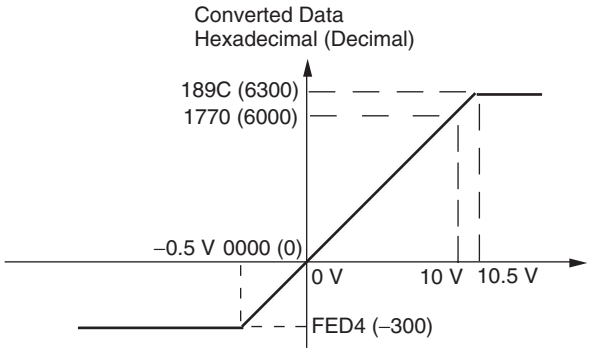

0 to 5 V

The 0- to 5-V range corresponds to the hexadecimal values 0000 to 1770 (0 to 6000). The entire data range is FED4 to 189C (−300 to 6300). A negative voltage is expressed as a two's complement.

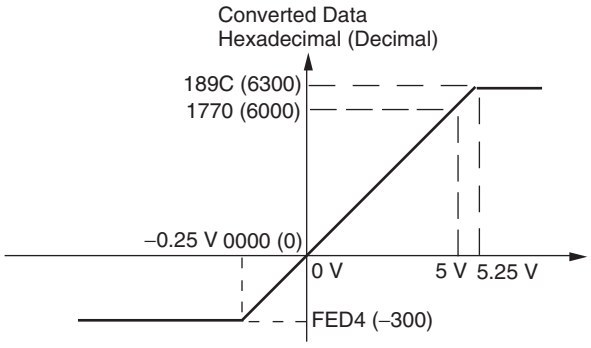

1 to 5 V

The 1- to 5-V range corresponds to the hexadecimal values 0000 to 1770 (0 to 6000). The entire data range is FED4 to 189C (–300 to 6300). Inputs between 0.8 and 1 V are expressed as two's complements. If the input falls below 0.8 V, open-circuit detection will activate and converted data will be 8000.

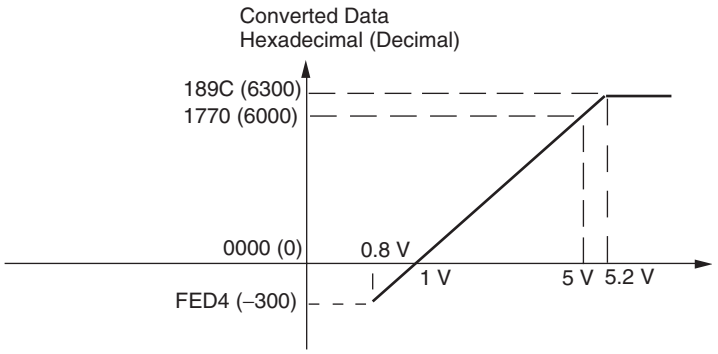

0 to 20 mA

The 0- to 20-mA range corresponds to the hexadecimal values 0000 to 1770 (0 to 6000). The entire data range is FED4 to 189C (–300 to 6300). A negative voltage is expressed as a two's complement.

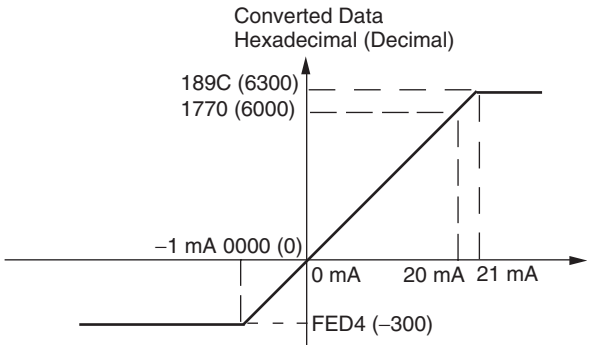

4 to 20 mA

The 4- to 20-mA range corresponds to the hexadecimal values 0000 to 1770 (0 to 6000). The entire data range is FED4 to 189C (–300 to 6300). Inputs between 3.2 and 4 mA are expressed as two's complements. If the input falls below 3.2 mA, open-circuit detection will activate and converted data will be 8000.

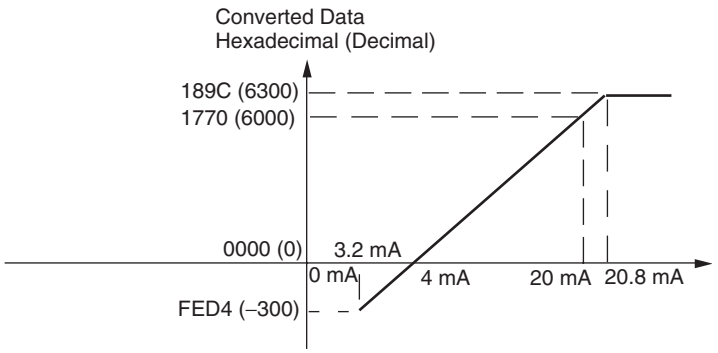

Analog Output Signal Ranges

−10 to 10 V

The hexadecimal values F448 to 0BB8 (−3000 to 3000) correspond to an analog voltage range of −10 to 10 V. The entire output range is −11 to 11 V. Specify a negative voltage as a two's complement.

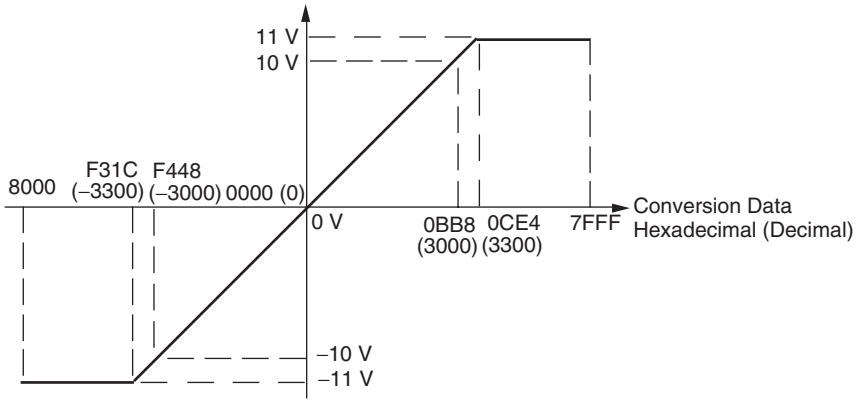

0 to 10 V

The hexadecimal values 0000 to 1770 (0 to 6000) correspond to an analog voltage range of 0 to 10 V. The entire output range is −0.5 to 10.5 V. Specify a negative voltage as a two's complement.

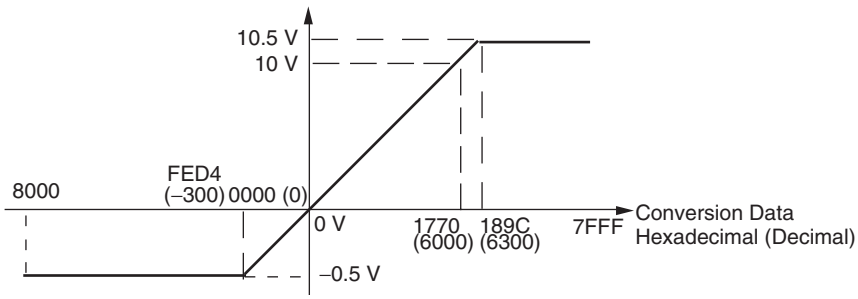

1 to 5 V

The hexadecimal values 0000 to 1770 (0 to 6000) correspond to an analog voltage range of 1 to 5 V. The entire output range is 0.8 to 5.2 V.

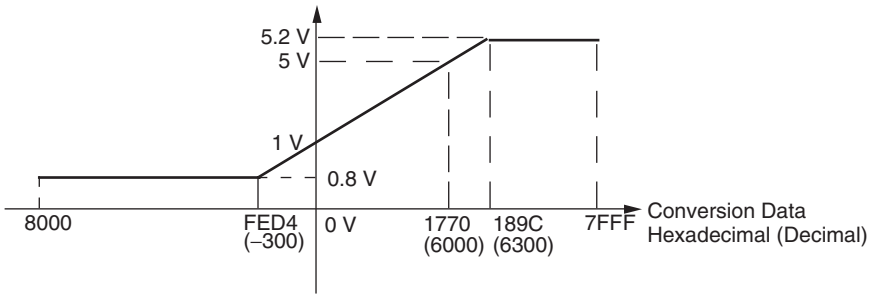

0 to 20 mA

The hexadecimal values 0000 to 1770 (0 to 6000) correspond to an analog current range of 0 to 20 mA. The entire output range is 0 to 21 mA.

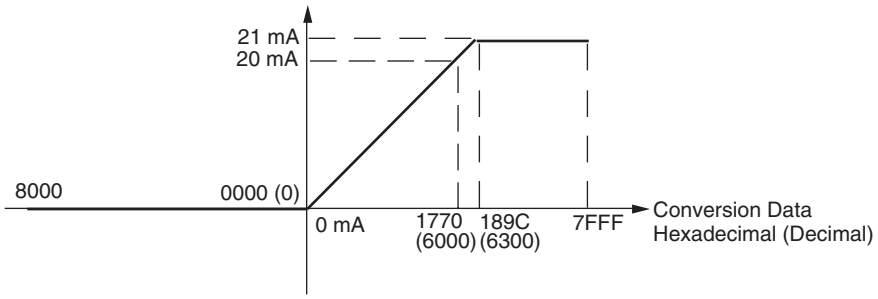

4 to 20 mA

The hexadecimal values 0000 to 1770 (0 to 6000) correspond to an analog current range of 4 to 20 mA. The entire output range is 3.2 to 20.8 mA.

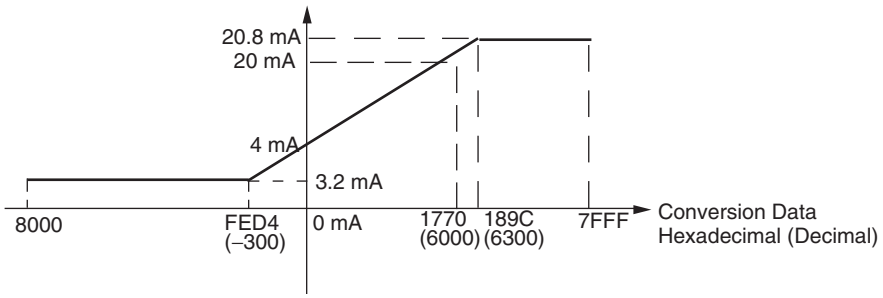

Averaging Function for Analog Inputs

The averaging function can be enabled for inputs using the DIP switch. The averaging function stores the average (a moving average) of the last eight input values as the converted value. Use this function to smooth inputs that vary at a short interval.

Open-circuit Detection Function for Analog Inputs

The open-circuit detection function is activated when the input range is set to 1 to 5 V and the voltage drops below 0.8 V, or when the input range is set to 4 to 20 mA and the current drops below 3.2 mA. When the open-circuit detection function is activated, the converted data will be set to 8,000.

The time for enabling or clearing the open-circuit detection function is the same as the time for converting the data. If the input returns to the convertible range, the open-circuit detection is cleared automatically and the output returns to the normal range.

Using Analog I/O

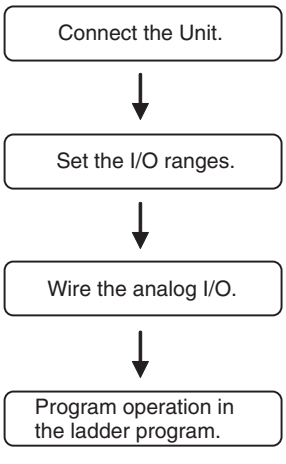

- Connect the Analog I/O Unit.
- Analog inputs: 0 to 5 VDC, 1 to 5 VDC, 0 to 10 VDC, –10 to 10 VDC, 0 to 20 mA, or 4 to 20 mA
- Analog output: 1 to 5 VDC, 0 to 10 VDC, –10 to 10 VDC, 0 to 20 mA, or 4 to 20 mA
- Set analog inputs as voltage or current inputs and set the averaging function.
- Connect analog I/O devices.
- Write the range code.
- Analog inputs: Read converted data.
- Analog output: Write set values.

Reading Range Code Settings and A/D Conversion Data

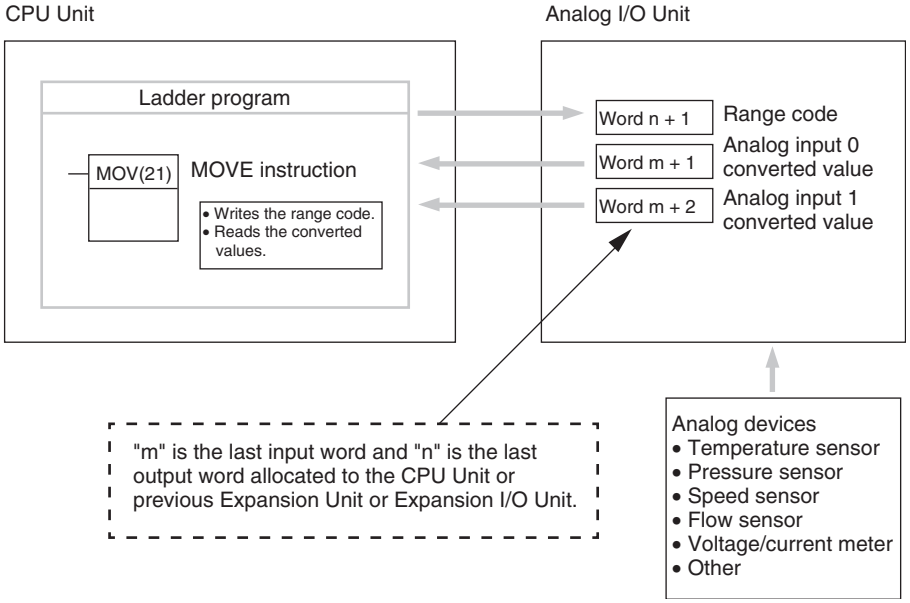

Writing D/A Conversion Data

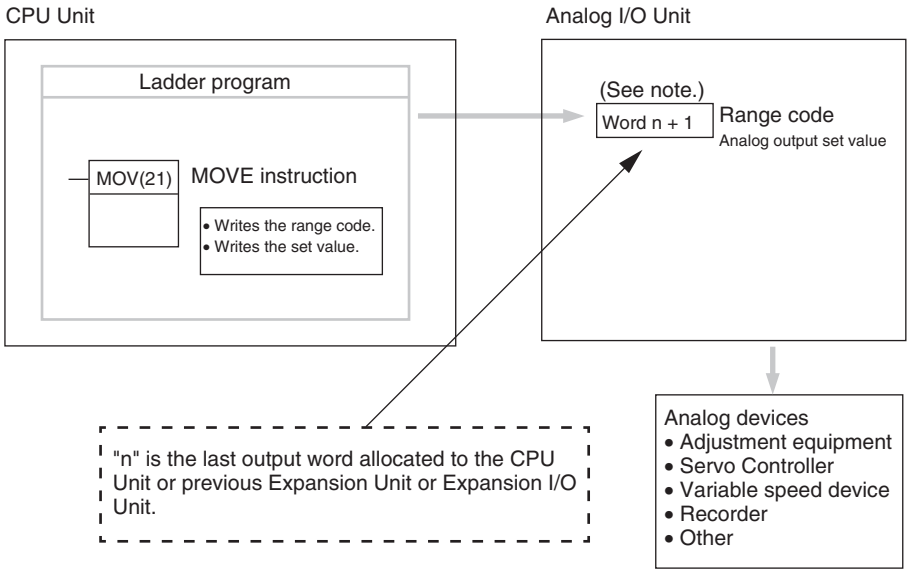

Note Word (n + 1) can be used for either the range code or the analog output set value.

Connecting the Analog I/O Unit and Setting the DIP Switch

This section describes how to connect an Analog I/O Unit to the CPU Unit.

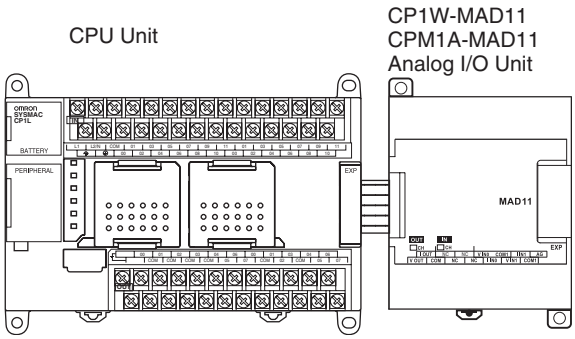

Setting the Averaging Function

DIP switch pins 1-1 and 1-2 are used to set the averaging function. When averaging is enabled, a moving average of the last eight input values is output as the converted value. The averaging function can be set separately for analog inputs 1 and 2.

DIP switch pin	Function	Setting	Default
1-1	Averaging	Analog input 0 OFF: Disabled; ON: Enabled	OFF
1-2		Analog input 1 OFF: Disabled; ON: Enabled	OFF

Wiring Analog I/O Devices

Internal Circuits

Analog Inputs

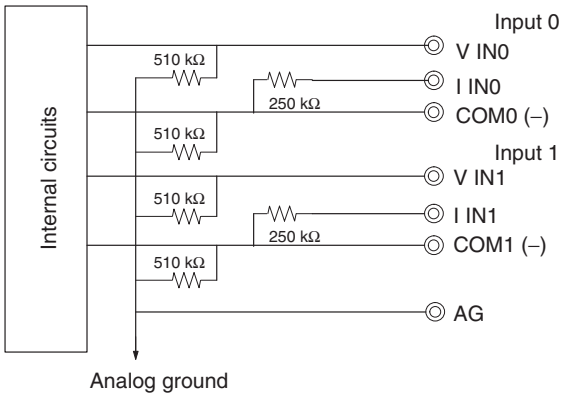

Analog Outputs

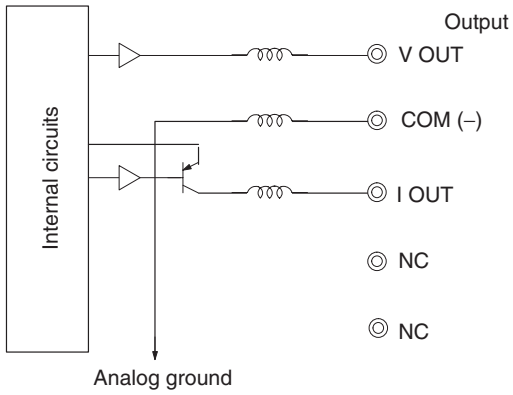

Terminal Arrangements

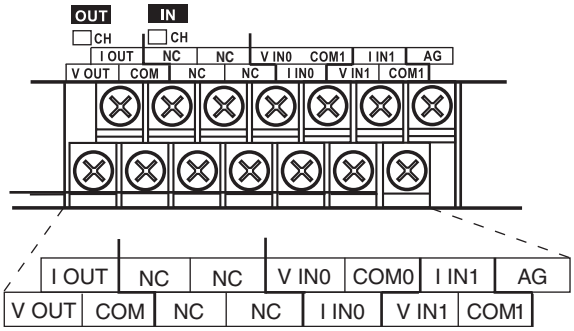

Note For current inputs, short V IN0 to I IN0 and V IN1 to I IN1.

V OUT	Voltage output
I OUT	Current output
COM	Output common
V IN0	Voltage input 0
I IN0	Current input 0
COM0	Input common 0
V IN1	Voltage input 1
I IN1	Current input 1
COM1	Input common 1

Wiring for Analog Inputs

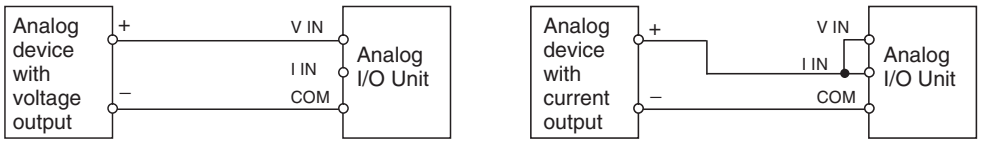

Wiring for Analog Outputs

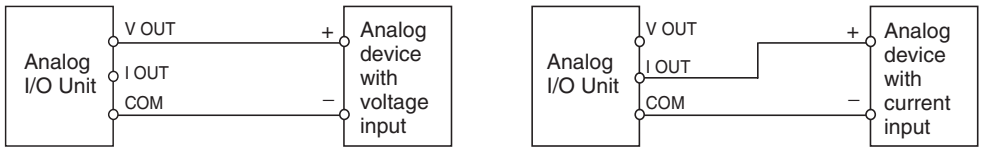

Note

(1) Use shielded twisted-pair cables, but do not connect the shield.

(2) When an input is not being used, short the + and – terminals.

(3) Separate wiring from power lines (AC power supply lines, high-voltage lines, etc.)

(4) When there is noise in the power supply line, install a noise filter on the input section and the power supply terminals.

(5) Refer to the following diagram regarding wiring disconnections when voltage input is being used.

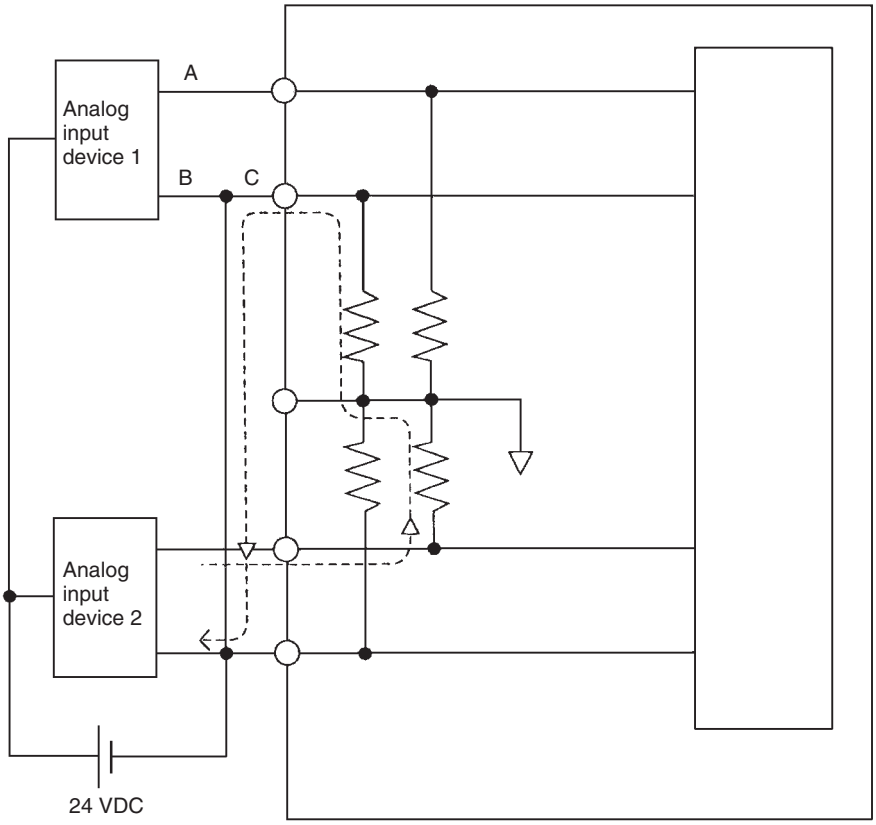

Example: If analog input device 2 is outputting 5 V and the same power supply is being used for both devices as shown above, approximately 1/3, or 1.6 V, will be applied to the input for input device 1.

If a wiring disconnection occurs when voltage input is being used, the situation described below will result. Either separate the power supplies for the connected devices, or use an isolator for each input.

If the same power supply is being used by the connected devices and a disconnection occurs at points A or B in the above diagram, an unwanted circuit path will occur as shown along the dotted line in the diagram. If that occurs, a voltage of approximately 1/3 to 1/2 of the output voltage of the other connected device will be generated. If that voltage is generated while the setting is for 1 to 5 V, open-circuit detection may not be possible. Also, if a disconnection occurs at point C in the diagram, the negative (-) side will be used in for both devices and open-circuit detection will not be possible.

This problem will not occur for current inputs even if the same power supply is used.

Note When external power is supplied (when setting the range code), or when there is a power interruption, pulse-form analog output of up to 1 ms may be generated. If this causes problems with operation, take countermeasures such as those suggested below.

- Turn ON the power supply for the CP1L CPU Unit first, and then turn ON the power supply for the load after confirming correct operation.
- Turn OFF the power supply for the load before turning OFF the power supply for the CP1L CPU Unit.

Creating a Ladder Program

I/O Allocation

Two input words and one output word are allocated to the Analog I/O Unit starting from the next word following the last allocated word on the CPU Unit or previous Expansion Unit or Expansion I/O Unit.

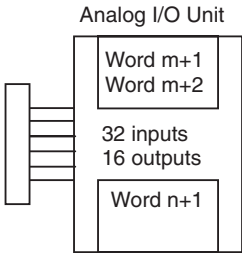

Writing the Range Code

Write the range code to word n+1. A/D or D/A conversion begins when the range code is transferred from the CPU Unit to the Analog I/O Unit. There are five range codes, 000 to 100, that combine the analog input 1 and 2 and analog output signal ranges, as shown below.

Range code	Analog input 0 signal range	Analog input 1 signal range	Analog output signal range
000	−10 to 10 V	−10 to 10 V	−10 to 10 V
001	0 to 10 V	0 to 10 V	0 to 10 V
010	1 to 5 V/4 to 20 mA	1 to 5 V/4 to 20 mA	1 to 5 V
011	0 to 5 V/0 to 20 mA	0 to 5 V/0 to 20 mA	0 to 20 mA
100	---	---	4 to 20 mA

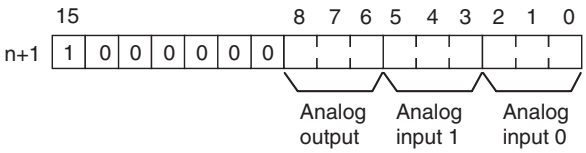

Example

The following instructions set analog input 0 to 4 to 20 mA, analog input 1 to 0 to 10 V, and the analog output to −10 to 10 V.

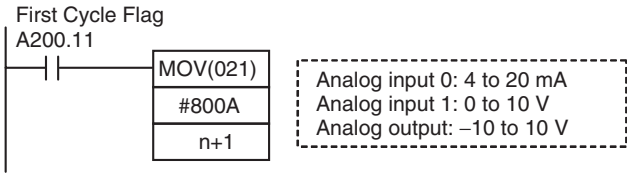

- The Analog I/O Unit will not start converting analog I/O values until the range code has been written. Until conversion starts, inputs will be 0000, and 0 V or 0 mA will be output.
- After the range code has been set, 0 V or 0 mA will be output for the 0 to 10-V, −10 to 10-V, or 0 to 20-mA ranges, and 1 V or 4 mA will be output for the 1 to 5-V and 4 to 20-mA ranges until a convertible value has been written to the output word.
- Once the range code has been set, it is not possible to change the setting while power is being supplied to the CPU Unit. To change the I/O range, turn the CPU Unit OFF then ON again.

Reading Converted Analog Input Values

The ladder program can be used to read the memory area words where the converted values are stored. Values are output to the next two words (m + 1, m + 2) following the last input word (m) allocated to the CPU Unit or previous Expansion Unit or Expansion I/O Unit.

Writing Analog Output Set Values

The ladder program can be used to write data to the memory area where the set value is stored. The output word will be "n+1," where "n" is the last output word allocated to the CPU Unit or previous Expansion Unit or Expansion I/O Unit.

Startup Operation

After power is turned ON, it will require two cycle times plus approx. 50 ms before the first data is converted. The following instructions can be placed at the beginning of the program to delay reading converted data from analog inputs until conversion is actually possible.

Analog input data will be 0000 until initial processing has been completed. Analog output data will be 0 V or 0 mA until the range code has been written. After the range code has been written, the analog output data will be 0 V or 0 mA if the range is 0 to 10 V, −10 to 10 V, or 0 to 20 mA, or it will be 1 V or 4 mA if the range is 1 to 5 V or 4 to 20 mA.

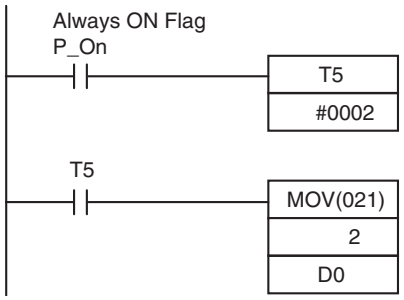

TIM 5 will start as soon as power turns ON. After 0.1 to 0.2 s (100 to 200 ms), the input for TIM 5 will turn ON, and the converted data from analog input 0 that is stored in word 2 will be transferred to D00000.

Handling Unit Errors

- When an error occurs in the Analog I/O Unit, analog input data will be 0000 and 0 V or 0 mA will be output as the analog output.
  If a CPU error or an I/O bus error (fatal errors) occurs at the CPU Unit and the analog output is set to 1 to 5 V or 4 to 20 mA, 0 V or 0 mA will be output. For any other fatal errors at the CPU Unit, 1 V or 4 mA will be output.
- Expansion Unit and Expansion I/O Unit errors are output to bits 0 to 6 of word A436. The bits are allocated from A436.00 in order starting from the Unit nearest the CPU Unit. Use these flags in the program when it is necessary to detect errors.

Programming Example

This programming example uses these ranges:
Analog input 0: 0 to 10 V
Analog input 1: 4 to 20 mA
Analog output: 0 to 10 V

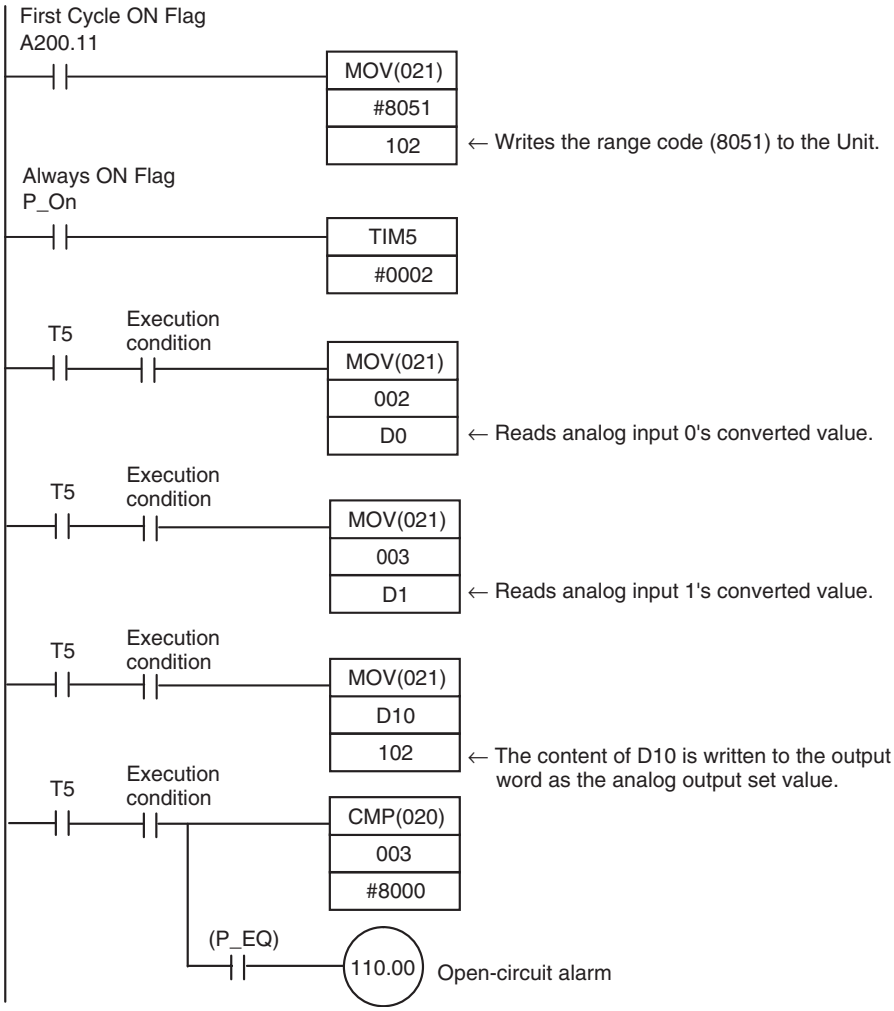

7-5 Temperature Sensor Units

CP1W-TS002/TS102 and CPM1A-TS002/TS102 Temperature Sensor Units each provide up to four input points, and CP1W-TS001/TS001 and CPM1A-TS001/TS101 Temperature Sensor Units each provide up to two input points. The inputs can be from thermocouples or platinum resistance thermometers.

CP1W-TS002/TS102 and CPM1A-TS002/TS102 Temperature Sensor Units are each allocated four input words.

Part Names

Temperature Sensor Units:
CP1W-TS□□□
and CPM1A-TS□□□

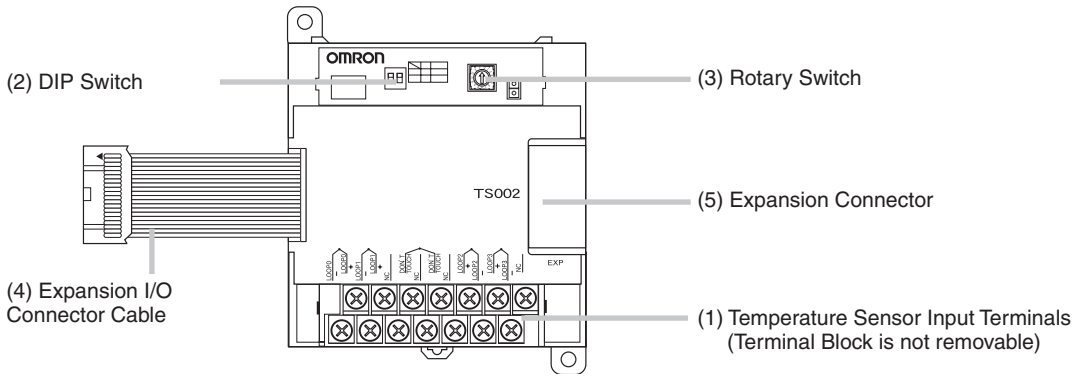

(1) Temperature Sensor Input Terminals
Used to connect temperature sensors such as thermocouples or platinum resistance thermometers.

(2) DIP Switch
Used to set the temperature unit (°C or °F) and the number of decimal places used.

(3) Rotary Switch
Used to set the temperature input range. Make the setting according to the specifications of the temperature sensors that are connected.

(4) Expansion I/O Connecting Cable
Connected to the expansion connector of a CP1L CPU Unit or a Expansion Unit or Expansion I/O Unit. The cable is included with the Temperature Sensor Unit and cannot be removed.

Note Do not touch the cables during operation. Static electricity may cause operating errors.

(5) Expansion Connector
Used for connecting Expansion Units or Expansion I/O Units.

Main Specifications

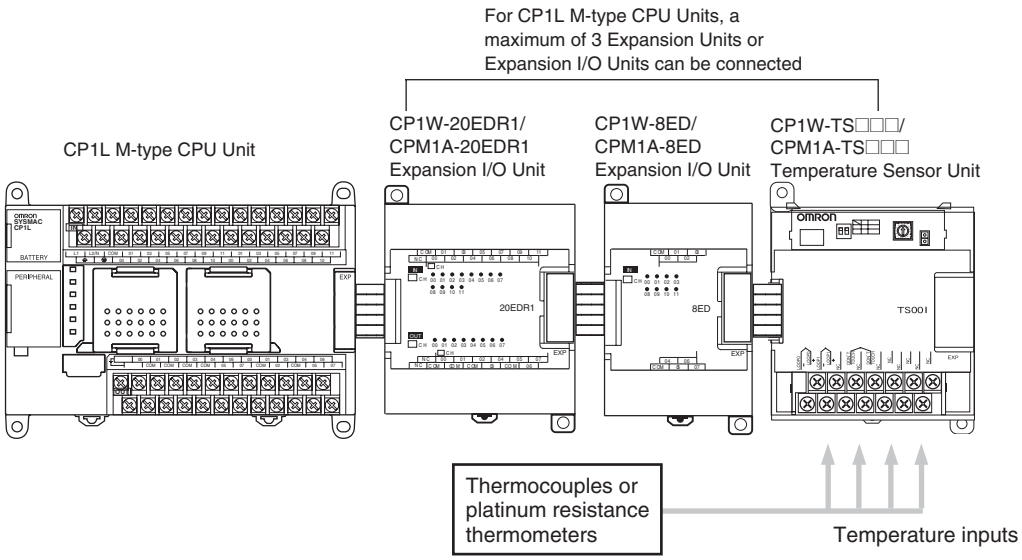

Item	CP1W-TS001 CPM1A-TS001	CP1W-TS002 CPM1A-TS002	CP1W-TS101 CPM1A-TS101	CP1W-TS102 CPM1A-TS102
Temperature sensors	Thermocouples		Platinum resistance thermometer	
	Switchable between K and J, but same type must be used for all inputs.		Switchable between Pt100 and JPt100, but same type must be used for all inputs.	
Number of inputs	2	4	2	4
Allocated input words	2	4	2	4
Accuracy	(The larger of ±0.5% of converted value or ±2°C) ±1 digit max. (See note.)		(The larger of ±0.5% of converted value or ±1°C) ±1 digit max.	
Conversion time	250 ms for 2 or 4 input points			
Converted temperature data	16-bit binary data (4-digit hexadecimal)			
Isolation	Photocouplers between all temperature input signals			
Current consumption	5 VDC: 40 mA max., 24 VDC: 59 mA max.		5 VDC: 54 mA max., 24 VDC: 73 mA max.	

Note Accuracy for a K-type sensor at −100°C or less is ±4°C ±1 digit max.

Using Temperature Sensor Units

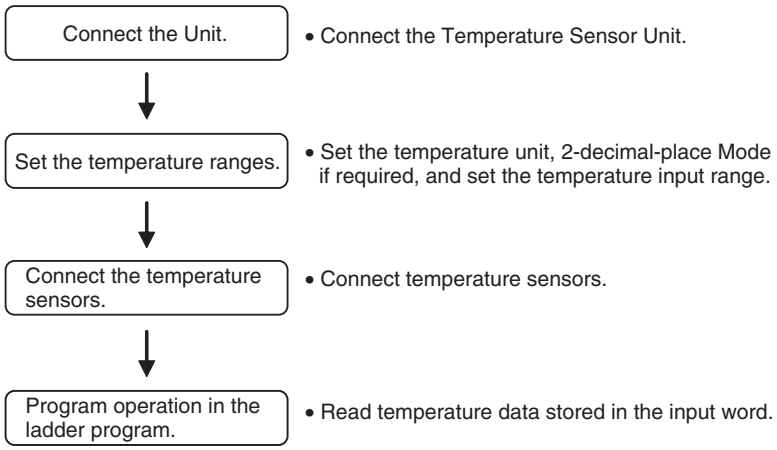

Connecting Temperature Sensor Units

For CP1L M-type CPU Units, a maximum of three CPM1A-TS002 and CPM1A-TS102 Temperature Sensor Units can be connected, because each is allocated four words. For CP1L L-type CPU Units, one Unit can be connected.

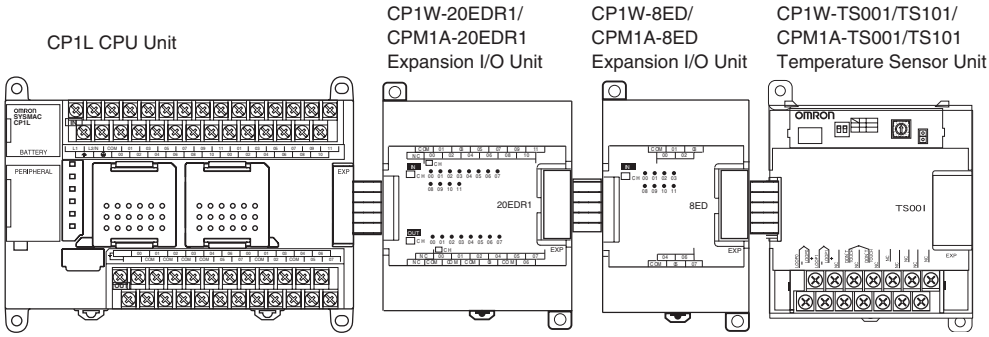

Setting Temperature Ranges

Note (1) Always turn OFF the power supply before setting the temperature range.

(2) Never touch the DIP switch or rotary switch during Temperature Sensor Unit operation. Static electricity may cause operating errors.

The Temperature Sensor Unit's DIP switch and rotary switch are used to set the temperature unit, to select 2-decimal-place Mode is to be used, and to set the temperature input range.

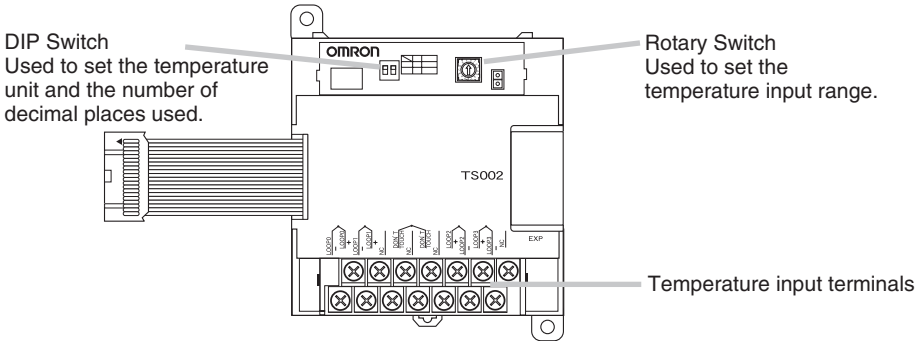

DIP Switch Settings

The DIP switch is used to set the temperature unit (°C or °F) and the number of decimal places used.

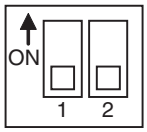

SW1	Setting		
1	Temperature unit	OFF	°C
		ON	°F
2	Number of decimal places used (See note.) (0.01 expression)	OFF	Normal (0 or 1 digit after the decimal point, depending on the input range)
		ON	2-decimal-place Mode

Note For details on 2-decimal-place Mode, refer to *Two-decimal-place Mode* on page 473.

Rotary Switch Setting

⚠**Caution** Set the temperature range according to the type of temperature sensor connected to the Unit. Temperature data will not be converted correctly if the temperature range does not match the sensor.

⚠**Caution** Do not set the temperature range to any values other than those for which temperature ranges are given in the following table. An incorrect setting may cause operating errors.

The rotary switch is used to set the temperature range.

Setting	CP1W-TS001/TS002 CPM1A-TS001/002			CP1W-TS101/TS102 CPM1A-TS101/102		
	Input type	Range (°C)	Range (°F)	Input type	Range (°C)	Range (°F)
0	K	–200 to 1,300	–300 to 2,300	Pt100	–200.0 to 650.0	–300.0 to 1,200.0
1		0.0 to 500.0	0.0 to 900.0	JPt100	–200.0 to 650.0	–300.0 to 1,200.0
2	J	–100 to 850	–100 to 1,500	---	Cannot be set.	
3		0.0 to 400.0	0.0 to 750.0	---		
4 to F	---	Cannot be set.		---		

Connecting Temperature Sensors

Thermocouples

CP1W-TS001/CPM1A-TS001

Either K or J thermocouples can be connected, but both of the thermocouples must be of the same type and the same input range must be used for each.

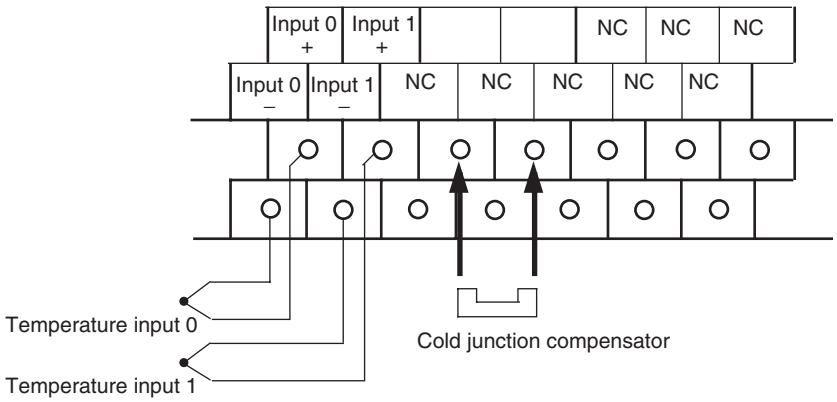

CP1W-TS002/CPM1A-TS002

Either K or J thermocouples can be connected, but all four of the thermocouples must be of the same type and the same input range must be used for each.

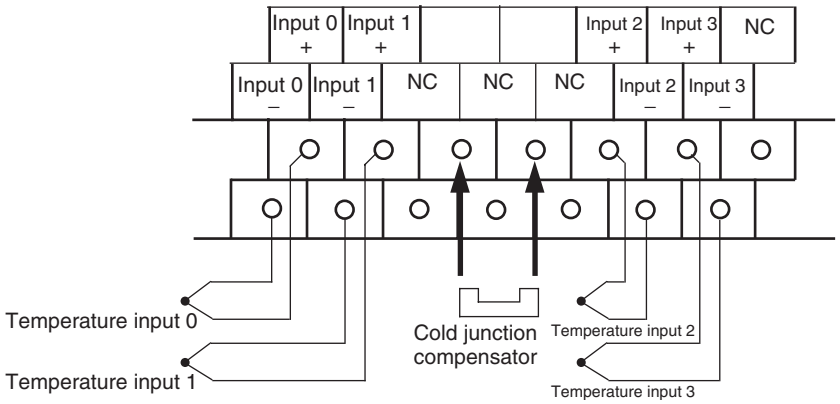

Note When using a Temperature Sensor Unit with a thermocouple input, observe the following precautions:

- Do not remove the cold junction compensator attached at the time of delivery. If the cold junction compensator is removed, the Unit will not be able to measure temperatures correctly.
- Each of the input circuits is calibrated with the cold junction compensator attached to the Unit. If the Unit is used with the cold junction compensator from other Units, the Unit will not be able to measure temperatures correctly.
- Do not touch the cold junction compensator. Doing so may result in incorrect temperature measurement.

Platinum Resistance Thermometers

CP1W-TS101/CPM1A-TS101

One or two Pt or JPt platinum resistance thermometers can be connected, but both of the thermometers must be of the same type and the same input range must be used for each.

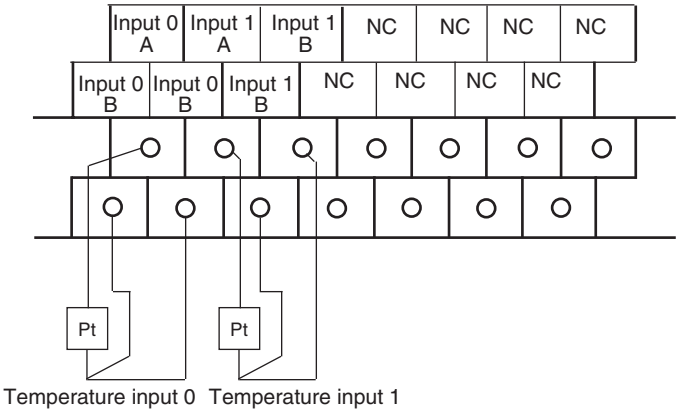

CP1W-TS102/CPM1A-TS102

Up to four Pt100 or JPt100 platinum resistance thermometers can be connected, but all four of the thermometers must be of the same type and the same input range must be used for each.

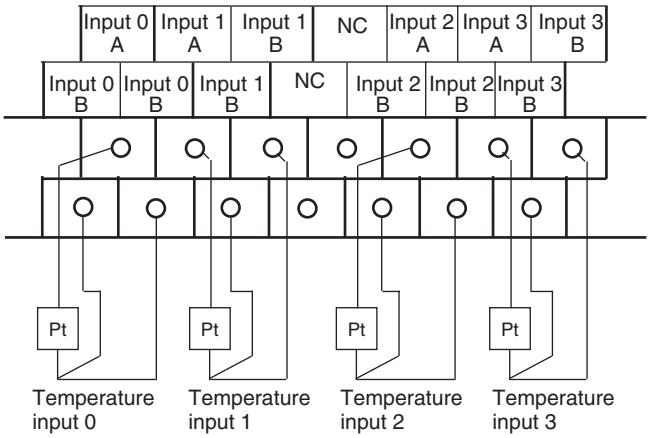

Note Do not connect anything to terminals not used for inputs.

Creating a Ladder Program

Word Allocations

Temperature Sensor Units are allocated words as Expansion Units, in order of connection. A Temperature Sensor Unit is allocated the next input words following the input words of the CPU Unit or previous Expansion Unit or Expansion I/O Unit. Four input words are allocated is to the 2-input CPM1A-TS001 or CPM1A-TS101 and four input words are allocated to the 4-input CPM1A-TS002 or CPM1A-TS102. No output words are allocated.

Example 1

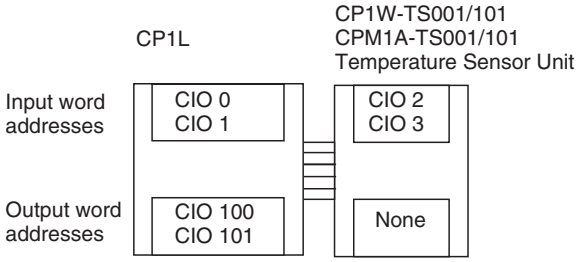

Example 2

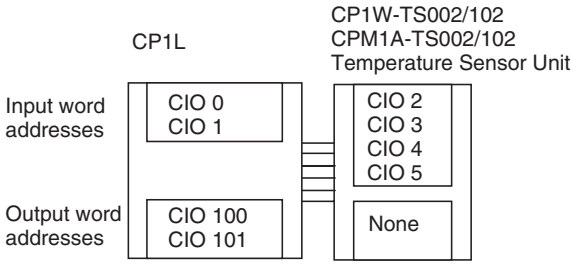

Converted Temperature Data

The temperature data will be stored in the input words allocated to the Temperature Sensor Unit in 4-digit hexadecimal.

TS002/TS102

m+1	Converted temperature data from input 0
m+2	Converted temperature data from input 1
m+3	Converted temperature data from input 2
m+4	Converted temperature data from input 3

TS001/TS101

m+1	Converted temperature data from input 0
m+2	Converted temperature data from input 1

”m” is the last input word allocated to the CPU Unit, Expansion I/O Unit, or Expansion Unit connected immediately before the Temperature Sensor Unit.

- Negative values are stored as 2’s complements.
- Data for range codes that include one digit after the decimal point are stored without the decimal point, i.e., 10 times the actual value is stored.

Input		Data conversion examples
Unit: 1°C	K or J	850°C → 0352 hex –200°C → FF38 hex
Unit: 0.1°C	K, J, Pt100 or JPt100	×10 500.0°C → 5000 → 1388 hex –20.0°C → –200 → FF38 hex –200.0°C → –2000 → F830 hex

- If the input temperature exceeds the maximum or minimum value in the temperature input range that has been set by ±20°C or ±20°F, the displayed value will be held.
- If the circuit disconnected, the open-circuit detection function will operate and the converted temperature data will be set to 7FFF.
- The open-circuit detection function will be automatically cleared and normal input temperature conversion will begin automatically when the input temperature returns to the convertible range.

Startup Operation

After power is turned ON, approximately 1 s is required for the first conversion data to be stored in the input word. During that period, the data will be 7FFE. Therefore, create a program as shown below, so that when operation begins simultaneously with startup it will wait for valid conversion data.

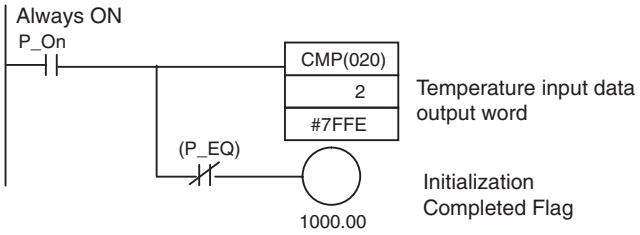

Handling Unit Errors

- Expansion Unit and Expansion I/O Unit errors are output to bits 0 to 6 of word A436. The bits are allocated from A436.00 in order starting from the Unit nearest the CPU Unit. CP1W-/CPM1A-TS002 and CP1W-/CPM1A-TS102 Temperature Sensor Units are allocated two bits each. Use these flags in the program when it is necessary to detect Expansion Unit/Expansion I/O Unit errors.
- When an error occurs, the Temperature Sensor Unit data becomes 7FFF hex (the same as for an open-circuit detection). With an open-circuit detection, it is not reflected in word A436.

Programming Example

1,2,3... 1. The following programming example shows how to convert the input data from 2 temperature sensor inputs to BCD and store the result in D0 and D1.

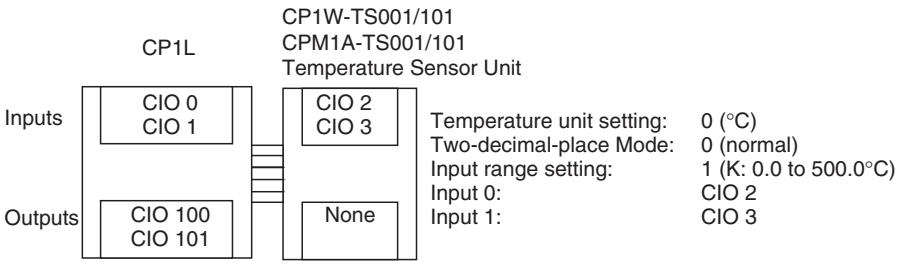

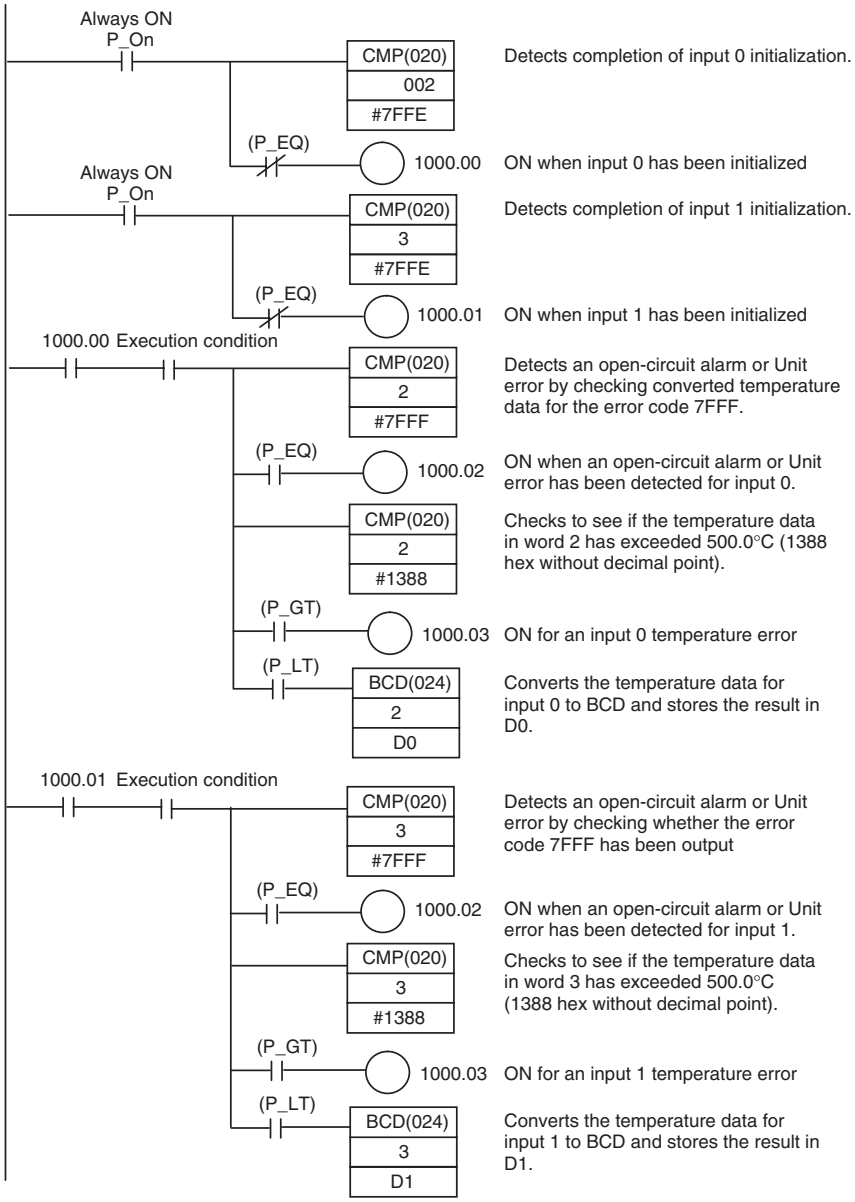

2. The following programming example shows how to convert the data for temperature input 0 to BCD and store the result in D0 and D1. “0001” is stored in D1 when the input data is a negative value. The following system configuration is used.

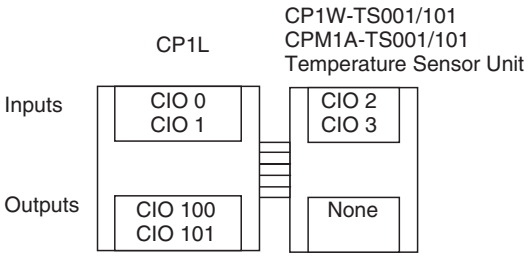

Temperature unit setting	0 (°C)
Two-decimal-place Mode	0 (normal)
Input range setting	1 (Pt100: –200.0 to 650.0°C)
Input 0	CIO 2

Programming with BCD(24) Instruction

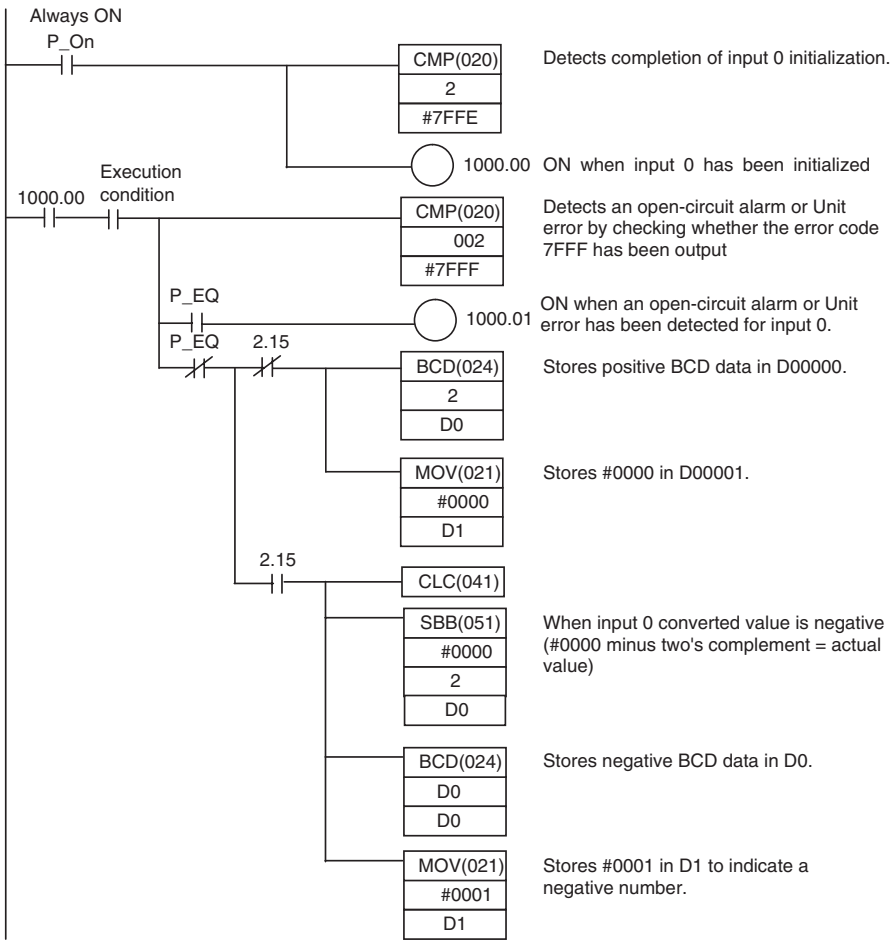

Programming with SCL2(–) Instruction

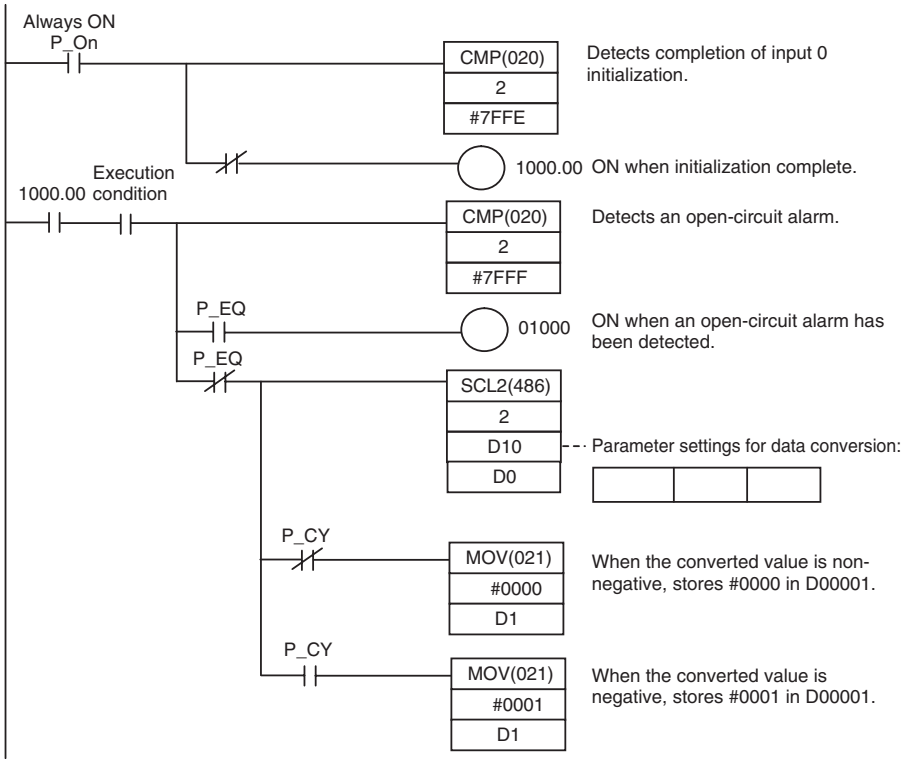

Operation

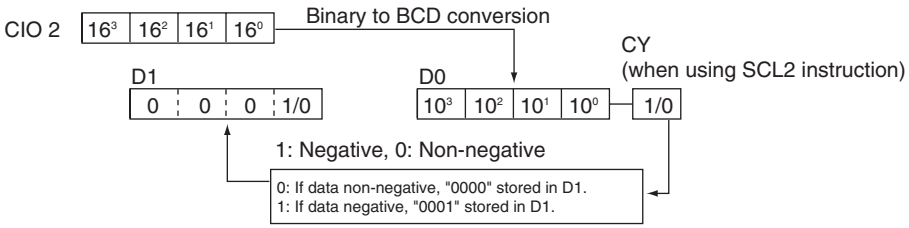

Two-decimal-place Mode

If pin 2 on the DIP switch is turned ON, values are stored to two decimal places. In this case, temperature data is stored as 6-digit signed hexadecimal (binary) data with 4 digits in the integer portion and 2 digits after the decimal point. The actual data stored in memory is 100 times the actual value, i.e., the decimal point is not indicated. Methods for handling this data are described in this section.

Note When set to store values to two decimal places, temperature data as far as two digits after the decimal point is converted to 6-digit binary data, but the actual resolution is not 0.01°C (°F). For this reason, there may be skipping and inaccuracies in the first digit after the decimal point (0.1). Treat any resolution above that specified for the normal data format as reference data.

Temperature Data Partitioning and Structure

Temperature Data (Actual Temperature x 100 Binary)

□□□□□□

Leftmost 3 Digits and Flags

15	14	13	12	11 to 8	7 to 4	3 to 0
Leftmost/ Rightmost Flag	Temperature Unit Flag	Open-circuit Flag	Not used.	Temperature data		
0: Leftmost 1: Rightmost	0: °C 1: °F	0: Normal 1: Error	Always 0	$\times 16^5$	$\times 16^4$	$\times 16^3$

Rightmost 3 Digits and Flags

15	14	13	12	11 to 8	7 to 4	3 to 0
Leftmost/ Rightmost Flag	Temperature Unit Flag	Open-circuit Flag	Not used.	Temperature data		
0: Leftmost 1: Rightmost	0: °C 1: °F	0: Normal 1: Error	Always 0	$\times 16^2$	$\times 16^1$	$\times 16^0$

Leftmost/Rightmost Flag: Indicates whether the leftmost or rightmost 3 digits are provided.
Temperature Unit Flag: Indicates whether the temperature is in °C or °F.
Open-circuit Flag: Turns ON (1) when an open-circuit is detected. The temperature data will be 7FF FFF if this flag is ON.

Data Conversion Examples

Example 1

Temperature: 1,130.25°C
×100: 113025
Temperature Data: 01B981 (hexadecimal for 113025)

Leftmost 3 Digits and Flags

	Flags				$\times 16^5$	$\times 16^4$	$\times 16^3$
Bits	15	14	13	12	11 to 08	07 to 04	03 to 00
Data	0	0	0	0	0	1	B

Normal
°C
Leftmost

→ 0 0 1 B

Flags — Temperature data

Rightmost 3 Digits and Flags

	Flags				$\times 16^2$	$\times 16^1$	$\times 16^0$
Bits	15	14	13	12	11 to 08	07 to 04	0
Data	1	0	0	0	9	8	1

Normal
°C
Rightmost

→ 8 9 8 1

Flags — Temperature data

Example 2

Temperature: −100.12°C
×100: −10012
Temperature Data: FFD8E4 (hexadecimal for −10012)

Leftmost 3 Digits and Flags

	Flags				$\times16^5$	$\times16^4$	$\times16^3$
Bits	15	14	13	12	11 to 08	07 to 04	03 to 00
Data	0	0	0	0	F	F	D

Normal
°C
Leftmost

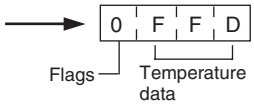

Rightmost 3 Digits and Flags

	Flags				$\times16^2$	$\times16^1$	$\times16^0$
Bits	15	14	13	12	11 to 08	07 to 04	03 to 00
Data	1	0	0	0	8	E	4

Normal
°C
Rightmost

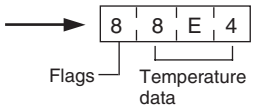

Example 3

Temperature: −200.12°F
×100: −20012
Temperature Data: FFB1D4 (hexadecimal for −20012)

Leftmost 3 Digits and Flags

	Flags				$\times16^5$	$\times16^4$	$\times16^3$
Bits	15	14	13	12	11 to 08	107 to 04	03 to 00
Data	0	1	0	0	F	F	B

Normal
°F
Leftmost

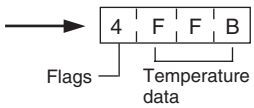

Rightmost 3 Digits and Flags

	Flags				$\times16^2$	$\times16^1$	$\times16^0$
Bits	15	14	13	12	11 to 08	07 to 04	03 to 00
Data	1	1	0	0	1	D	4

Normal
°F
Rightmost

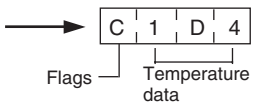

Example 4

Temperature: Open circuit (°F)
Temperature Data: 7FFF FFFF

Leftmost 3 Digits and Flags

	Flags				$\times 16^5$	$\times 16^4$	$\times 16^3$
Bits	15	14	13	12	11 to 08	07 to 04	03 to 00
Data	0	1	1	0	7	F	F

Error
°F
Leftmost

→ 6 7 F F

Flags — Temperature data

Rightmost 3 Digits and Flags

	Flags				$\times 16^2$	$\times 16^1$	$\times 16^0$
Bits	15	14	13	12	11 to 08	07 to 04	03 to 00
Data	1	1	1	0	F	F	F

Error
°F
Rightmost

→ E F F F

Flags — Temperature data

Note

(1) Leftmost digits are stored in the lower memory addresses. Treat the data in the lower memory address as the leftmost digits when programming.

(2) Be sure that the data is read at least once every 125 ms to allow for the CPU Unit's cycle time and communications time. Correct data may not be obtained if the read cycle is greater than 125 ms.

Programming Example

The following programming example shows how to use 2-decimal-place Mode for the following PC configuration.

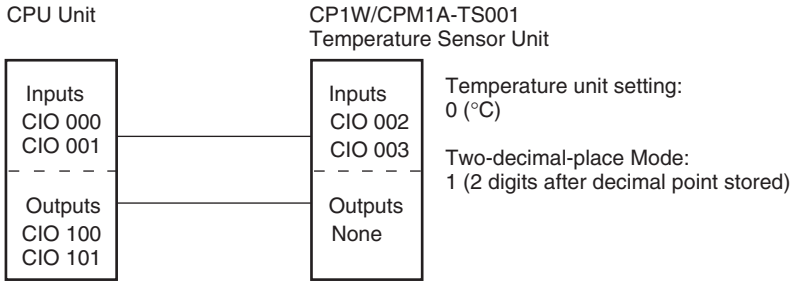

In this example, 100 times the temperature data for temperature input 0 is stored in binary form in D100 to D102.

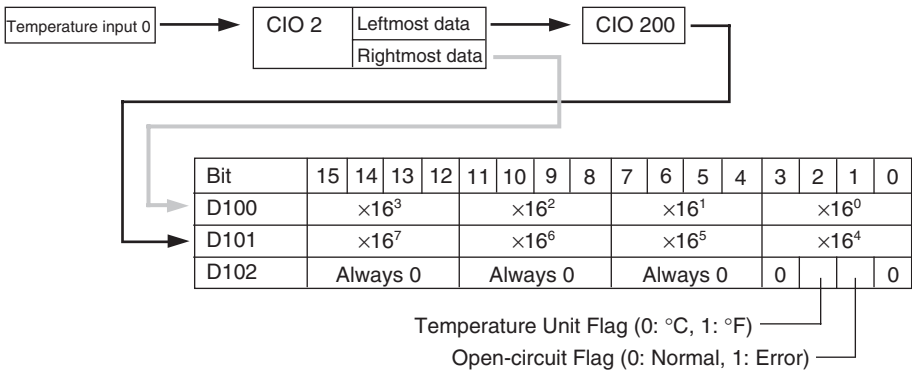

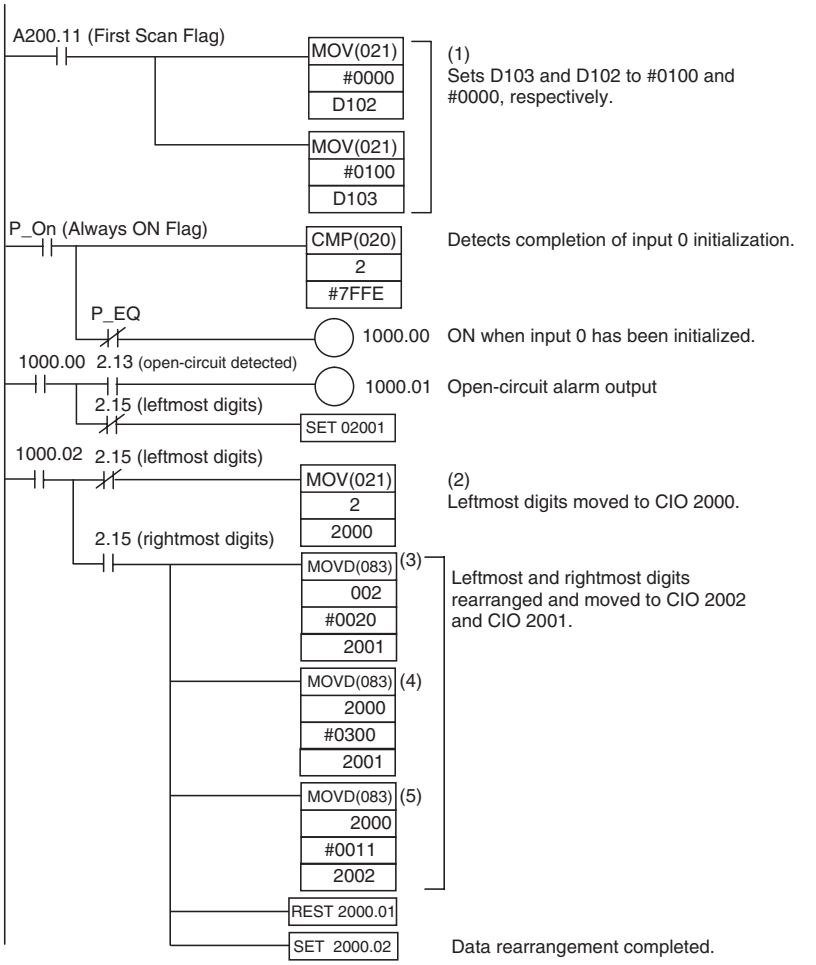
A200.11 (First Scan Flag)
MOV(021)
#0000
D102
MOV(021)
#0100
D103
(1)
Sets D103 and D102 to #0100 and #0000, respectively.
P_On (Always ON Flag)
CMP(020)
2
#7FFE
Detects completion of input 0 initialization.
P_EQ
1000.00
ON when input 0 has been initialized.
1000.00
2.13 (open-circuit detected)
1000.01
Open-circuit alarm output
2.15 (leftmost digits)
SET 02001
1000.02
2.15 (leftmost digits)
MOV(021)
2
2000
(2)
Leftmost digits moved to CIO 2000.
2.15 (rightmost digits)
MOVD(083)
(3)
002
#0020
2001
Leftmost and rightmost digits rearranged and moved to CIO 2002 and CIO 2001.
MOVD(083)
(4)
2000
#0300
2001
MOVD(083)
(5)
2000
#0011
2002
REST 2000.01
SET 2000.02
Data rearrangement completed.

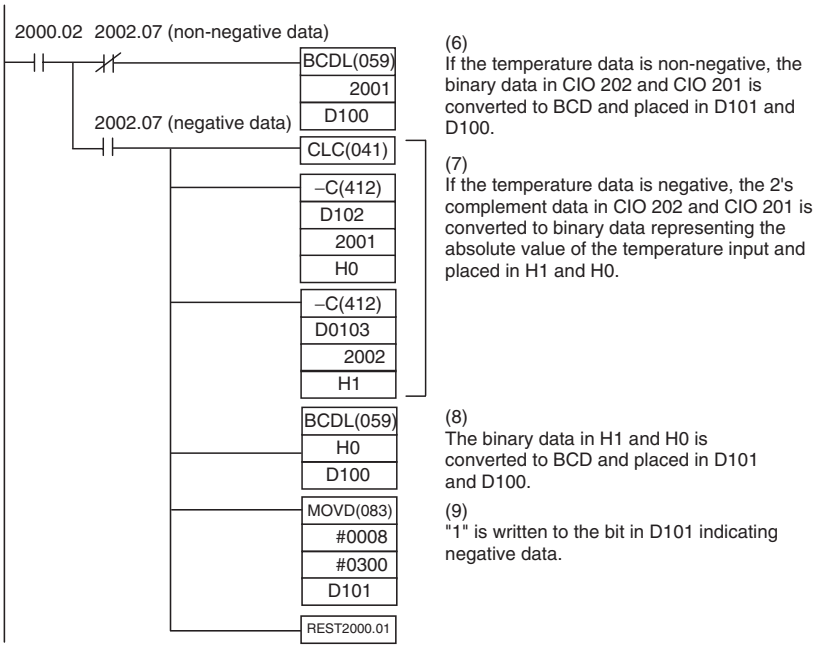
2000.02
2002.07 (non-negative data)
BCDL(059)
2001
D100
(6)
If the temperature data is non-negative, the binary data in CIO 202 and CIO 201 is converted to BCD and placed in D101 and D100.
2002.07 (negative data)
CLC(041)
–C(412)
D102
2001
H0
–C(412)
D0103
2002
H1
(7)
If the temperature data is negative, the 2's complement data in CIO 202 and CIO 201 is converted to binary data representing the absolute value of the temperature input and placed in H1 and H0.
BCDL(059)
H0
D100
(8)
The binary data in H1 and H0 is converted to BCD and placed in D101 and D100.
MOVD(083)
#0008
#0300
D101
(9)
"1" is written to the bit in D101 indicating negative data.
REST2000.01

Description of Operation

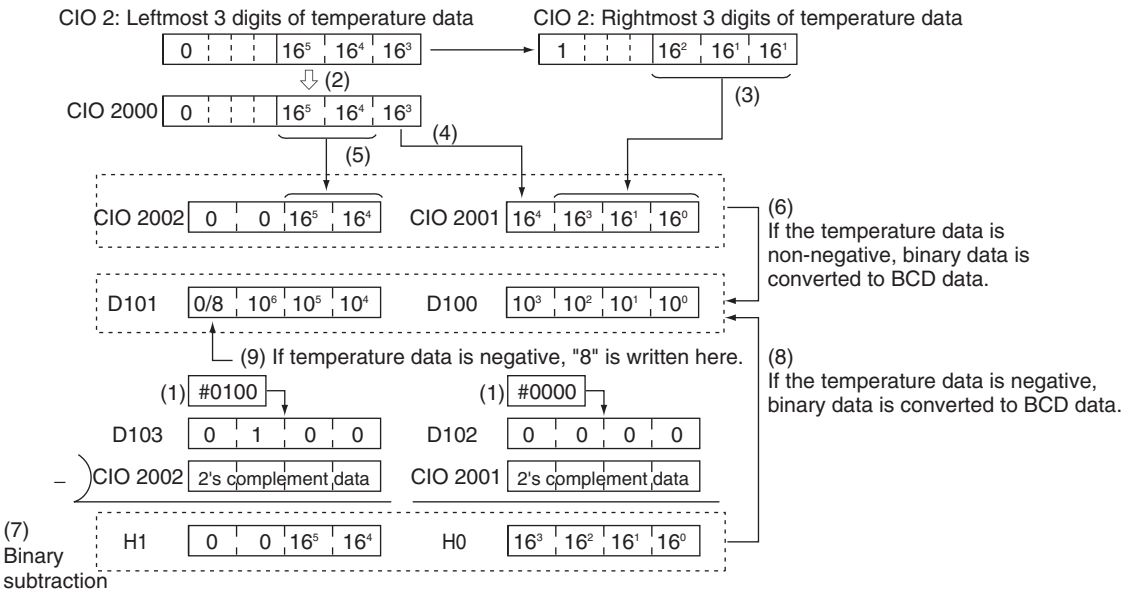

7-6 CompoBus/S I/O Link Units

The CP1L can function as a slave to a CompoBus/S Master Unit (or SRM1 CompoBus/S Master Control Unit) when a CP1W-SRT21/CPM1A-SRT21 CompoBus/S I/O Link Unit is connected. The CompoBus/S I/O Link Unit establishes an I/O link of 8 inputs and 8 outputs between the Master Unit and the PLC. Up to three CompoBus/S I/O Link Units, including other Expansion I/O Units, can be connected to a CP1L CPU Unit.

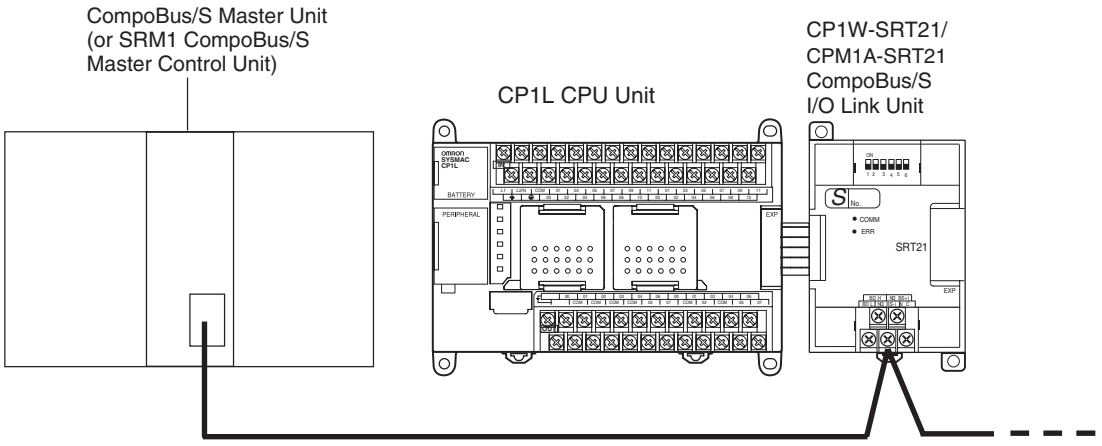

From the standpoint of the CP1L CPU Unit, the 8 input bits and 8 output bits allocated to the CompoBus/S I/O Link Unit are identical to input and output bits allocated to Expansion I/O Units even though the CompoBus/S I/O Link Unit does not control actual inputs and outputs. The input and output bits allocated to the CompoBus/S I/O Link Unit are one side of an I/O link between the slave CPU Unit and the CPU Unit to which the Master Unit is connected.

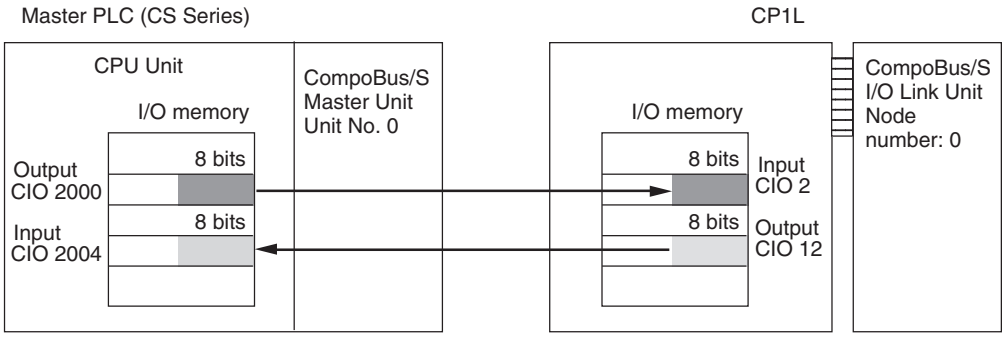

Specifications

Model number	CP1W-SRT21/CPM1A-SRT21
Master/slave	CompoBus/S Slave
Number of I/O points	8 input points, 8 output points
Number of words allocated in CPU Unit I/O memory	1 input word, 1 output word (Allocated in the same way as Expansion Units and Expansion I/O Units.)
Node number setting	Set using the DIP switch (Set before turning on the CPU Unit's power supply.)

LED Indicators

Indicator	Name	Color	Meaning
COMM	Communications Indicator	Yellow	ON: Communications in progress. OFF: Communications stopped or error has occurred.
ERR	Error indicator	Red	ON: A communications error has occurred. OFF: Indicates normal communications or stand-by.

CP1W-SRT21/CPM1A-SRT21 CompoBus/S I/O Link Unit

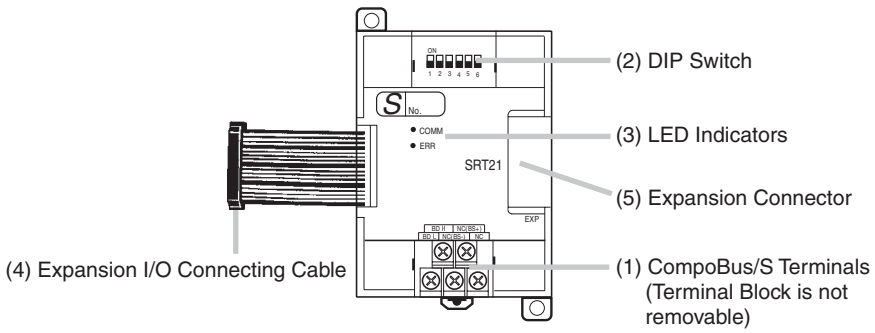

(1) CompoBus/S Terminals

The following CompoBus/S terminals are provided: CompoBus/S communications data high/low terminals, NC terminals for communications power supply plus (+) and minus (–), and an NC terminal. (Power is supplied internally for this Unit, so the NC terminals for communications power supply can be used as relay terminals.)

(2) DIP Switch

Used to specify the node number for the CompoBus/S I/O Link Unit. (Refer to the following table.)

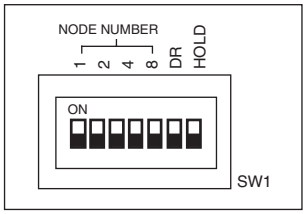

Pin labels	Contents		
1 2 4 8	Node Number Setting / SW1 (8 4 2 1): 0: 0 0 0 0 1: 0 0 0 1 2: 0 0 1 0 3: 0 0 1 1 4: 0 1 0 0 5: 0 1 0 1 6: 0 1 1 0 7: 0 1 1 1 8: 1 0 0 0 9: 1 0 0 1 10: 1 0 1 0 11: 1 0 1 1 12: 1 1 0 0 13: 1 1 0 1 14: 1 1 1 0 15: 1 1 1 1 1 = ON, 0 = OFF		
DR	ON	Long-distance communications mode (See note.)	
	OFF	High-speed communications mode	
HOLD	ON	Retain inputs after a communications error.	
	OFF	Clear inputs after a communications error.	

Note: The long-distance communications mode can be used only when one of the following Master Units is connected: C200HW-SRM21-V1, CQM1-SRM21-V1, or SRM1-C0□-V2.

(3) LED Indicators

Used to show the CompoBus/S communications status.

Indicator	Name	Color	Meaning
COMM	Communications indicator	Yellow	ON: Communications in progress. OFF: Communications stopped or error has occurred.
ERR	Error indicator	Red	ON: A communications error has occurred. OFF: Indicates normal communications or stand-by.

(4) Expansion I/O Connecting Cable

Connected to the expansion connector of a CP1L CPU Unit or a Expansion Unit or Expansion I/O Unit. The cable is provided with the CompoBus/S I/O Link Unit and cannot be removed.

Note Do not touch the cables during operation. Static electricity may cause operating errors.

(5) Expansion Connector

Used to connect Expansion Units or Expansion I/O Units.

Operating Procedure

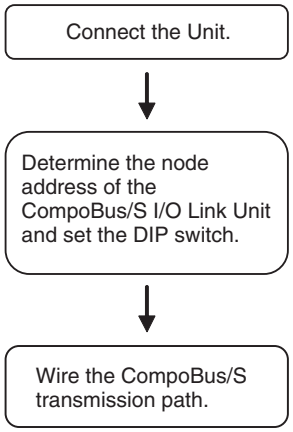

- Connect the CompoBus/S I/O Link Unit.
- The node number should be a unique number between 0 and 15.
- Use the DIP switch to set the CompoBus/S I/O Link Unit fs node number, communications mode, and the status of output data when a communications error occurs.
- Connect the CompoBus/S I/O Link Unit to a CompoBus/S transmission path.

Connecting the CompoBus/S I/O Link Unit

CompoBus/S I/O Link Units are connected to the CP1L CPU Unit. For CP1L M-type CPU Units, up to three Units can be connected, including any other Expansion Units and Expansion I/O Units. The Units can be connected in any order from the CPU Unit. For CP1L L-type CPU Units, one Unit can be connected.

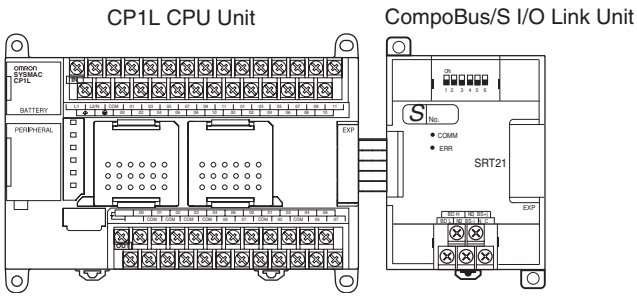

I/O Allocation

I/O words are allocated to the CompoBus/S I/O Link Unit in the same way as to other Expansion Units and Expansion I/O Units, i.e., the next available input and output words are allocated. As shown below, when “m” is the last allocated input word and “n” is the last allocated output word, the CompoBus/S I/O Link Unit is allocated “m+1” as its input word and “n+1” as its output word.

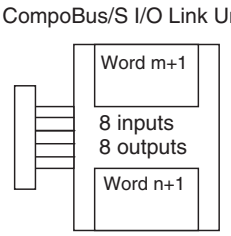

In the following example, a CompoBus/S I/O Link Unit is connected as the first Unit after the CP1L CPU Unit.

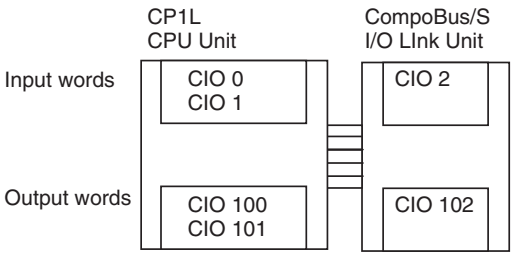

The input word (m+1) contains the 8 bits of data from the Master Unit and two CompoBus/S communications flags.

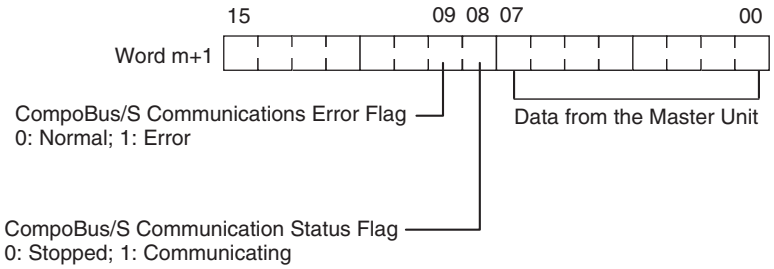

Write the data to be transmitted to the Master Unit in the output word (n+1).

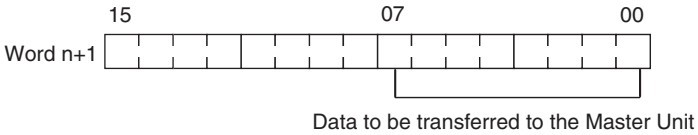

Note

(1) The 8 bits of I/O data are not always transmitted simultaneously. In other words, 8 bits of data transmitted from the Master CPU Unit at the same time will not always reach the Slave CPU Unit simultaneously, and 8 bits of data transmitted from the Slave CPU Unit at the same time will not always reach the Master CPU Unit simultaneously.
When the 8 bits of input data must be read together, modify the ladder program in the CPU Unit receiving the data. For example, read the input data twice in succession and accept the data only when the two values match.

(2) Unused bits in the CompoBus/S I/O Link Unit's output word can be used as work bits, but unused bits in the output slaves cannot be used as work bits.

(3) Unused bits in input word cannot be used as work bits.

Determining the Node Number and Making DIP Switch Settings

Node Number

- The CompoBus/S I/O Link Unit is a Slave Unit with 8 input bits and 8 output bits. The node number setting is made using the DIP switch; the inputs and outputs share the same node number.
- The range of possible node number settings is determined by the type of PLC the Master Unit is mounted to and the settings on the Master Unit. For details refer to the *CompoBus/S Operation Manual*.

DIP Switch Settings

Use the DIP switch to set the CompoBus/S I/O Link Unit's node number, communications mode, and the status of output data when a communications error occurs.

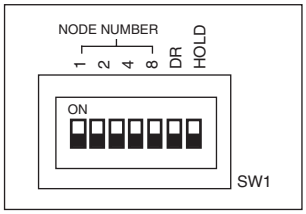

Pin labels	Contents		
1 2 4 8	Node Number Setting / SW1 (8 4 2 1): 0: 0 0 0 0 1: 0 0 0 1 2: 0 0 1 0 3: 0 0 1 1 4: 0 1 0 0 5: 0 1 0 1 6: 0 1 1 0 7: 0 1 1 1 8: 1 0 0 0 9: 1 0 0 1 10: 1 0 1 0 11: 1 0 1 1 12: 1 1 0 0 13: 1 1 0 1 14: 1 1 1 0 15: 1 1 1 1 1 = ON, 0 = OFF		
DR	ON	Long-distance communications mode (See note.)	
	OFF	High-speed communications mode	
HOLD	ON	Retain inputs after a communications error.	
	OFF	Clear inputs after a communications error.	

Note: The long-distance communications mode can be used only when one of the following Master Units is connected: C200HW-SRM21-V1, CQM1-SRM21-V1, or SRM1-C0□-V2.

Note Always turn OFF the power supply before changing the DIP switch settings.

Wiring the CompoBus/S Communications Path

Wire the CompoBus/S communications path as shown in the following diagrams.

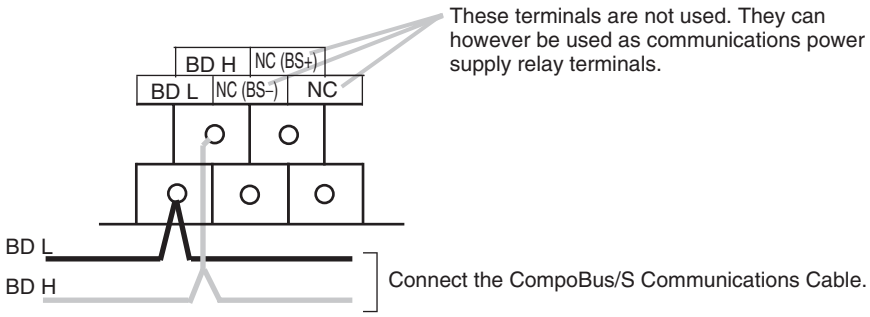

7-7 DeviceNet I/O Link Units

Connecting a CPM1A-DRT21 DeviceNet I/O Link Unit (with 32 inputs and 32 outputs as built-in I/O) to function as a slave allows the CP1L to be used as a DeviceNet slave. A maximum of three DeviceNet I/O Link Units can be connected to the CP1L to create I/O Links for up to 192 points (96 inputs and 96 outputs) between the CP1L and the DeviceNet master.

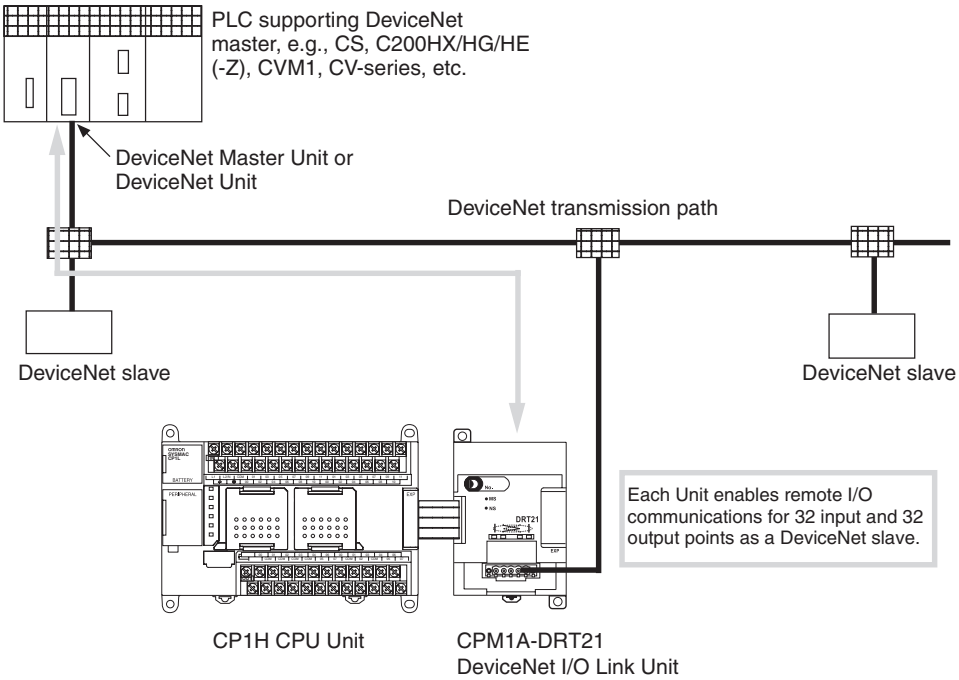

From the standpoint of the CP1L CPU Unit, the 32 input bits and 32 output bits allocated to the DeviceNet I/O Link Unit are identical to input and output bits allocated to Expansion I/O Units even though the DeviceNet I/O Link Unit does not control external inputs and outputs. The input and output bits allocated to the DeviceNet I/O Link Unit are one side of an I/O link between the slave CPU Unit and the CP1L CPU Unit to which the Master Unit is connected.

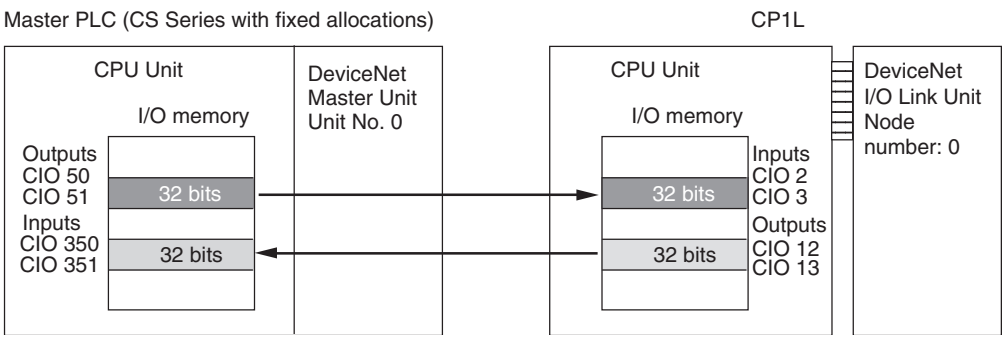

Note Refer to the *DeviceNet Slaves Operation Manual* (W347) for details on DeviceNet networks.

Specifications

Model number	CPM1A-DRT21
Master/slave	DeviceNet Slave

Number of I/O points	32 input points, 32 output points
Number of words allocated in CPU Unit I/O memory	2 input words, 2 output words (Allocated in the same way as other Expansion Units and Expansion I/O Units.)
Node number setting	Set using the rotary switches (Set before turning ON the CPU Unit's power supply.)
Communications current consumption	48 mA

CPM1A-DRT21 DeviceNet I/O Link Unit

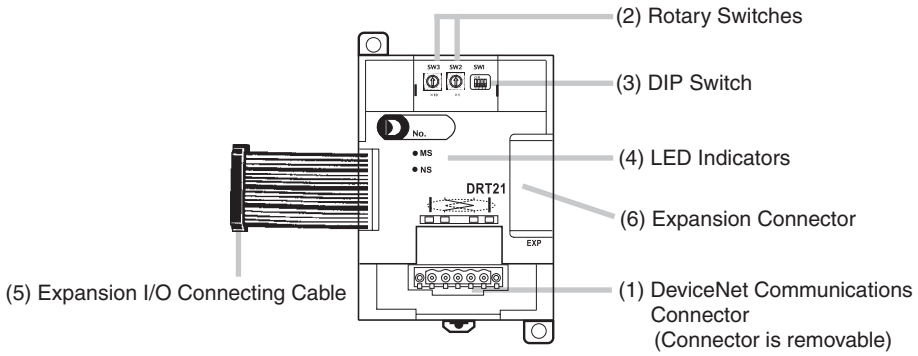

(1) DeviceNet Communications Connector
Used to connect DeviceNet communications. For the wiring, use the connector provided with the CPM1A-DRT21 or use a connector purchased separately.

(2) Rotary Switches (SW2, SW3)
Used to set DeviceNet node numbers.

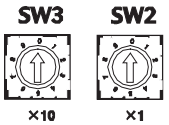

Setting range: 0 to 63 (Do not set 64 to 99.)

(3) DIP Switch (SW1)
Used to set the DeviceNet baud rate and the output hold function.

Baud rate setting (See note.)			
Pin 1	**Pin 2**	**Baud rate**	**Max. transmission path length**
OFF	OFF	125 kbps	500 m
ON	OFF	250 kbps	250 m
OFF	ON	500 kbps	100 m
ON	ON	Not allowed.	---

Output hold function setting	
Pin 4	DeviceNet baud rate
OFF	Clears remote outputs when communications error occurs. (Outputs turned OFF for each logic value.)
ON	Holds remote outputs when communications error occurs.

Note When using Expansion Unit/Expansion I/O Unit Error Flags (A436) in the program, set pin 4 on the DIP switch to ON. If communications are set to be cleared, the timing for clearing outputs and setting the Error Flags may not agree.

(4) LED Indicators
Used to indicate CPM1A-DRT21 status, as shown in the following table.

Indicator	Color	Status	Condition	Meaning
MS	Green	Lit	Normal status	• Normal status
		Flashing	Not set	• Switch settings being read
	Red	Lit	Fatal error	• Fatal hardware error (watchdog timer)
		Flashing	Nonfatal error	• Incorrect switch settings.
	---	OFF	Power not supplied.	• Power not supplied. • Waiting for initialization to start. • Reset in progress.
NS	Green	Lit	Online and communications established.	• Network normal and communications established.
		Flashing	Online and communications not established.	• Network normal and communications not established.
	Red	Lit	Fatal communications error	Unit has detected network status preventing normal communications. • Node number duplications • Bus OFF detected.
		Flashing	Nonfatal communications error	• Communications timeout or communications error for one or more slaves.
	---	OFF	Online and power OFF.	Waiting for node number check by master. • Switch setting error. • Power not supplied.

(5) Expansion I/O Connecting Cable
Connected to the expansion connector of a CP1L CPU Unit or an Expansion Unit or Expansion I/O Unit. The cable is included with the DeviceNet Unit and cannot be removed.

Note Do not touch the cables during operation. Static electricity may cause operating errors.

(6) Expansion Connector
Used for connecting Expansion Units or Expansion I/O Units.

Handling Unit Errors

If a communications error occurs while the slave is on standby, the appropriate bit in word A436 will turn ON. The appropriate bit is determined by the order in which the Expansion Units and Expansion I/O Units are connected. The Unit nearest to the CPU Unit uses A436.00. Use these flags in the program when it is necessary to detect errors.

Operating Procedure

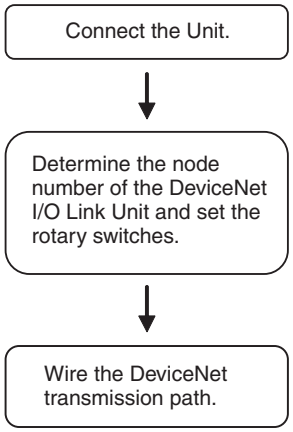

- Connect the DeviceNet I/O Link Unit.
- The node number should be a unique number between 0 and 63.
- Use the DIP switch to set the DeviceNet I/O Link Unit fs baud rate and the status of output data when a communications error occurs.
- Connect the DeviceNet I/O Link Unit to a DeviceNet transmission path.

Connecting the DeviceNet I/O Link Unit

DeviceNet I/O Link Units are connected to the CP1L CPU Unit. For CP1L M-type CPU Units, up to three Units can be connected, including any other Expansion Units and Expansion I/O Units. The Units can be connected in any order from the CPU Unit. For CP1L L-type CPU Units, one Unit can be connected.

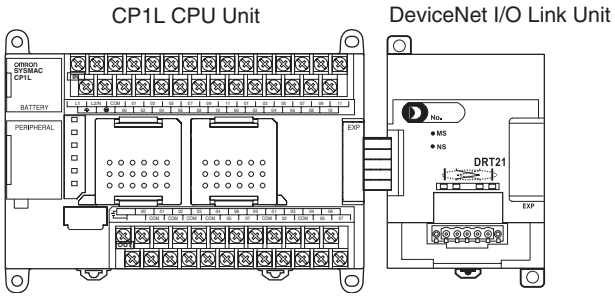

I/O Allocation

I/O words are allocated to the DeviceNet I/O Link Unit in the same way as to Expansion I/O Units or other Expansion Units, i.e., the next available input and output words are allocated. As shown below, when “m” is the last allocated input word and “n” is the last allocated output word, the DeviceNet I/O Link Unit is allocated “m+1” as its input word and “n+1” as its output word.

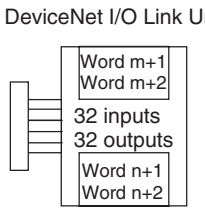

In the following example, a CompoBus/S I/O Link Unit is connected as the first Unit after the CP1L CPU Unit.

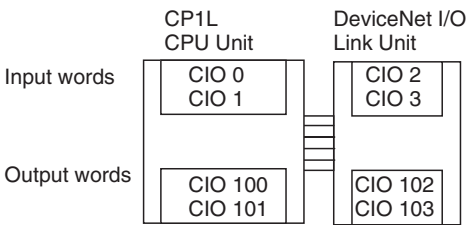

All of the words allocated to the DeviceNet I/O Link Unit are used to read and write data between the CPU Unit of the DeviceNet I/O Link Unit and the CPU Unit of the DeviceNet master, as shown in the following illustration.

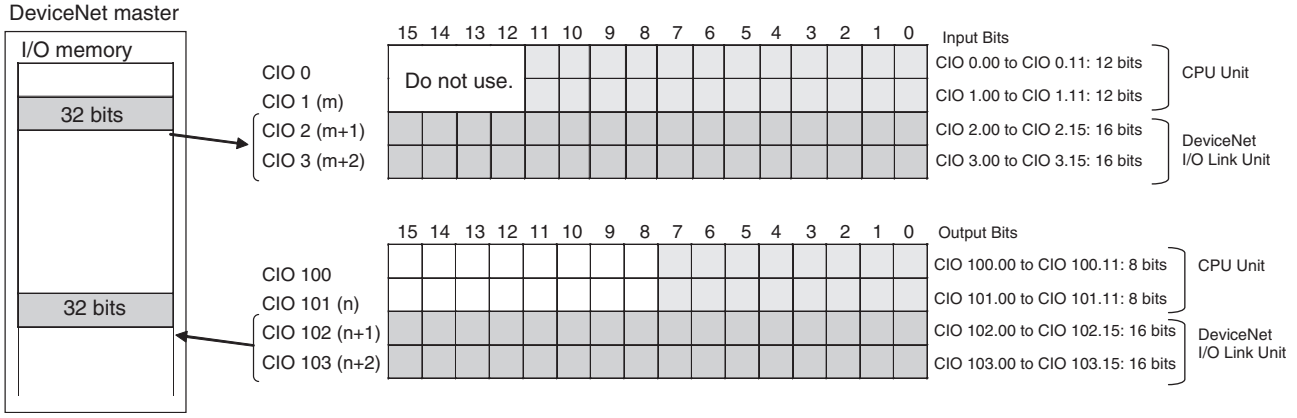

Note

(1) The 32 bits each of I/O data are not always transmitted simultaneously. In other words, 32 bits of data transmitted from the Master CPU Unit at the same time will not always reach the CP1L CPU Unit simultaneously, and 32 bits of data transmitted from the CP1L CPU Unit at the same time will not always reach the Master CPU Unit simultaneously.
When the 32 bits of input data must be read together, modify the ladder program in the CPU Unit receiving the data. For example, read the input data twice in succession and accept the data only when the two values match.

(2) Unused bits in the DeviceNet I/O Link Unit's output words can be used as work bits if they are not used for output from the slave.

(3) Unused bits in input words cannot be used as work bits.

Determining the Node Number and Making DIP Switch Settings

Setting Node Numbers

Use rotary switches SW2 and SW3 to set DeviceNet node number. The setting range is from 00 to 63, and 64 to 99 cannot be set. Rotary switch settings go into effect when the power is turned ON.

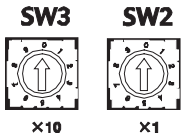

Setting range: 0 to 63 (Do not set 64 to 99.)

Note The actual range of node numbers that can be set depends on the type of PLC to which the Master Unit is mounted, and on the Master Unit setting. For details, refer to the *DeviceNet DRT1-series Slaves Operation Manual*.

Setting the DIP Switch (SW1)

Used to set the DeviceNet baud rate and the output hold function.

Baud Rate

Pin 1	Pin 2	Baud rate	Max. transmission path length
OFF	OFF	125 kbps	500 m
ON	OFF	250 kbps	250 m

Pin 1	Pin 2	Baud rate	Max. transmission path length
OFF	ON	500 kbps	100 m
ON	ON	Not allowed.	---

Output Hold Function

Pin 4	DeviceNet baud rate
OFF	Clears remote outputs when communications error occurs. (Outputs turned OFF for each logic value.)
ON	Holds remote outputs when communications error occurs.

Note When using Expansion Unit/Expansion I/O Unit Error Flags (A436) in the program, turn ON pin 4 on the DIP switch. If communications are set to be cleared, the timing for clearing outputs and setting the Error Flags may not agree.

Wiring the DeviceNet Communications Path

When using a CPM1A-DRT21 DeviceNet I/O Link Unit, wire the DeviceNet communications cable as shown in the following diagram.

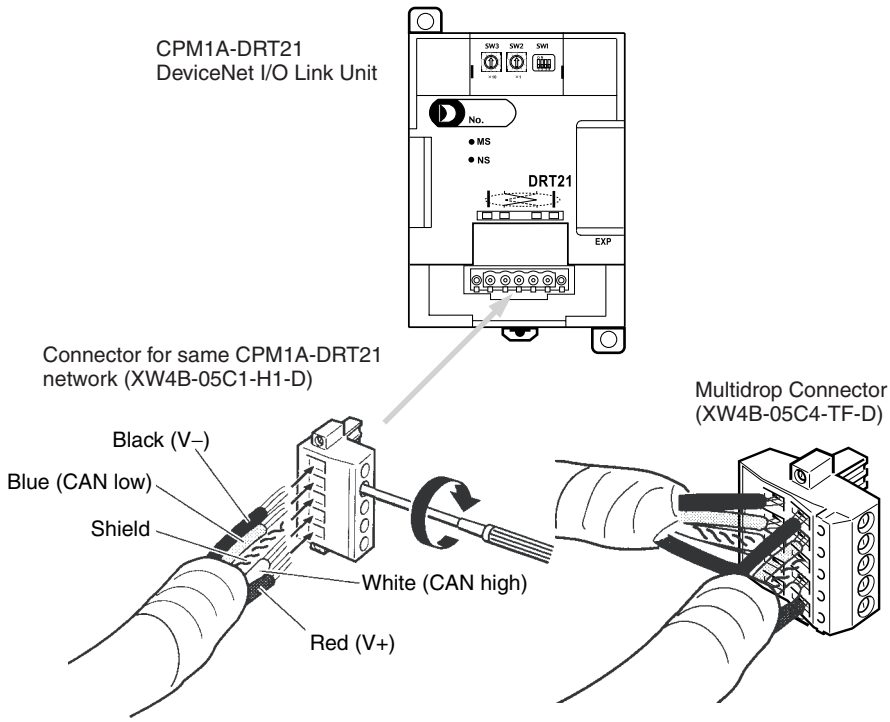

DeviceNet Connectors

Use the following connectors.

Model	XW4B-05C1-H1-D	XW4B-05C4-TF-D
Form and specifications	OMRON connector with screws (provided with CPM1A-DRT21) 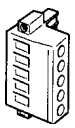	OMRON connector for multidrop connections (See note.) 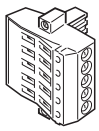

Note Use the XW4B-05C4-TF-D when wiring multidrop connections using Thick Cables.

Use the following screwdriver for the above connector.

XW4Z-00C

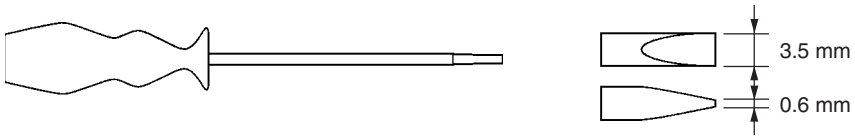

I/O Response Time

Refer to the *DeviceNet Slaves Operation Manual* (W347) for details on the response time. The data read/write time for one cycle for the CPM1A-DRT21 is approximately 0.5 ms. Add a maximum of 1 ms to the I/O response time.

SECTION 8
LCD Option Board

This section gives an outline of the LCD Option Board, explains how to install and remove the LCD Option Board, and describes the functions including how to monitor and make settings for the PLC. It also lists the errors during operation and provides probable causes and countermeasures for troubleshooting.

8-1 Features 492
8-2 Specifications 493
8-3 Part Names 494
8-4 Installation and Removing 495
8-5 Basic Operation 496
8-5-1 Startup 496
8-5-2 Screen Transitions 497
8-5-3 Operation Examples 499
8-6 LCD Option Board Function 501
8-6-1 Function Overview 501
8-6-2 PLC Mode 504
8-6-3 I/O Memory Setting 505
8-6-4 PLC Setup 510
8-6-5 Analog 512
8-6-6 Error 513
8-6-7 Memory Cassette 516
8-6-8 User Monitor Screen 520
8-6-9 Message Screen 529
8-6-10 Timer Switch 534
8-6-11 Data Backup 540
8-6-12 Language Selection 543
8-6-13 PLC Cycle Time 544
8-6-14 PLC Clock Setting 545
8-6-15 PLC System Information 546
8-6-16 LCD Backlight Setting 547
8-6-17 LCD Contrast Setting 548
8-6-18 LCD Factory Setting 549
8-7 Trouble Shooting 550
8-7-1 Symptom at Power ON or during Operation 550
8-7-2 Communication Error Message during Operation 550
8-7-3 Deleting EEPROM Error 551

8-1 Features

LCD Option Board is small but has a wide range of functions and is easy to use.

Powerful Display and Setting Functions

Equipped for easy display and set up of user-specified messages, time or other data of the PLC.

User Monitor Screen

Preset the screen, including I/O memory and text string, which user will monitor frequently. So it is easy for user to acquire his necessary data. It is possible to register up to 16 screens.

Timer Switch

Preset the timer, including Day, Weekly and Calendar Timer. Each timer can execute a trans-day, trans-week or trans-year operation. So a 24-hours control will be effected by one-step setting. It is possible to register up to 16 timers for each kind.

Easier to Identify with Backlight

When PLC error occurs, the red backlight of LCD display screen will begin to blink, quickly altering you of the error.

Normally the backlight is green. The automatic cutout time for the backlight can be set to occur from 2 to 30 minutes, or even set permanently to OFF or ON position.
The contrast level can also be adjusted.

8-2 Specifications

Item	Specification
Model	CP1W-DAM01
Type	Built-in
Serial port	Only port 1
Communication protocol	Toolbus
DC consumption	5V : 40mA 24V : 0mA
Dimensions	43×36×23 mm (W×H×D)
Weight	20g max.
Screen size	2.6cm×1.45cm
Total characters on screen	4 lines×12 characters
Font size	5×7 dot
Backlight color	Green / Red
Display language	English / Japanese (Katakana)
Ambient operating temperature	0 to 55°C
Ambient operating humidity	10% to 90% (with no condensation)
Atmosphere	No corrosive gas.
Ambient storage condition	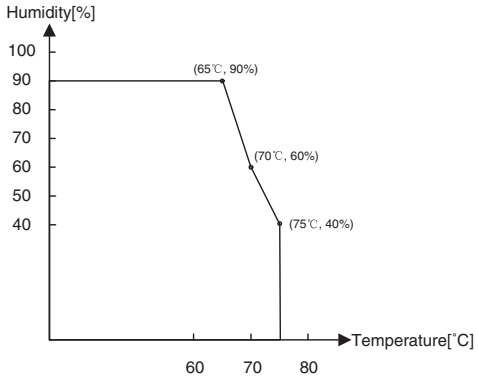 (with no condensation)

8-3 Part Names

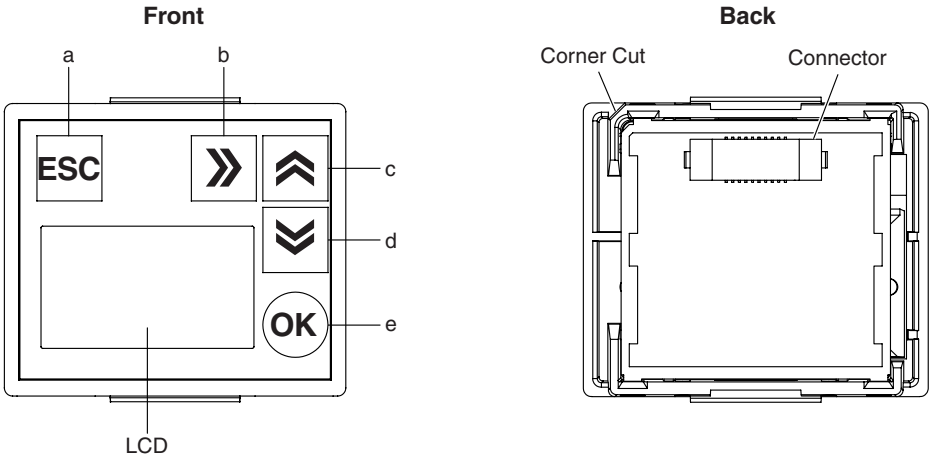

Operation Button

No.	Button	Function
a	ESC ESC	Cancel the setting and return to the up-level menu.
b	Forward	Move the column cursor. Press and hold the button, the column cursor will move forward continuously.
c	Up	Move the line cursor up. Change numerals and parameters. Press and hold the button, the line cursor will move up continuously and the parameters will increase continuously.
d	Down	Move the line cursor down. Change numerals and parameters. Press and hold the button, the line cursor will move down continuously and the parameters will decrease continuously.
e	OK OK	Confirm the setting.

Backlight

Color	Meaning
Green	PLC is normal.
Red	PLC error has occurred.

8-4 Installation and Removing

Installation

The following processing explains how to install and remove a LCD Option Board.

⚠ **Caution** Always turn OFF the power supply to the CPU Unit and wait until all the operation indicators go out before installing or removing the LCD Option Board.

1,2,3... 1. Press the up/down lock levers on both sides of the Option Board slot cover 1 at the same time to unlock the cover, and then pull the cover out.
2. Check the alignment to make the corner cut of the LCD Option Board fit in the Option Board slot 1, and firmly press the LCD Option Board in until it snaps into place.

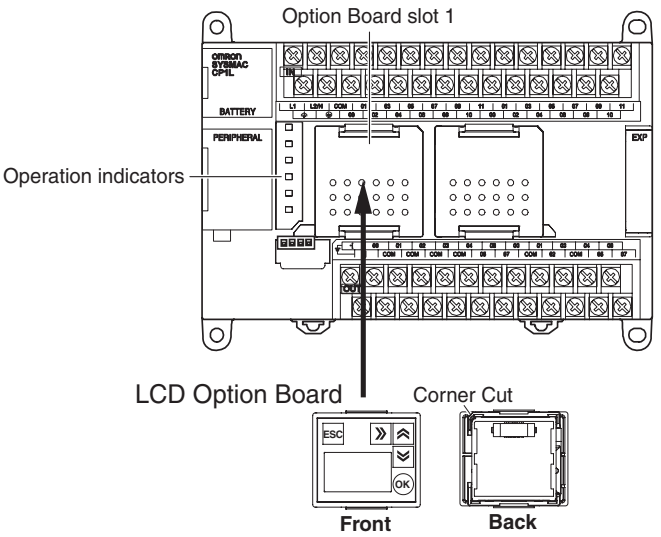

3. Switch DipSW4 of the CPU Unit to ON.
Note DipSW4 is OFF at shipment

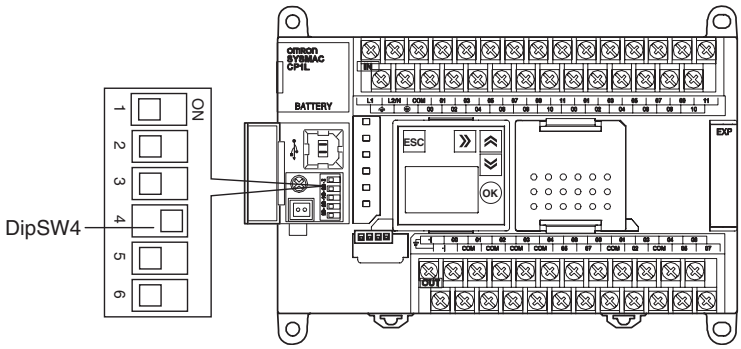

Removing

Press the up/down lock levers on both sides of the LCD Option Board at the same time to unlock the Option Board, and then pull it out.

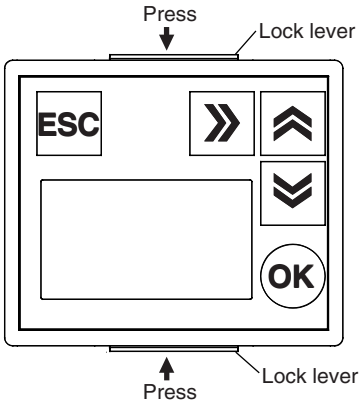

8-5 Basic Operation

8-5-1 Startup

According to the operation status of the LCD Option Board, it will display different screens when the CPU Unit power is turned ON.

Normal Startup

When the CPU Unit power is turned ON, the LCD Option Board will initialize hardware and check EEPROM, then check communication between the LCD Option Board and the CPU Unit. If startup is normal, LCD will display Clock Screen as shown below.

Clock Screen

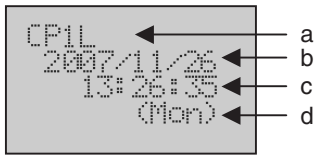

No.	Description
a	Type of the CPU Unit
b	Date of the CPU Unit
c	Time of the CPU Unit
d	Week abbreviation of the CPU Unit

Startup Failure

- If EEPROM is faulty, LCD will display EEPROM Error Screen and the red backlight will blink. Refer to *8-7 Trouble Shooting*.

EEPROM Error Screen

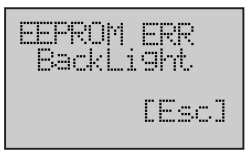

- If the communication between the LCD Option Board and the CPU Unit has failed, LCD will display NG screen. Refer to *8-7 Trouble Shooting*.

NG Screen

Note If the LCD Option Board receives no response from the CPU Unit within 3 seconds during operation, it will also display NG screen.

8-5-2 Screen Transitions

The screen transition of the LCD Option Board as shown in the following diagram.

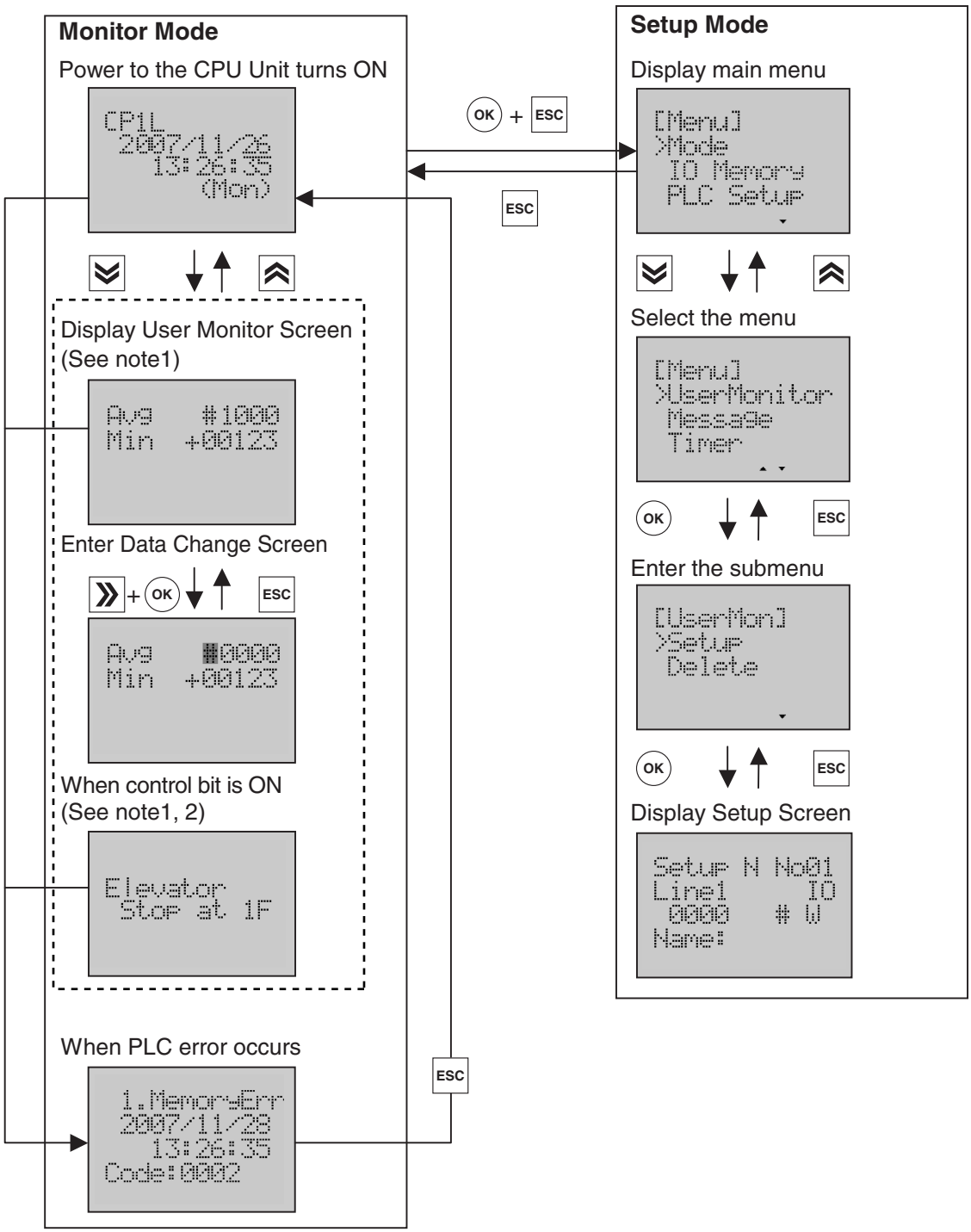

Note

1. The screen will be displayed after making settings in the Setup Mode.
2. The Message Screen will disappeared automatically after control bit is OFF.
3. In the Setup Mode, if there is no operation for 10 minutes, LCD will automatically switch to the Monitor Mode.

Screen Transition Example in the Monitor Mode

In this example, User Monitor Screen 1 and Message Screen 2, Message Screen 6 have been set.

Control bit is OFF

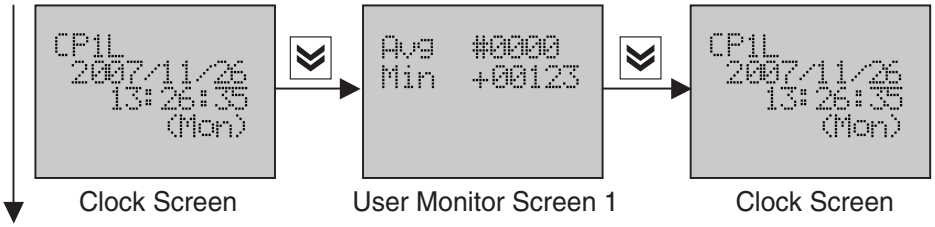

Clock Screen → User Monitor Screen 1 → Clock Screen

Control bit 1 is ON

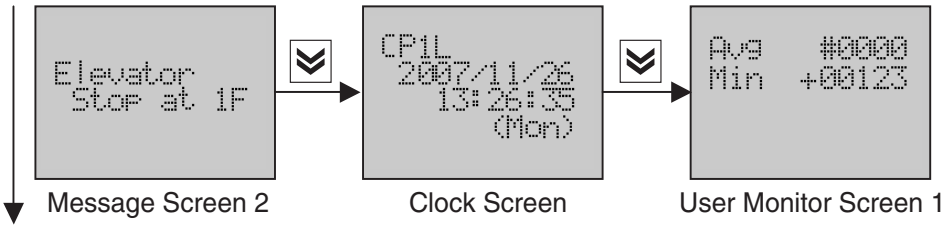

Message Screen 2 → Clock Screen → User Monitor Screen 1

Control bit 5 is ON during control bit 1 ON

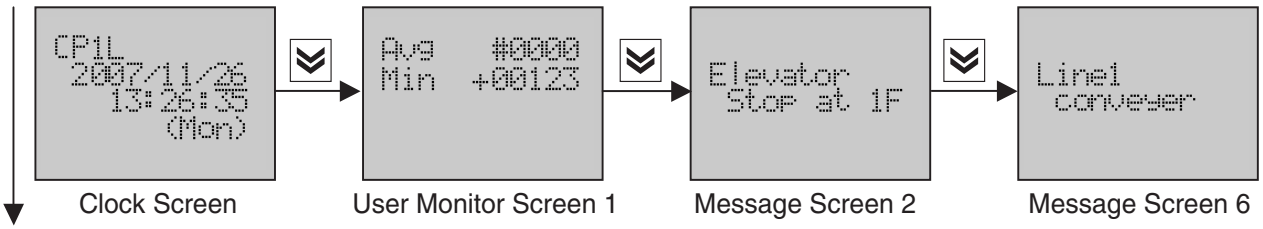

Clock Screen → User Monitor Screen 1 → Message Screen 2 → Message Screen 6

Control bit 1 is OFF

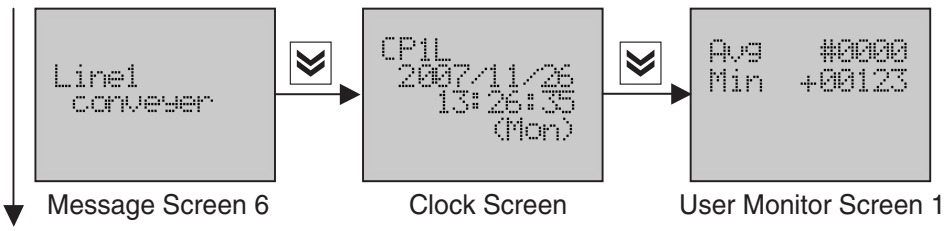

Message Screen 6 → Clock Screen → User Monitor Screen 1

Control bit 1 and bit 5 are ON at the same time

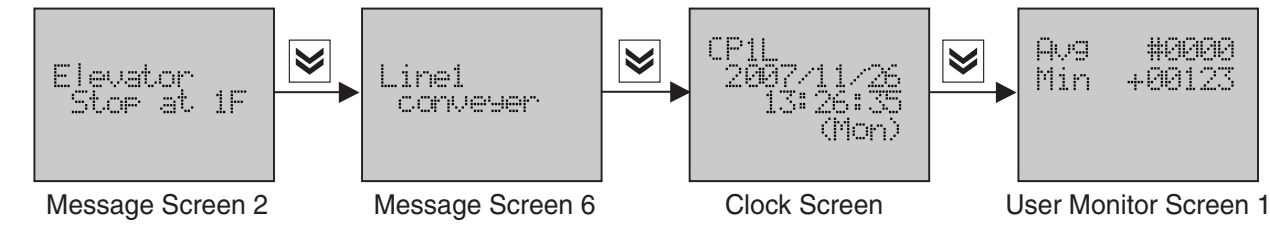

Message Screen 2 → Message Screen 6 → Clock Screen → User Monitor Screen 1

Note

1. When one control bit is ON, the Clock Screen or the User Monitor Screen will switch to the Message Screen automatically.
2. If another control bit is ON when the Clock Screen or the User Monitor Screen is diplayed, the display will switch to another Message Screen.
3. If another control bit is ON when one Message Screen is diplayed, the display will not change until one of the control bit is OFF.

4. If another control bit is bigger, the display will swtich to another Message Screen after one of the control bit is OFF. If another control bit is smaller, the display will swtich to the Clock Screen after one of the control bit is OFF.
5. When no less than one control bit are ON at the same time, the Message Screen whose Screen No. is smaller will be displayed.
6. If one control bit is ON during the period that PLC error occurs, the display remains the Error Screen. Even if the error is eliminated, the display will not switch to the Message Screen, but return to the Clock Screen.

8-5-3 Operation Examples

With actual operation examples, the main operation flow of the LCD Option Board as shown below.

Menu Selection

Display the Monitor Screen of I/O memory.

1,2,3...

1. Turn on the power to the CPU Unit. Clock Screen will be displayed.

2. Press the **OK** + **ESC** button simultaneously to switch to the main menu. The line cursor ">" is always displayed on the first line of menu items.

3. Press the **Down** or **Up** button to select the menu item. Move the line cursor to ***IO Memory.***

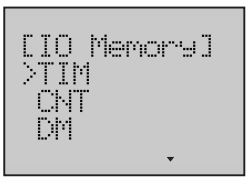

4. Press the **OK** button to enter the submenu.

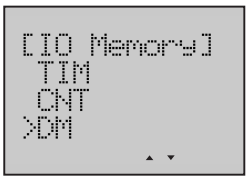

5. Press the **Down** or **Up** button to select the I/O memory type. Move the line cursor to ***DM***.

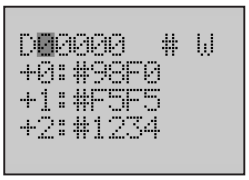

6. Press the **OK** button to enter the Monitor Screen of I/O memory.

Displaying I/O Memory

Display any data of I/O memory. In this example, two word data on D10001 to D10002, D10003 to D10004 with unsigned decimal number will be displayed.

1,2,3...

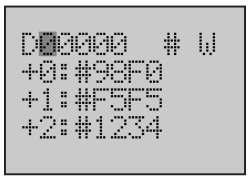

1. Line 1 will display the default address D00000 in I/O memory, Line 2 to 4 will display one word data on D00000, D00001, D00002 with hex number when entering the Monitor Screen of I/O memory.
   The first digit of memory address "0" will flash. The column cursor is at the flashing position.
   The digit under the column cursor can be changed, otherwise it is read only.

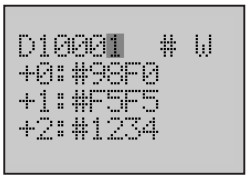

2. Use the **Forward** button to move the column cursor to the digit to be set.
   Use the **Down** or **Up** button to change the value of each digit.
   The screen display will be updated immediately after the address is changed.

3. Use the **Forward** button to move the column cursor to another parameter to be set.
   Use the **Down** or **Up** button to select the value of parameter.
   The screen display will be updated immediately after the parameter is changed.

Changing I/O Memory

Change any data of I/O memory. In this example, the data of I/O memory on D10001 will be changed.

1,2,3...

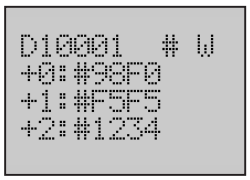

1. Display I/O memory.

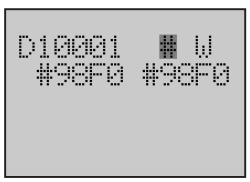

2. Press the **OK** button to enter the Change Screen of I/O memory.
   The column cursor is at the "#" position.
   Use the **Down** or **Up** button to select the value of parameter.

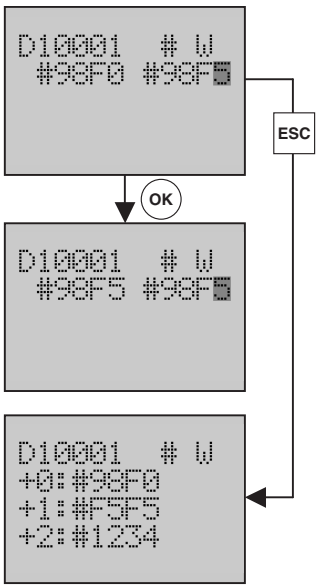

3. Use the **Forward** button to move the column cursor to the data of I/O memory. Use the **Down** or **Up** button to change the value of each digit.

4. Press the **OK** button to save the setting.
   Press the **ESC** button to return to the previous screen.
   The data displayed in the Monitor Screen will be changed.

   Press the **ESC** button to cancel the setting and return to the previous screen.

8-6 LCD Option Board Function

This section describes the functions of the LCD Option Board including how to monitor and make settings for the PLC.

8-6-1 Function Overview

PLC Mode

Display the present PLC mode and change the PLC mode.

Refer to *Page 504* for details.

I/O Memory Setting

Monitor and change the data of I/O Memory.

Refer to *Page 505* for details.

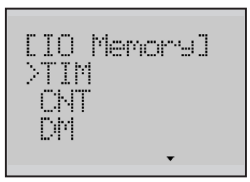

PLC Setup

Monitor and change the PLC Setup, especially fast access the CPU Unit Operating Mode.

Refer to *Page 510* for details.

Analog

Monitor the value from the analog adjuster and external analog setting input of the PLC.

Refer to *Page 512* for details.

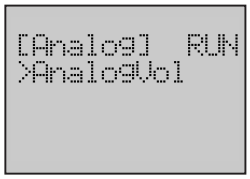

Error History

Display the list of error history and the details of each error. It is possible to display up to 20 screens. User can also monitor the occurring errors.

Refer to *Page 514* for details.

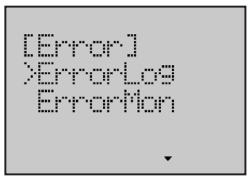

Memory Cassette

The LCD Option Board can execute any of the following operations.

- Load data from memory cassette to PLC.
- Save data from PLC to memory cassette.
- Compare data between PLC and memory cassette.
- Clear data in memory cassette.

Refer to *Page 516* for details.

User Monitor Screen

Set or delete User Monitor Screen, which includes some elements such as I/O word memory, bit memory or text string. It is possible to register up to 16 screens. User can monitor his necessory data in the User Monitor Screen.

Refer to *Page 520* for details.

Message Screen

Set or delete Message Screen. It is possible to register up to 16 screens. User can monitor the text message in the Message Screen when control bit is ON.

Refer to *Page 529* for details.

Timer Switch

Set day, weekly and calendar timers. It is possible to register up to 16 timers for each kind. Each timer can execute a trans-day, trans-week or trans-year operation.

Refer to *Page 534* for details.

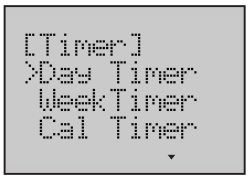

Data Backup

The LCD Option Board can execute any of the following operations.

- Load user settings from DM area.
- Save user settings to DM area.

So user can save the user settings to the DM area of the PLC from one LCD Option Board and load to other LCD Option Boards from the DM area.

Refer to *Page 540* for details.

Language

Change the language of the LCD display between English and Japanese.

Refer to page *543* for details.

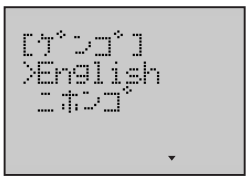

Other

- PLC Cycle Time
- PLC Clock Setting
- PLC System Information
- LCD Backlight Setting
- LCD Contrast Setting
- LCD Factory Setting

Refer to *Page 545 to 548* for details.

8-6-2 PLC Mode

This function can display the present PLC mode and change the PLC mode.

Example Change the PLC Mode from RUN to PRG.

1,2,3...

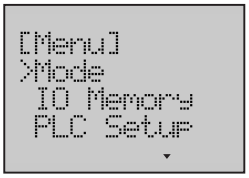

1. Switch to the Setup Mode.

2. Press the **OK** button to enter the Mode Screen.
   There is a choice of 3 PLC modes-RUN/MON/PRG.
   The line cursor will point to the present PLC mode.
   The present mode is ***RUN***.

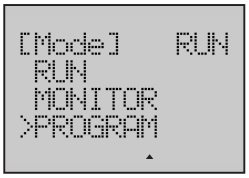

3. Press the **Down** button to select ***PROGRAM***.

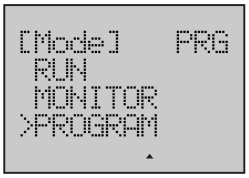

4. Press the **OK** button, then LCD will update the present mode to ***PRG***.

8-6-3 I/O Memory Setting

Displaying I/O Memory

Example Monitor two word data on D10001 to D10002, D10003 to D10004 with unsigned decimal number.

1,2,3...

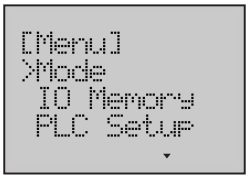

1. Switch to the Setup Mode.

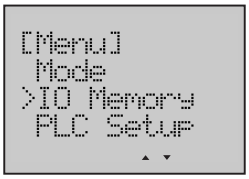

2. Press the **Down** button to select ***IO Memory***.

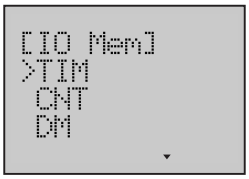

3. Press the **OK** button to enter the I/O Memory menu.

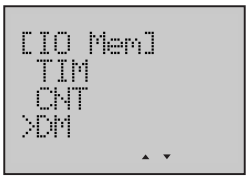

4. Press the **Down** button to select ***DM***.

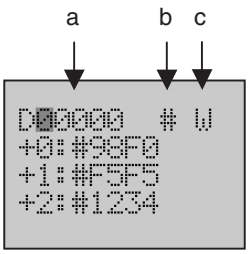

5. Press the **OK** button to enter the Monitor Screen of I/O memory DM. The following table shows the setting items.

No.	Description
a	Leading word address
b	Display format
c	Data length

The first digit of the leading word address will be flashing.

The present setting is the default address.

Line 2 to 4 will display one word data on D00000, D00001, D00002 with hex number.

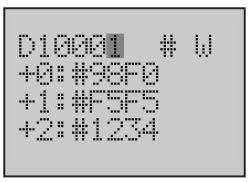

6. Use the **Forward** button to move the column cursor to the digit to be set. Use the **Up** button to change the leading word address to ***10001***.

The following table shows the default address and the setting range for each I/O memory type.

I/O memory type	Default address	Range
TIM	0000	0000 to 4095
CNT	0000	0000 to 4095
DM	00000	00000 to 32767
AR	000	000 to 959
IO	0000	0000 to 6143
WR	000	000 to 511
HR	000	000 to 511
DR	00	00 to 15
IR	00	00 to 15
TK	00	00 to 31

Note LongWord has only five display types, DM, IO, WR, HR and AR.

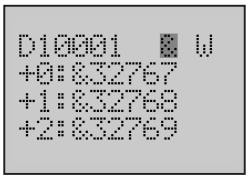

7. Use the **Forward** button to move the column cursor to the display format position.
Press the **Down** or **Up** button to select the display format ***&***.
Select the display format in the following table.

Display format	Meaning
#	Hex number
+	Signed decimal number
&	Unsigned decimal number

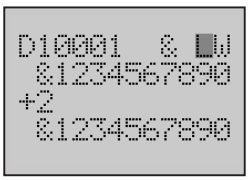

8. Use the **Forward** button to move the column cursor to the data length position.
Press the **Down** or **Up** button to select the data length ***LW***.
Select the data length in the following table.

Data length	Meaning
W	One word data
LW	Two word data

Then it will display two word data on D10001 to D10002, D10003 to D10004 with unsigned decimal number.

Note The screen display will be updated immediately after the address, display format or data length is changed.

Changing I/O Memory

Example First change two word data on W000 to 12345678, then change one word data on W509 to 98F5 and set the control bit 509.05 to OFF.

1,2,3...

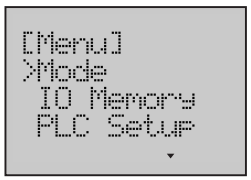

1. Switch to the Setup Mode.

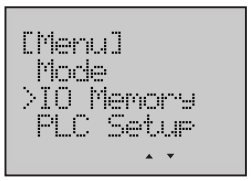

2. Press the **Down** button to select ***IO Memory***.

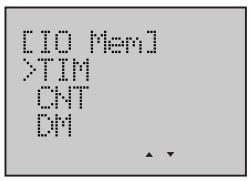

3. Press the **OK** button to enter the I/O Memory menu.

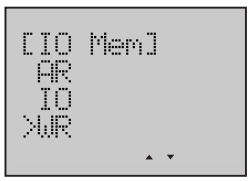

4. Press the **Down** button to select ***WR***.

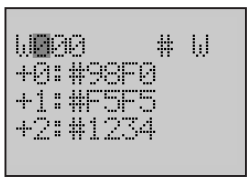

5. Press the **OK** button to enter the Monitor Screen of I/O memory WR.

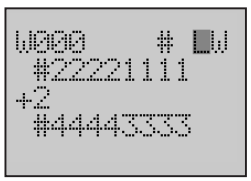

6. Use the **Forward** button to move the column cursor to the data length position.
   Press the **Down** or **Up** button to select the data length ***LW***.

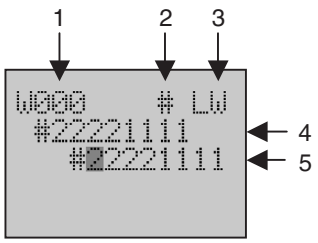

7. Press the **OK** button to enter the Change Screen of I/O memory W000.
   The following table shows the setting items.

No.	Attributes
1	Head channel address (Read only)
2	Display format (Read only)
3	Data length (Read only)
4	Data of I/O memory before change (Read only)
5	Data of I/O memory after change

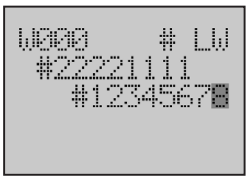

8. Press the **Forward** button to move the column cursor to the digit to be set. Use the **Down** or **Up** button to change the data to ***12345678***.

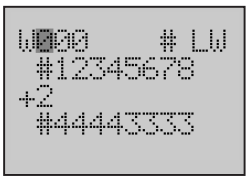

9. Press the **OK** button to save the setting.
Press the **ESC** button to return to the previous screen.
Then the data on W000 displayed in the Monitor Screen will be 12345678.

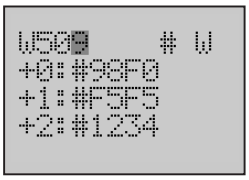

10. Change the leading word address to ***509*** to update the screen display.

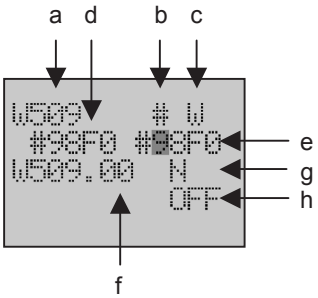

11. Press the **OK** button to enter the Change Screen of I/O memory W509.
The following table shows the setting items.

No.	Description
a	Leading word address(Read only)
b	Display format(Read only)
c	Data length(Read only)
d	Data of I/O memory before change (Read only)
e	Data of I/O memory after change
f	Bit address
g	Bit flag
h	Bit state

Note If the display format is a decimal number (& or +), or the data length is a LongWord, user cannot make a setting for bit.

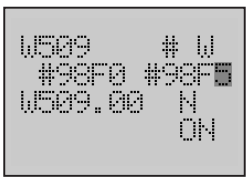

12. Move the column cursor to the digit to be set.
Use the **Up** button to change the data to ***98F5***.

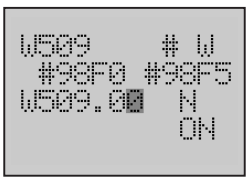

13. Use the **Forward** button to move the column cursor to the position of bit address.
The present setting is the default address. The range is 00~15.

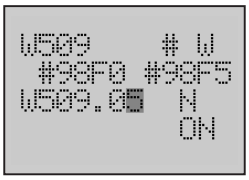

14. Use the **Up** button to change the bit address to ***05***.

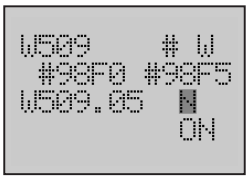

15. Use the **Forward** button to move the column cursor to the bit flag position.
    The present setting is the default setting.
    Select the bit flag in the following table.

Bit flag	Meaning
N	Normal
S	Force to SET
R	Force to RESET

16. Use the **Forward** button to move the column cursor to the bit state position.
    The present state is ON. The state ON or OFF is according to PLC.

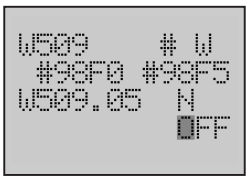

17. Press the **Down** or **Up** button to select the bit state ***OFF***.

Note If bit flag is S or R, the setting of bit state is invalid.

18. Press the **OK** button to save the setting.
    Press the **ESC** button to return to the previous screen.
    Then the data on W509 displayed in the Monitor Screen will be 98D5.

8-6-4 PLC Setup

This function can display and change the settings in the PLC Setup.

Example 1 Change the CPU Unit Operating Mode from PRG to RUN.

1,2,3...

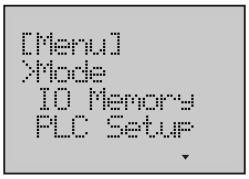

1. Switch to the Setup Mode.

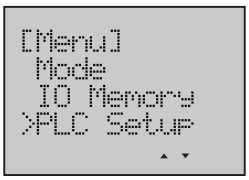

2. Press the **Down** button to select **PLC Setup**.

3. Press the **OK** button to enter the PLC Setup menu.

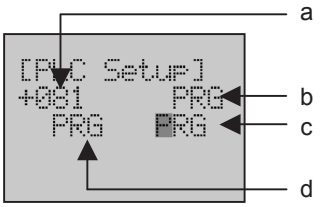

4. Press the **OK** button to enter the CPU Unit Operating Mode Screen.
The following table shows the setting items.

No.	Attributes
a	Address of CPU Unit Operating Mode (Read only)
b	Present PLC mode (Read only)
c	CPU Unit Operating Mode after change (Read only when PLC mode is RUN or MON)
d	CPU Unit Operating Mode before change (Read only)

The address of CPU Unit Operating Mode is always 081, so there is no need to change the address.

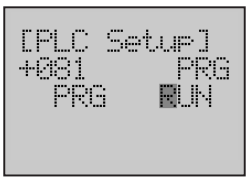

5. Use the **Up** button to select **RUN**.

Note Before changing the CPU Unit Operating Mode, make sure that the present PLC mode is PRG. If PLC is in RUN or MON mode, the CPU Unit Operating Mode is unchangeable.

6. Press the **OK** button to save the setting.

7. Press the **ESC** or **OK** button to return to the previous menu.

Example 2 Display the value of PLC Setup on 080. Then change the value to 0195.

1,2,3...

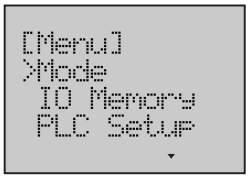

1. Switch to the Setup Mode.

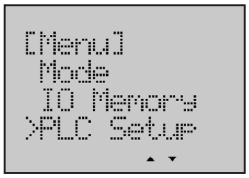

2. Press the **Down** button to select ***PLC Setup***.

3. Press the **OK** button to enter the PLC Setup menu.

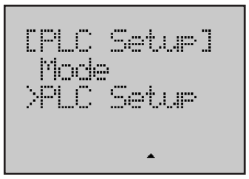

4. Press the **Down** button to select **PLC Setup**.

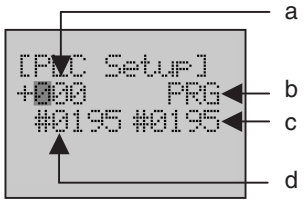

5. Press the **OK** button to enter the PLC Setup Screen
The following table shows the setting items.

No.	Description
a	Address of PLC Setup
b	PLC mode (Read only)
c	Value of PLC Setup after change (Read only when PLC mode is RUN or MON)
d	Value of PLC Setup before change (Read only)

The first digit of PLC Setup address will be flashing. The range of the address is 000 to 511.

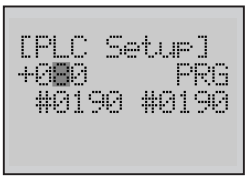

6. Use the **Up** button to change the address to ***080***.
After the address is changed, the value of PLC Setup will be updated immediately.

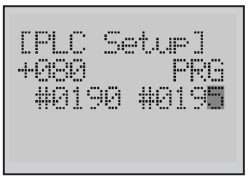

7. Use the **Forward** button to move the column cursor to the value of PLC Setup.
Use the **Up** button to change the value to ***0195***.

Note Before changing the value of PLC Setup, make sure that the PLC mode is PRG. If PLC is in RUN or MON mode, the value is unchangeable.

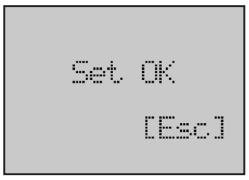

8. Press the **OK** button to save the setting.

9. Press the **ESC** or **OK** button to return to the PLC Setup Screen.

8-6-5 Analog

Displaying Analog Settings

Example Monitor the external analog setting input with unsigned decimal number.

1,2,3...

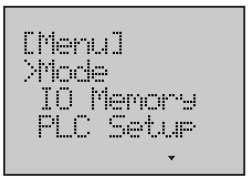

1. Switch to the Setup Mode.

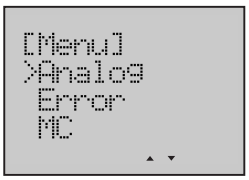

2. Press the **Down** button to select Analog.

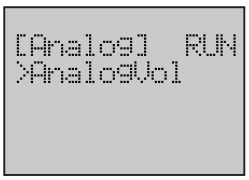

3. Press the **OK** button to enter the Analog menu.

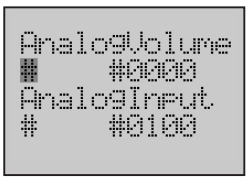

4. Press the **OK** button to enter the Monitor Screen of analog setting.
   Line 2 will display the value from the analog adjuster.
   Line 4 will display the external analog setting input value.
   The display format on line 2 will be flashing.

5. Use the **Forward** button to move the column cursor to the display format position on line 4.

6. Press the **Down** or **Up** button to change the display format to ***&***.

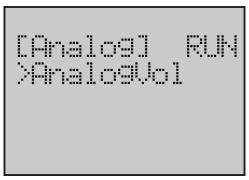

7. Press the **ESC** button to return to the previous screen.

8-6-6 Error

This function can display the list of error history and the details of each error. It is possible to display up to 20 screens. User can also monitor the occurring errors in the Error Monitor Screen.

Displaying and Clearing Error History

Example Display the list of error history and then clear it.

1,2,3...

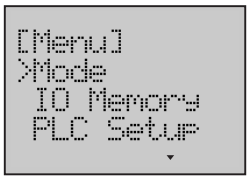

1. Switch to the Setup Mode.

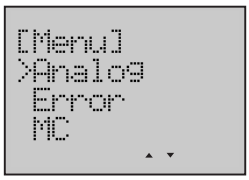

2. Press the **Down** button to select ***Error***.

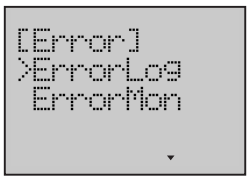

3. Press the **OK** button to enter the Error menu.

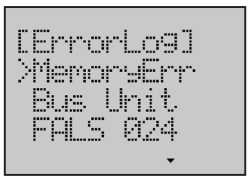

4. Press the **OK** button to enter the Error History Screen.
Error history will be displayed in this screen.

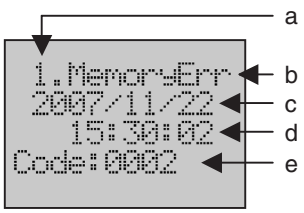

5. Press the **OK** button to enter the Error Screen details.
The following table shows the display items.

No.	Description
a	Error number(1 to 20)
b	Error type
c	The date error occurred
d	The time error occurred
e	Error code

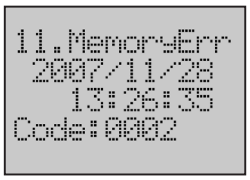

6. If there is more than one error, press the **Down** button to scroll the screen and display the details of the next error.

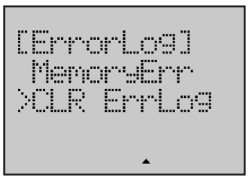

7. Press the **ESC** button to return to the Error History Screen.
Press the **Down** button to select ***CLR ErrLog*** which is always below the last error.

8. Press the **OK** button to enter the Error Clear Screen.

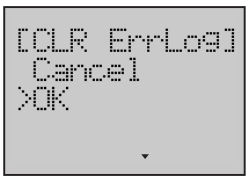

9. Press the **Down** button to select **OK**.

Note Selecting ***Cancel*** will result in a return to the previous screen.

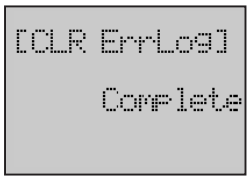

10. Press the **OK** button to clear the error history.
When the clearing is finished, it will display a complete screen.

11. Press the **ESC** button to return to the Error History Screen.
All the errors have been cleared.

Clearing Occurring Error List

Example Clear memory error in the list that occurs at the present time.

1,2,3...

1. Switch to the Setup Mode.

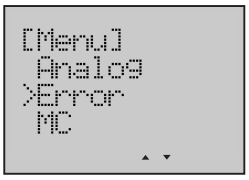

2. Press the **Down** button to select ***Error***.

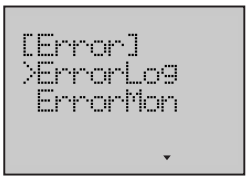

3. Press the **OK** button to enter the Error menu.

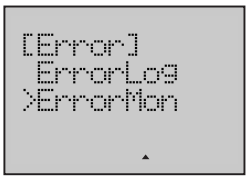

4. Press the **Down** button to select ***ErrorMon***.

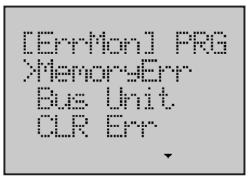

5. Press the **OK** button to enter the Error Monitor Screen.
   Max. 2 errors that occur the earliest will be displayed.

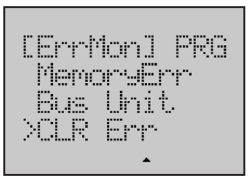

6. Press the **Down** button to select ***CLR Err***.

7. Press the **OK** button to enter the Error Clear Screen.

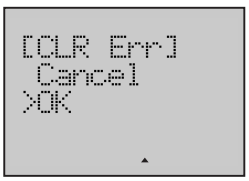

8. Press the **Down** button to select **OK**.

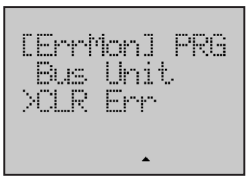

9. Press the **OK** button to clear the memory error in the list.

Note Only one error that occurs the earliest in the list will be cleared one time.

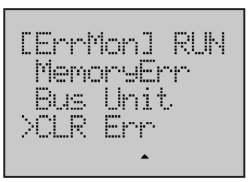

10. If the memory error itself has not been eliminated, when the Error Monitor Screen is updated, the error will be displayed again in the screen.

8-6-7 Memory Cassette

Before Operation

- Memory Cassette should be equipped into the PLC. Otherwise LCD cannot operate Memory Cassette.
- Make sure that the PLC mode is PRG. If the PLC is in RUN or MON mode, the operation of Memory Cassette cannot be executed.

Loading Data from Memory Cassette to PLC

Example Load data from Memory Cassette to the PLC.

1,2,3...

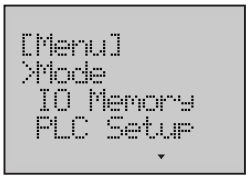

1. Switch to the Setup Mode.

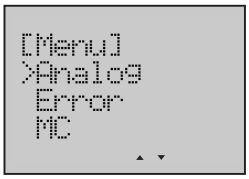

2. Press the **Down** button to select ***MC***.

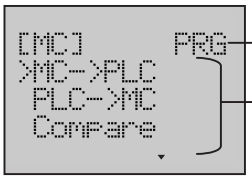

3. Press the **OK** button to enter the Memory Cassette menu.
The following table shows the setting items.

No.	Description
a	PLC mode (Read only)
b	Operation mode

Select the operation mode in the following table.

Operation Mode	Meaning
MC->PLC	Load data from memory cassette to PLC
PLC->MC	Save data from PLC to memory cassette
Compare	Compare data between PLC and MC
Clear	Format memory cassette

4. Press the **OK** button to enter the "MC->PLC" Operation Screen.

5. Press the **Down** button to select ***OK***.

Note Selecting ***Cancel*** will result in a return to the previous menu.

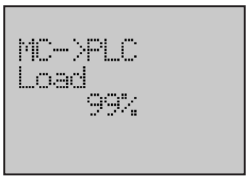

6. Press the **OK** button to start loading.
   A rate of loading will be displayed in the screen.

7. When the rate comes up to 0%, the loading is finished. Then it will display a complete screen.

Saving Data from PLC to Memory Cassette

Example Save data from the PLC to Memory Cassette.

1,2,3...

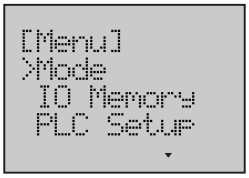

1. Switch to the Setup Mode.

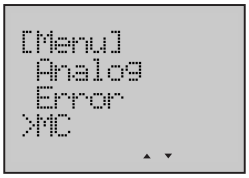

2. Press the **Down** button to select ***MC***.

3. Press the **OK** button to enter the Memory Cassette menu.

4. Press the **Down** button to select ***PLC->MC***.

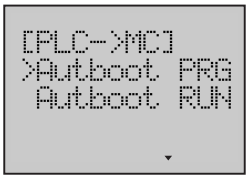

5. Press the **[OK]** button to enter the "PLC->MC" menu.
   Select the saving mode in the following table.

Saving Mode	Meaning
Autoboot PRG	If the power turns ON, the operation cannot be executed.
Autoboot RUN	Even if the power turns ON, the operation can be executed.

6. Press the **OK** button to enter the "PLC->MC" Operation Screen.

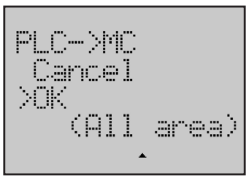

7. Press the **Down** button to select **OK**.

Note Selecting ***Cancel*** will result in a return to the previous menu.

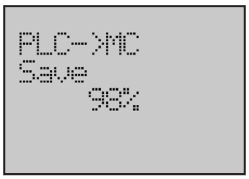

8. Press the **OK** button to start saving.
A rate of saving will be displayed in the screen.

9. When the rate comes up to 0%, the saving is finished. Then it will display a complete screen.

Comparing Data between PLC and MC

Example Compare the data between the PLC and Memory Cassette.

1,2,3...

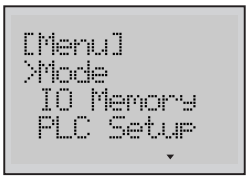

1. Switch to the Setup Mode.

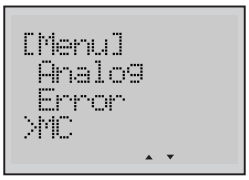

2. Press the **Down** button to select ***MC***.

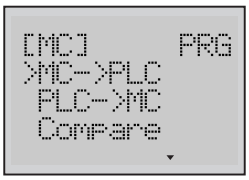

3. Press the **OK** button to enter the Memory Cassette Screen.

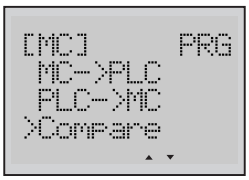

4. Press the **Down** button to select ***Compare***.

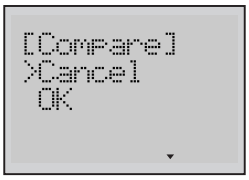

5. Press the **OK** button to enter the Compare Operation Screen.

6. Press the **Down** button to select ***OK***.

Note Selecting ***Cancel*** will result in a return to the previous menu.

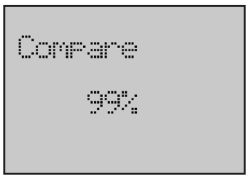

7. Press the **OK** button to start comparing.
   A rate of comparison will be displayed in the screen.

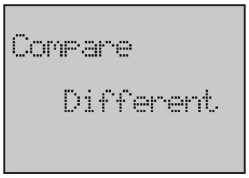

8. When the rate comes up to 0%, the comparing is finished. Then it will display a result of comparison.

Clearing Memory Cassette

Example Clear the data in Memory Cassette.

1,2,3...

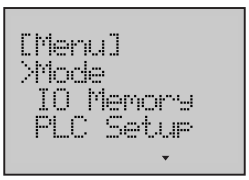

1. Switch to the Setup Mode.

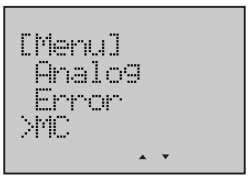

2. Press the **Down** button to select ***MC***.

3. Press the **OK** button to enter the Memory Cassette menu.

4. Press the **Down** button to select ***Clear***.

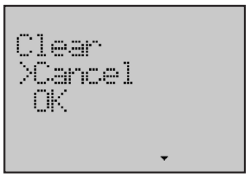

5. Press the **OK** button to enter the Clear Operation Screen.

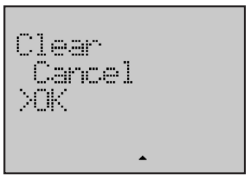

6. Press the **Down** button to select ***OK***.

Note Selecting ***Cancel*** will result in a return to the previous menu.

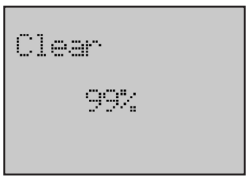

7. Press the ***OK*** button to start clearing.
   A rate of clearance will be displayed in the screen.

8. When the rate comes up to 0%, the clearing is finished. Then it will display a complete screen.

8-6-8 User Monitor Screen

This function can set or delete User Monitor Screen. It is possible to register up to 16 screens. User can monitor his necessary data in the User Monitor Screen. Each User Monitor Screen includes 4 lines of content. Each line has three kinds of display type including word memory, bit memory and text string.

Creating New User Monitor Screen

Example 1 Monitor one word data on the word address D09000 with unsigned decimal number through User Monitor Screen 2, displayed on Line 1.

1,2,3...

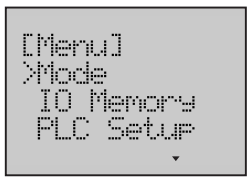

1. Switch to the Setup Mode.

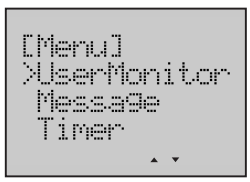

2. Press the **Down** button to select ***UserMonitor***.

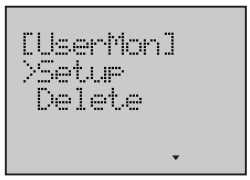

3. Press the **OK** button to enter the User Monitor menu.

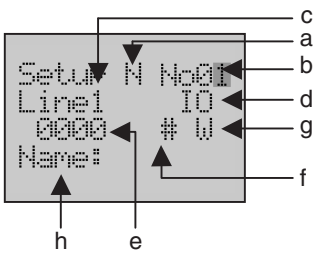

4. Press the **OK** button to enter the User Monitor Setup Screen.
   The final digit of the Screen No. will be flashing.
   The following table shows the setting items for each display type.

No.	Description	Display type		
		Word	Bit	Text string
a	Monitor flag	Yes	Yes	Yes
b	User Monitor Screen No. (01 to 16)	Yes	Yes	Yes
c	Line No. (1 to 4) of the User Monitor Screen	Yes	Yes	Yes
d	Display type	Yes	Yes	Yes
e	I/O memory address	Yes	Yes	No
f	Display format	Yes	No	No
g	Date length	Yes	No	No
h	I/O memory name	Yes	Yes	Yes

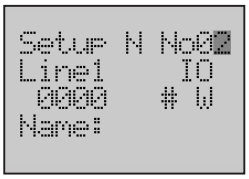

5. Use the **Up** button to change the Screen No. to ***2***.

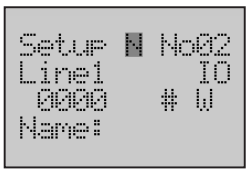

6. Use the **Forward** button to move the column cursor to the monitor flag position.
   Select the monitor flag in the following table.

Monitor flag	Meaning
Y	User Monitor Screen in use
N	User Monitor Screen not in use

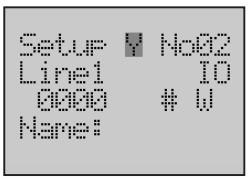

7. Press the **Up** button to select the monitor flag ***Y***.
   Then user can monitor this screen after the setting is complete.

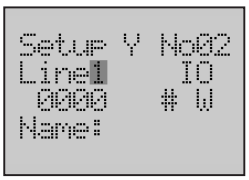

8. Use the **Forward** button to move the column cursor to the Line No. position.
   The present setting is Line ***1***.

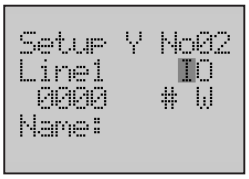

9. Use the **Forward** button to move the column cursor to the display type position.
   The following table shows the display types which can be selected, including the default address and the setting range for each type.

Display type		Default address	Range
Word	IO	0000	0000 to 6143
	WR	000	000 to 511
	HR	000	000 to 511
	AR	000	000 to 959
	TIM	0000	0000 to 4095
	CNT	0000	0000 to 4095
	DM	00000	00000 to 32767
	DR	00	00 to 15
	IR	00	00 to 15
	TK	00	00 to 31
	TMF(Timer flag)	0000	0000 to 4095
	CTF(Timer flag)	0000	0000 to 4095
Bit	IOB	0000.00	0000.00 to 6143.15
	WRB	000.00	000.00 to 511.15
	HRB	000.00	000.00 to 511.15
	ARB	000.00	000.00 to 959.15
Text string	STR	-	-

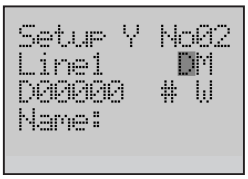

10. Press the **Up** button to select ***DM***.

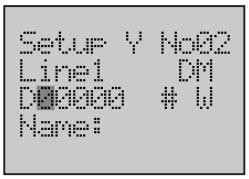

11. Use the **Forward** button to move the column cursor to the memory address position.
The present setting is the default address.

12. Move the column cursor to the digit to be set.
Use the **Up** button to change the memory address to ***09000***.

13. Use the **Forward** button to move the column cursor to the display format position.
Select the display format in the following table.

Display format	Meaning
#	Hex number
+	Signed decimal number
&	Unsigned decimal number

14. Press the **Down** or **Up** button to select the display format ***&***.

15. Use the **Forward** button to move the column cursor to the data length position. The present setting is ***W***.
Select the data length in the following table.

Data length	Meaning
W	One word data
LW	Two word data

16. Use the **Forward** button to move the column cursor to the position of Name.

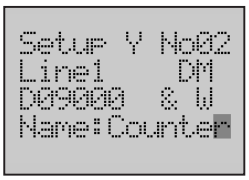

17. Use the **Down** or **Up** button to select the character of each digit.
Name the word to ***Counter***.

Note
1. When selecting the character of the next digit, the leading character will be the character of the digit before.
2. The max length of word or bit name is 7 characters.

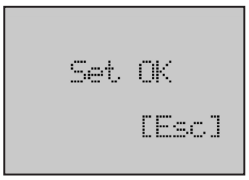

18. Press the **OK** button to save the setting.

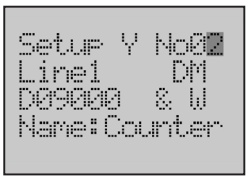

19. Press the **ESC** or **OK** button to return to the User Monitor Setup Screen.

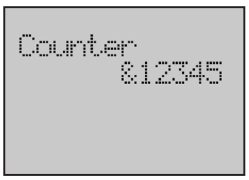

20. Press the **ESC** button three times to return to the Monitor Mode.
Switch to the User Monitor Screen 2 with the **Down** button.

Note
1. Setting of word or bit name is not necessary. The default name is NULL, and the memory address will be displayed at the name position in the User Monitor Screen.
2. One line setting will take 1 or 2 lines of space. If word or bit name length is more than 5 characters or data length is a LongWord, it will take 2 lines of space.
3. One screen only has 4 lines of space available. If one line setting has already taken 2 lines of space, the next line setting will be invalid. If the setting of line 4 takes 2 lines of space, its setting will be invalid.

Example 2 Display a text string "elevator" on the User Monitor Screen 2, Line 4, after the setting in example 1.

1,2,3...

1. Switch to the Setup Mode.

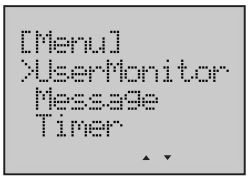

2. Press the **Down** button to select ***UserMonitor***.

3. Press the **OK** button to enter the User Monitor menu.

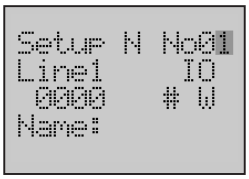

4. Press the **OK** button to enter the User Monitor Setup Screen.

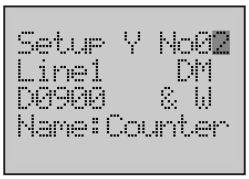

5. Use the **Up** button to change the Screen No. to ***2***.
The setting in example 1 will be displayed.

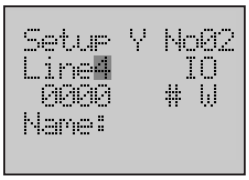

6. Use the **Forward** button to move the column cursor to the Line No. position.
Use the **Up** button to change the Line No. to ***4***.

7. Use the **Forward** button to move the column cursor to the display type position.
Press the **Up** button to select ***STR***.

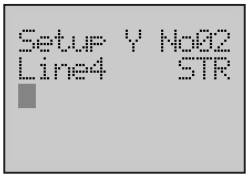

8. Use the **Forward** button to move the column cursor to the position of String Name.

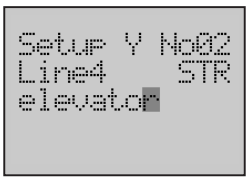

9. Use the **Down** or **Up** button to select the character of each digit. Name the text string to ***elevator***.

10. Press the **OK** button to save the setting.

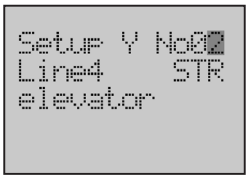

11. Press the **ESC** or **OK** button to return to the User Monitor Setup Screen.

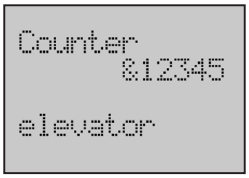

12. Press the **ESC** button three times to return to the Monitor Mode. Switch to the User Monitor Screen 2.

Note
1. The default text string is NULL.
2. The max length of text string is 12 characters.

Changing User Monitor Screen

User can not only change the date displayed in the User Monitor Screen in the Setup Mode, but also in the Monitor Mode.

Example 1 Change the average to 0100 and the minimum to -00123.

1,2,3...

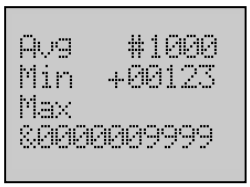

1. Display the User Monitor Screen.

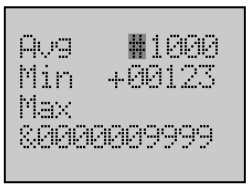

2. Press the **Forward + OK** button simultaneously to enter the Data Change Screen.
The column cursor will be flashing on the digit before the value.

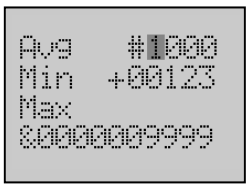

3. Use the **Forward** button to move the column cursor to the digit to be set.

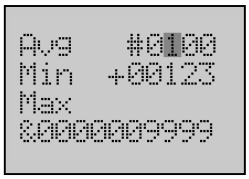

4. Use the **Up** button to change the value to ***0100***.

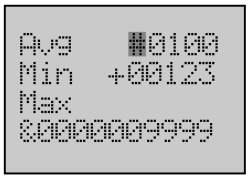

5. Press the **OK** button to save the setting.
   The column cursor will return to the digit before the value.

6. Use the **Down** button to move the cursor to line 2.

Note Only when the cursor is on the digit before the value, press the **Down** or **Up** button to b move the cursor to other lines.

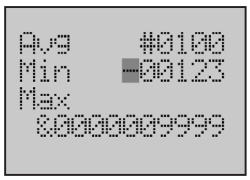

7. Use the **Forward** button to move the column cursor to the sign position.
   Press the **Down** or **Up** button to change the sign to **-**.

8. Press the **OK** button to save the setting.
   If the setting is invalid, the screen display will have no change.

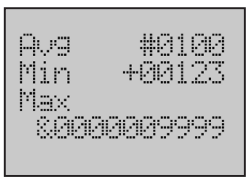

9. Press the **ESC** button to return to the User Monitor Screen.
   The average has been changed to 0100, but the minimum is still +00123.

Example 2 Change bit0 from OFF to ON.

1,2,3...

1. Press the **Forward + OK** button simultaneously to enter the Data Change Screen.

2. Use the **Down** button to move the cursor to line 2.

3. Use the **Forward** button to move the column cursor to the bit state position.

4. Press the **Down** or **Up** button to change the bit state to ***ON***.

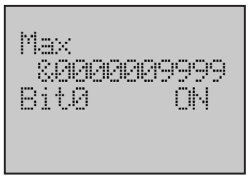

5. Press the **OK** button to save the setting.
   Press the **ESC** button to return to the User Monitor Screen.

Deleting User Monitor Screen

Example Delete the User Monitor Screen 2.

1,2,3...

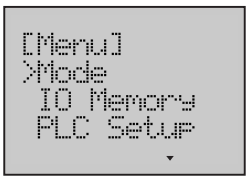

1. Switch to the Setup Mode.

2. Press the **Down** button to select ***UserMonitor***.

3. Press the **OK** button to enter the User Monitor menu.

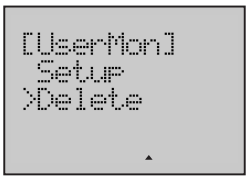

4. Press the **Down** button to select ***Delete***.

5. Press the **OK** button to enter the User Monitor Delete Screen.
   The final digit of the Screen No. will be flashing.

6. Use the **Up** button to change the Screen No. to ***2***.

Note Press and hold the **UP** button until the Screen No. changes to ***ALL***, all the User Monitor Screen will be deleted if the setting is confirmed.

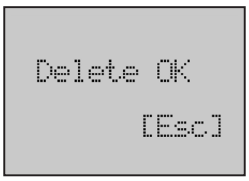

7. Press the **OK** button to delete the screen.

8. Press the **ESC** or **OK** button to return to the previous menu.

8-6-9 Message Screen

This function can set or delete Message Screen. It is possible to register up to 16 screens. User can monitor the text message in the Message Screen when control bit is ON.

Creating New Message Screen

Example When control bit W100.01 is ON, the Message Screen 2 will display the data on the word adress D09040 to D09075.

1,2,3...

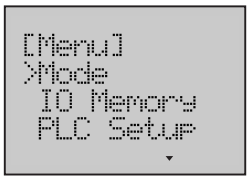

1. Switch to the Setup Mode.

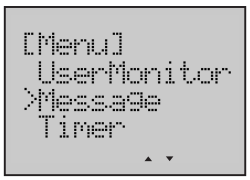

2. Press the **Down** button to select ***Message***.

3. Press the OK button to enter the Message menu.

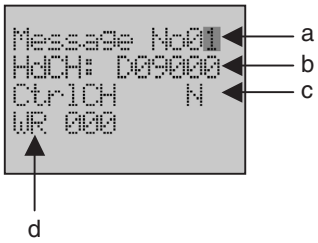

4. Press the **OK** button to enter the Message Setup Screen.
The final digit of the Screen No. will be flashing.
The following table shows the setting items.

No.	Description
a	Message Screen No. (01 to 16)
b	Leading word (Only DM) address
c	Message flag
d	Word (Only WR) address of control bit

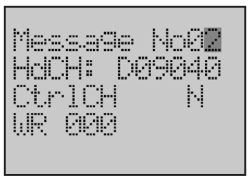

5. Use the **Up** button to change the Screen No. to ***2***.
The following table shows the relation between the Screen No. and the control bit when the word address is W000.

Screen No.	Control bit
01	W000.00
02	W000.01
03	W000.02
04	W000.03
…	…
16	W000.15

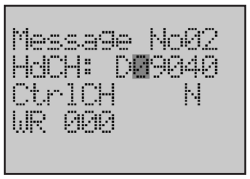

6. Use the **Forward** button to move the column cursor to the position of leading word address.
   The present setting is the default address.
   The following table shows the default address and the setting range for each screen when the leading word address is D09000.

Screen No.	Default address	Range
01	09000 to 09035	00000 to 32732
02	09040 to 09075	
03	09080 to 09115	
04	09120 to 09155	
…	…	
16	09600 to 09635	

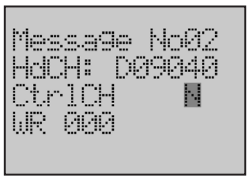

7. Use the **Forward** button to move the column cursor to the message flag position.
   Select the message flag in the following table.

Message flag	Meaning
Y	Message Screen in use
N	Message Screen not in use

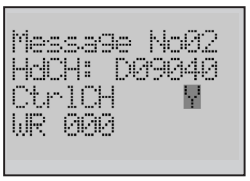

8. Press the **Up** button to select the message flag ***Y***.
   The setting is available for all the screens.

9. Use the **Forward** button to move the column cursor to the position of word address.
   The present setting is the default address. The range of the address is 000 to 511.

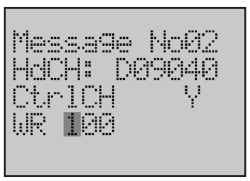

10. Use the **Up** button to change the word address to ***100***.

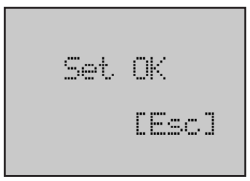

11. Press the **OK** button to save the setting.

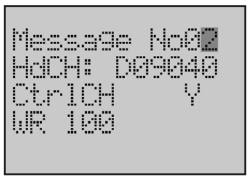

12. Press the **ESC** or **OK** button to return to the Message Setup Screen.

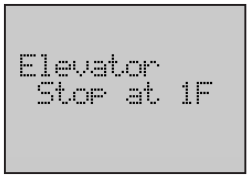

13. Press the **ESC** button three times to return to the Monitor Mode.
    Switch to the Message Screen 2 when control bit W100.01 is ON.

DM Area Settings

The text message is stored in the DM area. One character is 1 byte and one DM word is 2 bytes, so 24 DM words need to be used to store one screen message. But not all of the area can be used.
The following table shows the setting area for each screen when the leading word address is D09000..

Screen No.	Word	0		1		2		3		4		5		6	7	8	9
01	D09000	1	2	3	4	5	6	7	8	9	10	11	12				
	D09010	13	14	15	16	17	18	19	20	21	22	23	24				
	D09020	25	26	27	28	29	30	31	32	33	34	35	36				
	D09030	37	38	39	40	41	42	43	44	45	46	47	48				
02	D09040	1	2	3	4	5	6	7	8	9	10	11	12				
	D09050	13	14	15	16	17	18	19	20	21	22	23	24				
	D09060	25	26	27	28	29	30	31	32	33	34	35	36				
	D09070	37	38	39	40	41	42	43	44	45	46	47	48				
...																	
16	D09600	1	2	3	4	5	6	7	8	9	10	11	12				
	D09610	13	14	15	16	17	18	19	20	21	22	23	24				
	D09620	25	26	27	28	29	30	31	32	33	34	35	36				
	D09630	37	38	39	40	41	42	43	44	45	46	47	48				

Do not use.

In this example, “Elevator Stop at 1F” is displayed on the Message Screen 2.

The data can be set in the DM area with the CX-Programmer.
The settings show as below.

Line No.	Word	Setting	Character	
1	D09040	2020		
	D09041	2020		
	D09042	2020		
	D09043	2020		
	D09044	2020		
	D09045	2020		
2	D09050	456C	E	l
	D09051	6576	e	v
	D09052	6174	a	t
	D09053	6F72	o	r
	D09054	2020		
	D09055	2020		
3	D09060	2053		S
	D09061	746F	t	o
	D09062	7020	p	
	D09063	6174	a	t
	D09064	2031		1
	D09065	4620	F	
4	D09070	2020		
	D09071	2020		
	D09072	2020		
	D09073	2020		
	D09074	2020		
	D09075	2020		

Select the character codes in the following table.

Upper bits / Lower bits	1	2	3	4	5	6	7	8	9	A	B	C	D	E	F
0	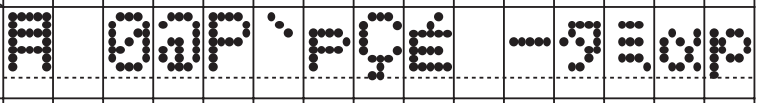														
1	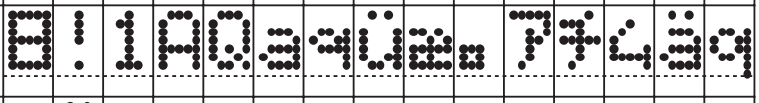														
2	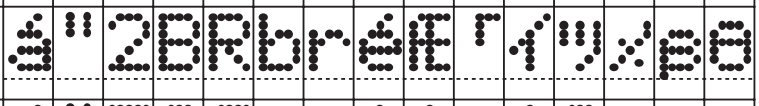														
3	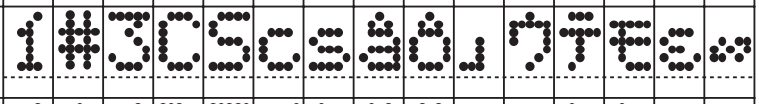														
4	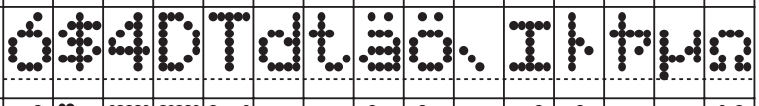														
5	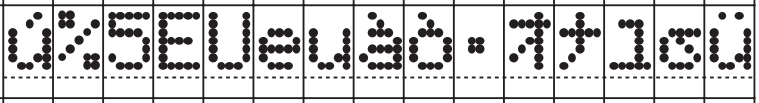														
6	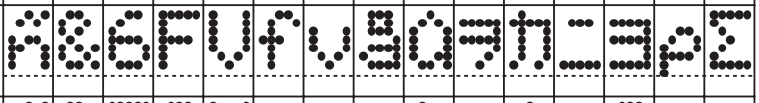														
7	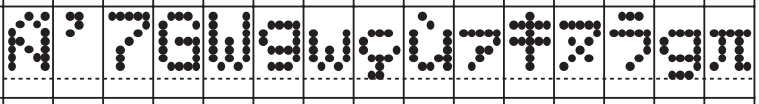														
8	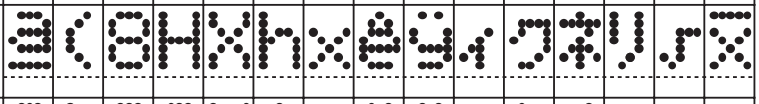														
9	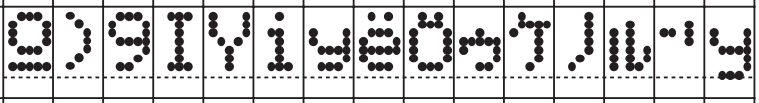														
A	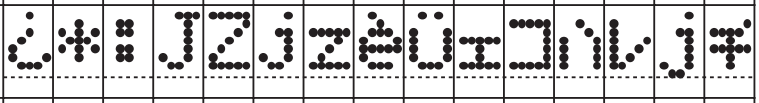														
B	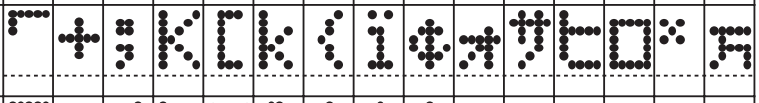														
C	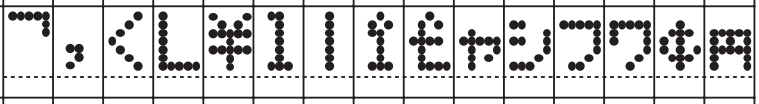														
D	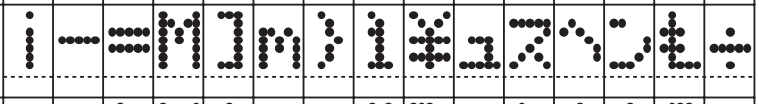														
E	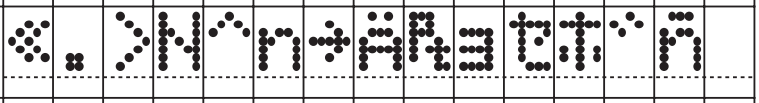														
F	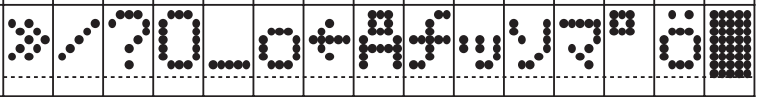														

Deleting Message Screen

Example Delete the Message Screen 1.

1,2,3...

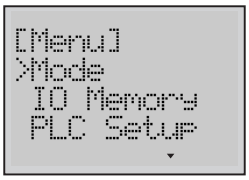

1. Switch to the Setup Mode.

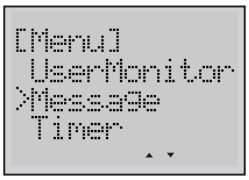

2. Press the **Down** button to select ***Message***.

3. Press the **OK** button to enter the Message menu.

4. Press the **Down** button to select ***Delete***.

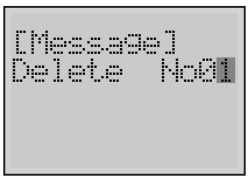

5. Press the **OK** button to enter the Message Delete Screen.
   The present setting is Screen ***01***.

Note Press and hold the **UP** button until the Screen No. changes to ***ALL***, all the User Monitor Screen will be deleted if the setting is confirmed.

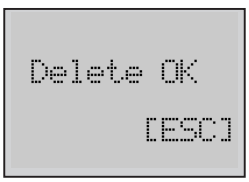

6. Press the **OK** button to delete the screen.

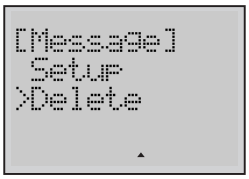

7. Press the **ESC** or **OK** button to return to the previous menu.

8-6-10 Timer Switch

There are 3 kinds of timer, including Day, Weekly and Calendar Timer.
It is possible to register up to 16 timers for each kind.

Type	Description
Day timer	Sometime in a day, set the related control bit to ON.
Weekly timer	Sometime in a week, set the related control bit to ON.
Calendar timer	Sometime in a year, set the related control bit to ON.

Setting Day Timer

Example 8:30 to 17:15 from Monday to Friday, control bit W509.15 is ON.

1,2,3...

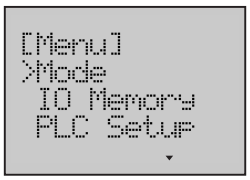

1. Switch to the Setup Mode.

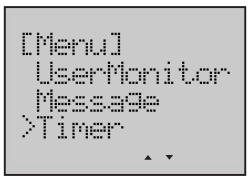

2. Press the **Down** button to select ***Timer***.

3. Press the **OK** button to enter the Timer Switch menu.

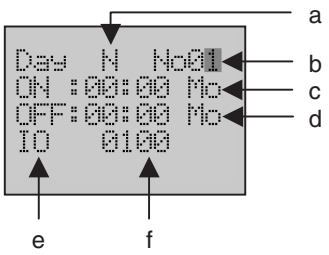

4. Press the **OK** button to enter the Day Timer Screen.
The final digit of the Timer No. will be flashing.
The following table shows the setting items.

No.	Description
a	Timer flag
b	Timer No. (01 to 16)
c	ON time of PLC
d	OFF time of PLC
e	Word type
f	Word address

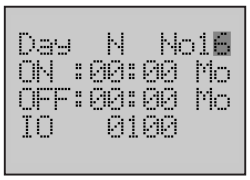

5. Use the **Up** button to change the Timer No. to ***16***.
The following table shows the relation between the Timer No. and the control bit when the word address is W001.

Timer No.	Control bit
01	W001.00
02	W001.01
03	W001.02
04	W001.03
…	…
16	W001.15

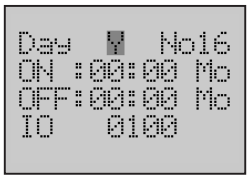

6. Use the **Forward** button to move the column cursor to the timer flag position.
Press the **Up** button to select the timer flag ***Y***.
Select the timer flag in the following table.

Timer flag	Meaning
Y	Timer in use
N	Timer not in use

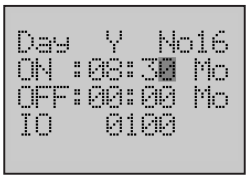

7. Use the **Forward** button to move the column cursor to the ON time position.
Use the **Up** button to change time to ***08:30***.

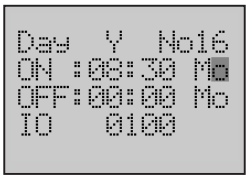

8. Use the **Forward** button to move the column cursor to the ON week position.
The present setting is ***Monday***.

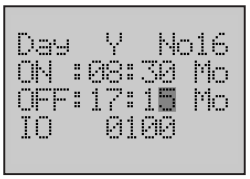

9. Use the **Forward** button to move the column cursor to the OFF time position.
Use the **Up** button to change time to ***17:15***.

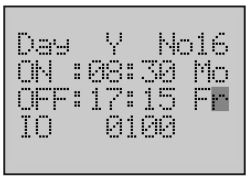

10. Use the **Forward** button to move the column cursor to the OFF week position.
Press the **Down** or **Up** button to select ***Friday***.

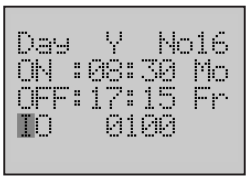

11. Use the **Forward** button to move the column cursor to the position of control bit.

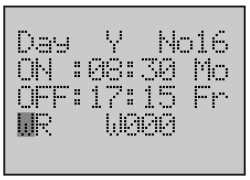

12. Press the **Up** button to select ***WR***.
The following table shows the word type which can be selected, including the default address and the setting range for each type.

Timer	Word	Default address	Range
All	IO	0100	0100 to 6143
Day timer	WR	001	001 to 511
Weekly timer	WR	002	002 to 511
Calender timer	WR	003	003 to 511
All	HR	000	000 to 511
All	AR	448	448 to 959

13. Use the **Forward** button to move the column cursor to the position of word address.
    The present setting is the default address.

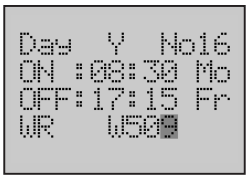

14. Move the column cursor to the digit to be set.
    Use the **Up** button to change the word address to ***509***.

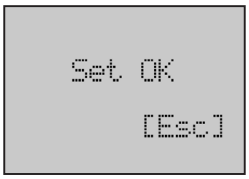

15. Press the **OK** button to save the setting.

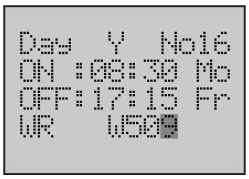

16. Press the **ESC** or **OK** button to return to the Day Timer Screen.

Setting Calendar Timer

Example From 1st June to 1st October, control bit H209.05 is ON.

1,2,3...

1. Switch to the Setup Mode.

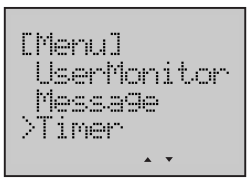

2. Press the **Down** button to select ***Timer***.

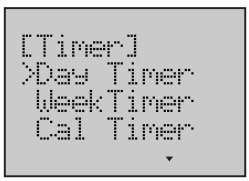

3. Press the **OK** button to enter the Timer menu.

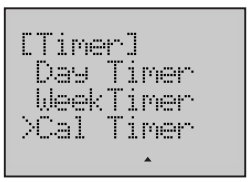

4. Press the **Down** button to select ***Cal Timer***.

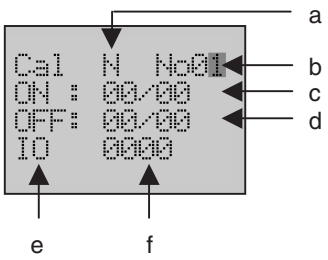

5. Press the **OK** button to enter the Calendar Timer Screen.
   The final digit of the Timer No. will be flashing.
   The following table shows the setting items.

No.	Description
a	Timer flag
b	Timer No. (01 to 16)
c	ON date of PLC
d	OFF date of PLC
e	Word type
f	Word address

6. Use the **Up** button to change the Timer No. to ***6***.

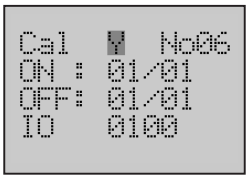

7. Use the **Forward** button to move the column cursor to the timer flag position.
   Press the **Up** button to select the timer flag ***Y***.

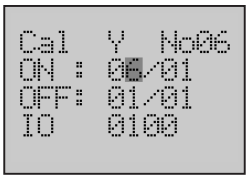

8. Use the **Forward** button to move the column cursor to the ON date position.
   Use the **Up** button to change the date to ***06/01***.

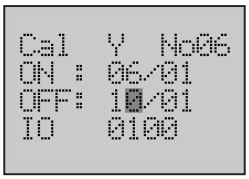

9. Use the **Forward** button to move the column cursor to the OFF date position.
   Use the **Up** button to change the date to ***10/01***.

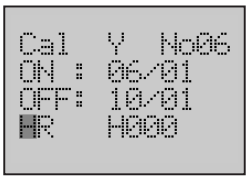

10. Use the **Forward** button to move the column cursor to the position of control bit.
    Press the **Up** button to select ***HR***.

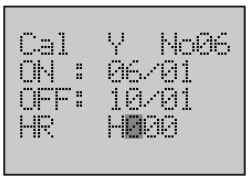

11. Use the **Forward** button to move the column cursor to the position of word address.
    The present setting is default address.

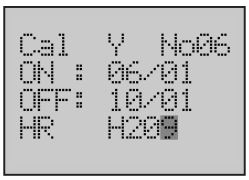

12. Move the column cursor to the digit to be set.
    Use the **Up** button to change the word address to ***209***.

13. Press the **OK** button to save the setting.

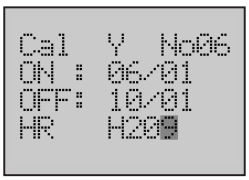

14. Press the **ESC** or **OK** button to return to the Calander Timer Screen.

Note

1. If a timer is in use, when the timer switch turns ON, the LCD Option Board will send command to PLC one time every 1 second to make control bit ON, when the timer switch turns OFF, the LCD Option Board will send command to PLC one time every 1 second to make control bit OFF.
2. Move the LCD Option Board from one PLC to another, the result of timer operation will be different if the time of two PLCs is not the same.

Timing Curve

Each timer can execute a trans-day, trans-week or trans-year operation. The operation period will be shown in the following curve.

Day Timer

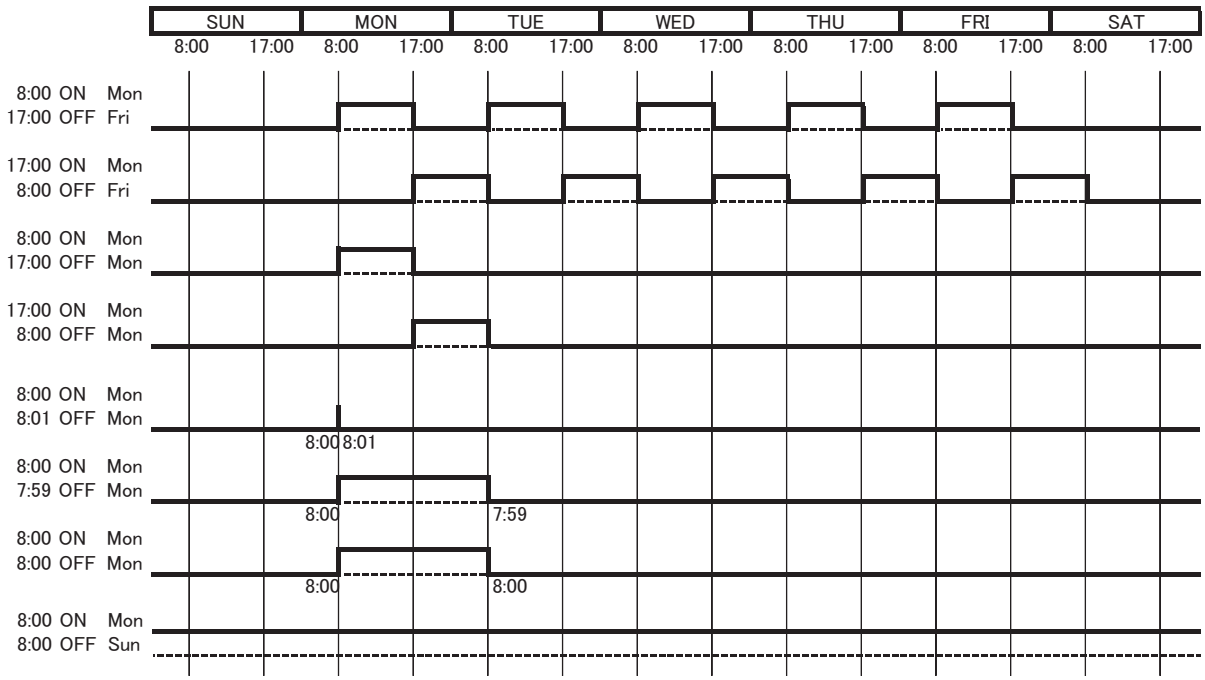

Weekly Timer

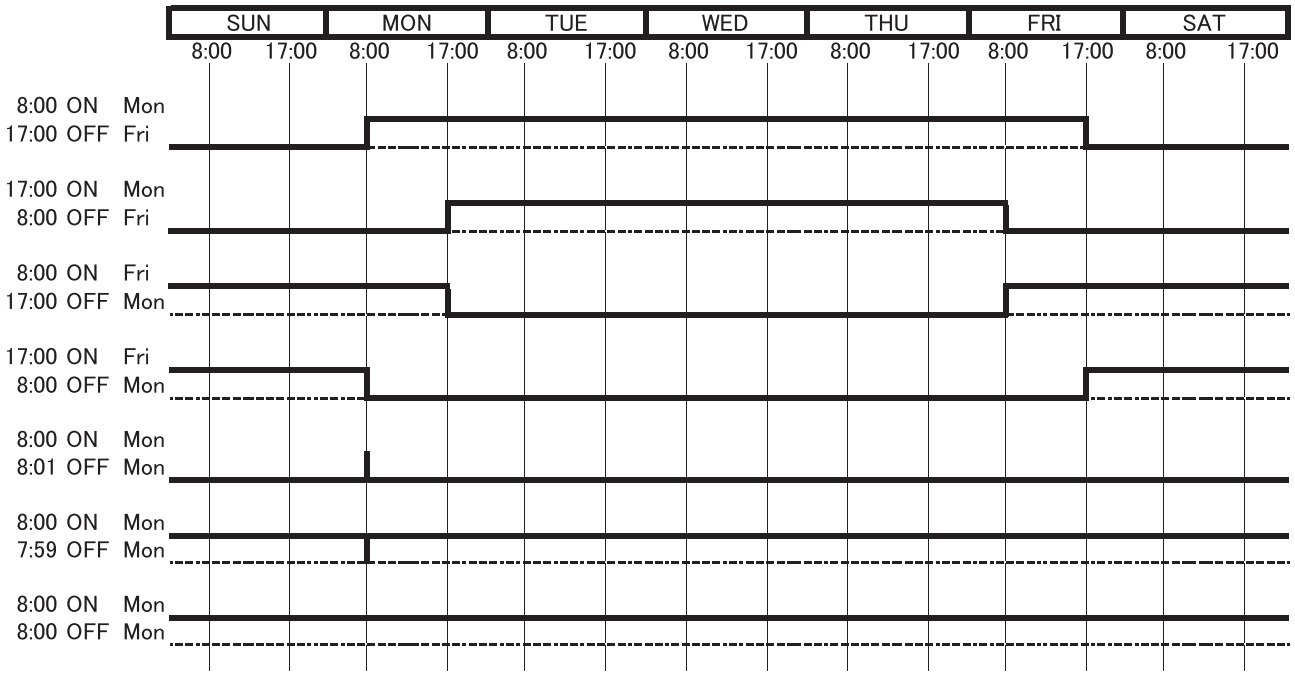

Calendar Timer

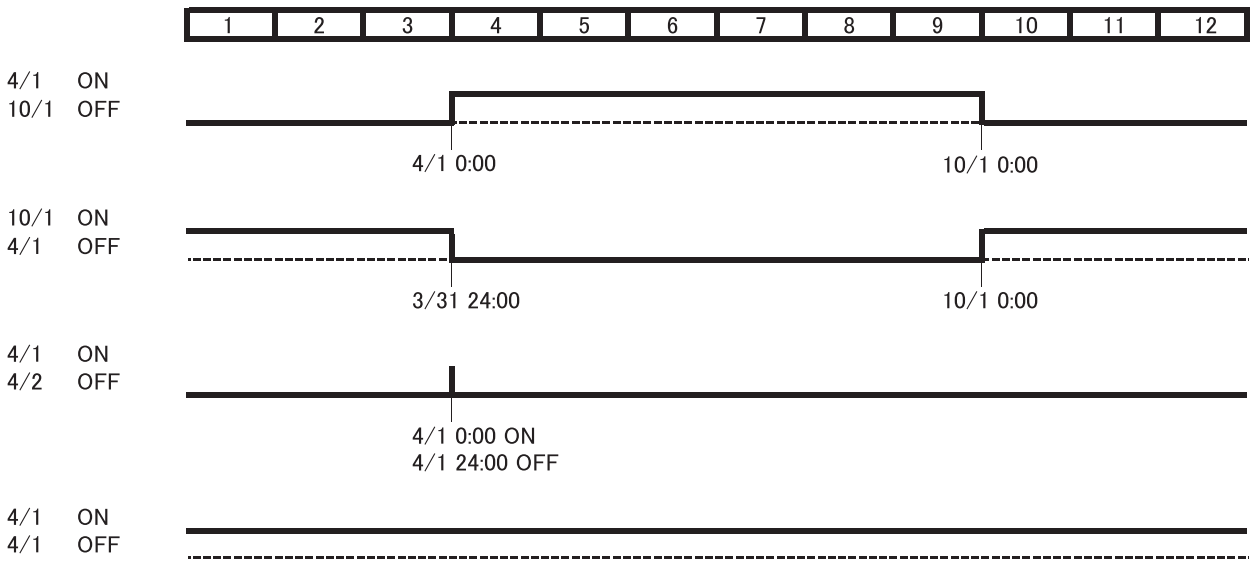

Note Set the OFF date to 1st October, the Calendar Timer will turn OFF at 24:00 31st September.

8-6-11 Data Backup

User can save the user settings to DM memory area from one LCD Option Board and load to other LCD Option Boards from the DM memory area.

Note Please do not take the DM area (D8000 to D8999) for other use.

User settings which can be backed up as shown below.

User setting		Quantity
User Monitor screen		16 screens
Message screen		16 screens
Timer Switch		16 × 3 timers
Other	Language	1
	Backlight	1
	Contrast	1

Loading User Setting

Example Load user settings from DM memory area.

1,2,3...

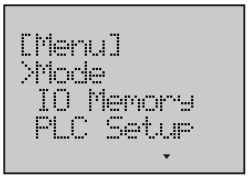

1. Switch to the Setup Mode.

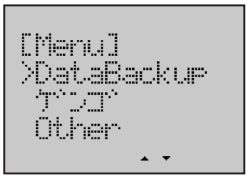

2. Press the **Down** button to select ***DataBackup***.

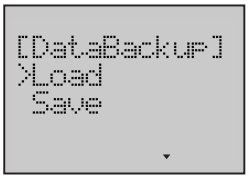

3. Press the **OK** button to enter the Data Backup menu.

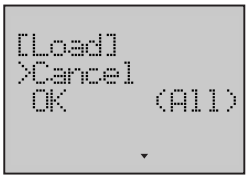

4. Press the **OK** button to enter the Load Operation Screen.
   Select the operation mode in the following table.

Operation Mode	Meaning
Load	Load user setting from DM area
Save	Save user setting into DM area

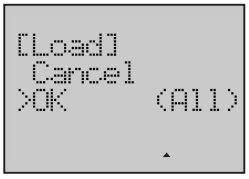

5. Press the **Down** button to select ***OK***.

Note Selecting ***Cancel*** will result in a return to the previous menu.

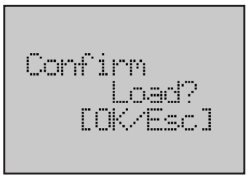

6. Press the **OK** button to display a load confirming screen.

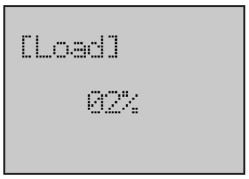

7. Press the **OK** button to start loading.
   A rate of loading will be displayed in the screen.

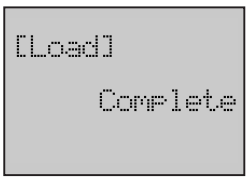

8. When the rate comes up to 100%, the loading is finished. Then it will display a complete screen.

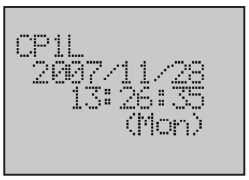

9. Press the **ESC** or **OK** button to restart the LCD Option Board.

Saving User Setting

Example Save user settings to DM memory area.

1,2,3...

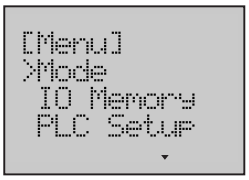

1. Switch to the Setup Mode.

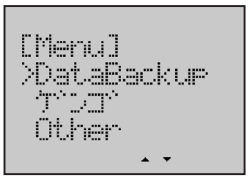

2. Press the **Down** button to select ***DataBackup***.

3. Press the **OK** button to enter the Data Backup menu.

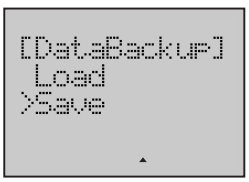

4. Press the **Down** button to select ***Save***.

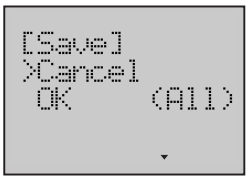

5. Press the **OK** button to enter the Save Operation Screen.

6. Press the **Down** button to select ***OK***.

Note Selecting ***Cancel*** will result in a return to the previous menu.

7. Press the **OK** button to display a save confirming screen.

8. Press the **OK** button to start saving.
   A rate of saving will be displayed in the screen.

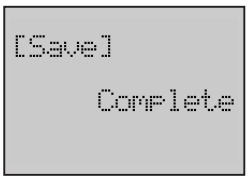

9. When the rate comes up to 100%, the saving is finished. Then it will display a complete screen.

8-6-12 Language Selection

Display for the LCD Option Board is available in 2 languages - English and Japanese.

Example Change the display language from English to Japanese.

1,2,3...

1. Switch to the Setup Mode.

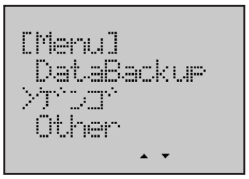

2. Press the **Down** button to select ゲンゴ .

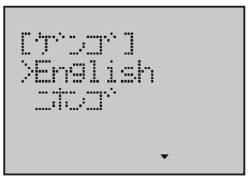

3. Press the **OK** button to enter the Language Setup Screen.
   The present language is English.

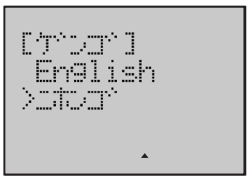

4. Press the **Down** button to select ニホンゴ .

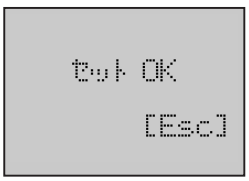

5. Press the **OK** button to save the setting.

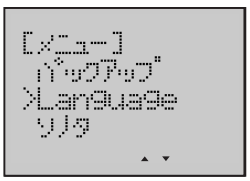

6. Press the **ESC** or **OK** button return to the previous menu.
   The display language will change to Japanese.

8-6-13 PLC Cycle Time

This function can display the cycle time of the CPU Unit. The operation method will be shown in the following example.

1,2,3...

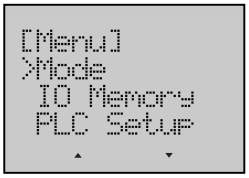

1. Switch to the Setup Mode.

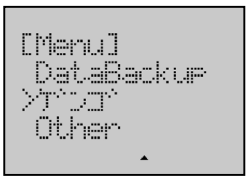

2. Press the **Down** button to select ***Other***.

3. Press the **OK** button to enter the Other menu.

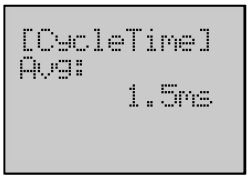

4. Press the **OK** button to enter the Cycle Time Screen.
   The average cycle time of the CPU Unit will be displayed.

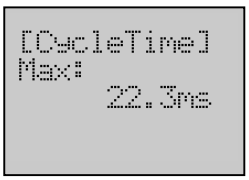

5. Press the **Down** button to display the max. cycle time of the CPU Unit.

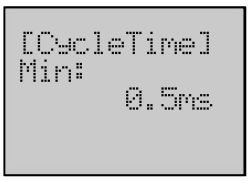

6. Press the **Down** button to display the min. cycle time of the CPU Unit.

8-6-14 PLC Clock Setting

This function can change the setting of the built-in clock in the CPU Unit.

Example Change PLC time to 12:00:00, PLC week to Saturday.

1,2,3...

1. Switch to the Setup Mode.

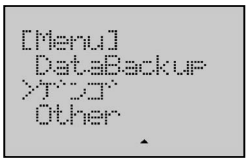

2. Press the **Down** button to select ***Other***.

3. Press the **OK** button to enter the Other menu.

4. Press the **Down** button to select ***ClockSet***.

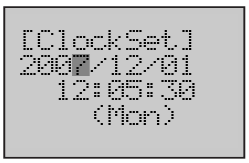

5. Press the **OK** button to enter the Clock Setup Screen.
   The present date, time and week of the CPU Unit will be displayed.

6. Use the **Forward** button to move the column cursor to the position of PLC time.
   Use the **Down** or **Up** button to change the time to ***12:00:00***.

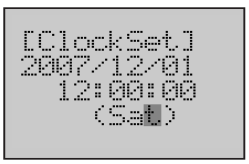

7. Use the **Forward** button to move the column cursor to the position of PLC week.
   Use the **Down** or **Up** button to select ***Sat***.

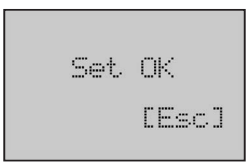

8. Press the **OK** button to save the setting.

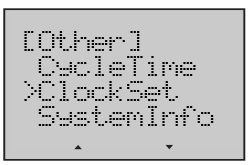

9. Press the **ESC** or **OK** button to return to the previous menu.

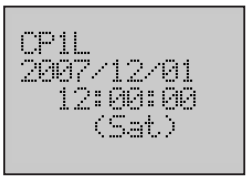

10. Press the **ESC** button to return to the Monitor Mode.

8-6-15 PLC System Information

This function can display the system information of the CPU Unit. The operation method will be shown in the following example.

1,2,3...

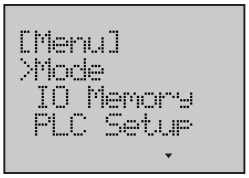

1. Switch to the Setup Mode.

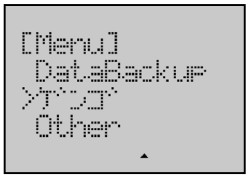

2. Press the **Down** button to select ***Other***.

3. Press the **OK** button to enter the Other menu.

4. Press the **Down** button to select ***SystemInfo***.

5. Press the **OK** button to enter the System Information Screen.
   Line 1 to 3 will display the CPU Unit model, line 4 the lot No.

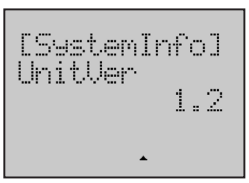

6. Press the **Down** button to display the CPU Unit version.

8-6-16 LCD Backlight Setting

This function can make a setting for the LCD backlight.

Example The backlight turns off after LCD has not been used for 5 minutes.

1,2,3...

1. Switch to the Setup Mode.

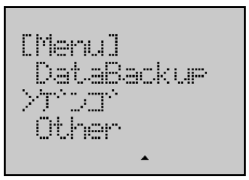

2. Press the **Down** button to select ***Other***.

3. Press the **OK** button to enter the Other menu.

4. Press the **Down** button to select ***BackLight***.

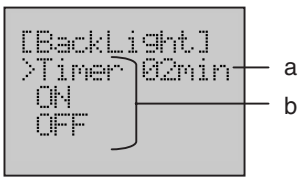

5. Press the **OK** button to enter the Backlight Screen.
The following table shows the setting items.

No.	Description		Meaning
a	Timer interval		The range is 02 to 30 minutes.
b	Backlight mode	Timer	Backlight will turn OFF if LCD has not been used for the timer interval.
		ON	Backlight is always ON.
		OFF	Backlight is always OFF.

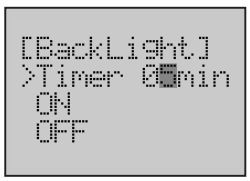

6. Use the **Forward** button to move the column cursor to the position of timer inerval.
Use the **Up** button to change the timer interval to ***05***.

7. Press the **OK** button to save the setting.

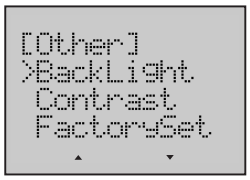

8. Press the **ESC** or **OK** button to return to the previous menu.

8-6-17 LCD Contrast Setting

This function can make a setting for the LCD contrast.

Example Change the contrast of LCD display to 8.

1,2,3...

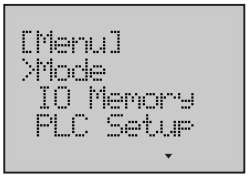

1. Switch to the Setup Mode.

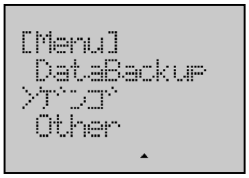

2. Press the **Down** button to select ***Other***.

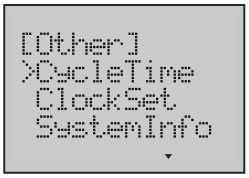

3. Press the **OK** button to enter the Other menu.

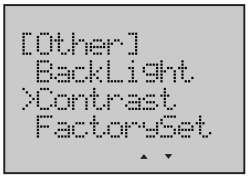

4. Press the **Down** button to select ***Contrast***.

5. Press the **OK** button to enter the Contrast Screen.
   The contrast level of LCD display is 1 to 16.

6. Use the **Up** button to change the level to ***08***.

7. Press the **OK** button to save the setting.

8. Press the **ESC** or **OK** button to return to the previous menu.

8-6-18 LCD Factory Setting

This function can initialize the factory setting of the LCD Option Board. The operation method will be shown in the following example.

1,2,3...

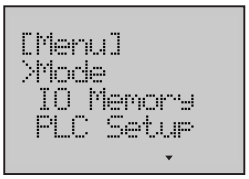

1. Switch to the Setup Mode.

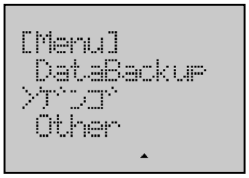

2. Press the **Down** button to select ***Other***.

3. Press the **OK** button to enter the Other menu.

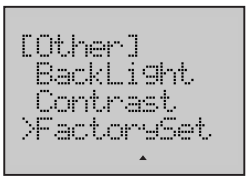

4. Press the **Down** button to select ***FactorySet***.

5. Press the **OK** button to enter the Factory Setting Screen.

6. Press the **Down** button to select **OK**.

Note Selecting ***Cancel*** will result in a return to the previous menu.

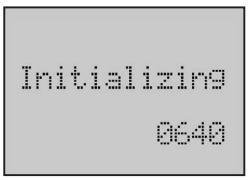

7. Press the **OK** button to start initializing.

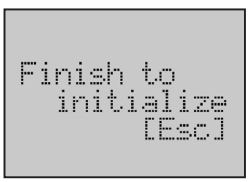

8. When the initializing is finished, it will display a complete screen.

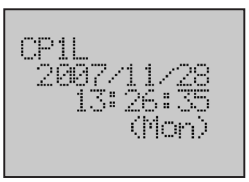

9. Press the **ESC** or **OK** button to restart the LCD Option Board.

8-7 Trouble Shooting

8-7-1 Symptom at Power ON or during Operation

Symptom	Probable cause	Possible solution
No LCD display	LCD connection error or no power supply from PLC.	Check if LCD is connected correctly and the PLC power supply is normal.
	Still in startup waiting time.	It's not error. Just wait a moment.
Display EEPROM Error Screen and blinking red back-light	EEPROM is damaged.	Replace the LCD Option Board.
	User settings in EEPROM are corrupted.	Press the ESC button to exit the screen. User settings backed up in EEPROM will be replaced by default settings. Then proceed to reset the screens. (See 8-7-3 for details.)
Display NG Screen	LCD connection error.	Check if LCD is connected correctly.
	Communication error between LCD and PLC.	Check the communication setting of PLC, switching DipSW4 to ON.
Display Error Screen and blinking red backlight	PLC error	Check PLC according to error code and eliminate the error.
Button unresponsing	Button is damaged.	Replace the LCD Option Board.
	User setting error.	Check the settings and change it.
	Noise disturbing.	Retry after the noise is reduced.
Display too faint	Backlight is damaged.	Replace the LCD Option Board.
	Contrast level is too low or too high.	Reset the contrast level.

Note Do not repair the LCD Option Board by yourself.

8-7-2 Communication Error Message during Operation

When communication error occurs, the error message will be displayed at the LCD Option Board and the red backlight will blink.

Error message	Probable cause	Possible solution
Parity Error or Framing Error or Overrun Error	Communication parameters or conditions of PLC are changed.	Check the communication setting of PLC.
	LCD connection error.	Check if LCD is still connected correctly.
	Noise disturbing.	• Return to normal automatically when the noise is reduced. • If the display cannot return to normal, press the ESC button to restart LCD.
FCS Error(Sum check)	Noise disturbing.	• Return to normal automatically when the noise is reduced. • If the display cannot return to normal, press the ESC button to restart LCD.
Buffer overflow	The length of receiving data is beyond the range of receiving memory.	Press the ESC button to restart LCD.
	Noise disturbing.	
Connecting Host...	LCD connection error.	Check if LCD is still connected correctly.
	The communication between PLC and LCD is out of service.	Check if PLC is running normally.
Response code Error	Operation mistake.	Refer to CJ/CS Communication Manual for solutions according to an end code.
	Noise disturbing.	• Return to normal automatically if the noise is reduced. • Press the ESC button to exit the screen.
	CX-Programmer and LCD execute some function at the same time.	Press the ESC button to exit the screen. Execute this function by either CX-Programmer or LCD.

8-7-3 Deleting EEPROM Error

1,2,3...

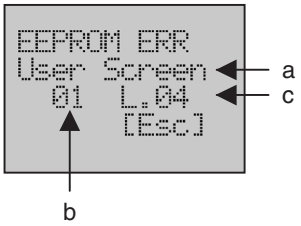

1. A flashing error screen will be displayed when an error occurs.
The following table shows the display items.

No.	Description	
a	Error type	User Monitor setting error
		Message setting error
		Timer Switch setting error
		Language setting error
		Backlight setting error
		Contrast setting error
b	Screen No.	
c	Line No.	

According to the error message, the setting of User Monitor Screen 2, line 4 is corrupted.

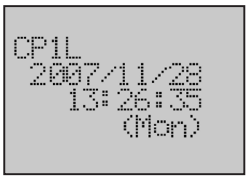

2. Press the **ESC** button to exit the screen. Once the EEPROM Error Screen has disappeared, the display will return to normal.

3. Enter the User Monitor Setup Screen 2, line 4.
User settings backed up in EEPROM are replaced by default settings.
Then reset the screen.

SECTION 9
Ethernet Option Board

This section gives an outline of the Ethernet Option Board, explains how to install and remove the Ethernet Option Board, and how to monitor and make settings required for operation. It also lists the errors during operation and provides countermeasures for troubleshooting.

9-1 Ethernet Option Board Function Guide 554
9-1-1 Overall system configuration example 554
9-1-2 Connecting the CX-Programmer to PLCs Online via Ethernet 555
9-1-3 Receiving Data from OMRON PLCs using Ethernet 556
9-2 Features 557
9-3 System Configuration 558
9-3-1 System Configuration 558
9-3-2 Devices Required for Constructing a Network 558
9-4 Specifications 559
9-5 FINS Communications 560
9-5-1 FINS Communications Service Specifications 560
9-5-2 Overview of FINS Communication Service 561
9-6 Part Names 562
9-7 Comparison with Previous Models 563
9-8 Installation and Initial Setup 564
9-8-1 Overview of Startup Procedure 564
9-8-2 Installation and Removing 565
9-8-3 Network Installation 566
9-8-4 Web Browser Setting Function 569
9-9 Memory Allocations 571
9-9-1 CIO Area Allocation 571
9-9-2 DM Area Allocation 573
9-10 Web Browser Setup and Display 577
9-10-1 Multi-language Function 577
9-10-2 Overview of Web Browser Function 577
9-10-3 System 578
9-10-4 HTTP 580
9-10-5 IP Address Table 581
9-10-6 IP Router Table 582
9-10-7 FINS/TCP 583
9-10-8 Unit Information 584
9-10-9 Unit Status 585
9-10-10 FINS Status 586
9-10-11 Error Log 587
9-11 Trouble Shooting 588
9-11-1 Error Log 588
9-11-2 Trouble-shooting with Indicators and Error Code Display 591
9-11-3 Error Status 591
9-12 Sample Application 592

9-1 Ethernet Option Board Function Guide

9-1-1 Overall system configuration example

Ethernet Option Board provides receiving commands by OMRON standard protocol FINS for CP1L and CP1H programmable controllers. The Ethernet Network Interface allows you to easily connect CP1L and CP1H Programmable Controllers onto new or existing Ethernet network and upload/download programs, communicate between controllers (do not support real-time scanning I/O on Ethernet Option Board).

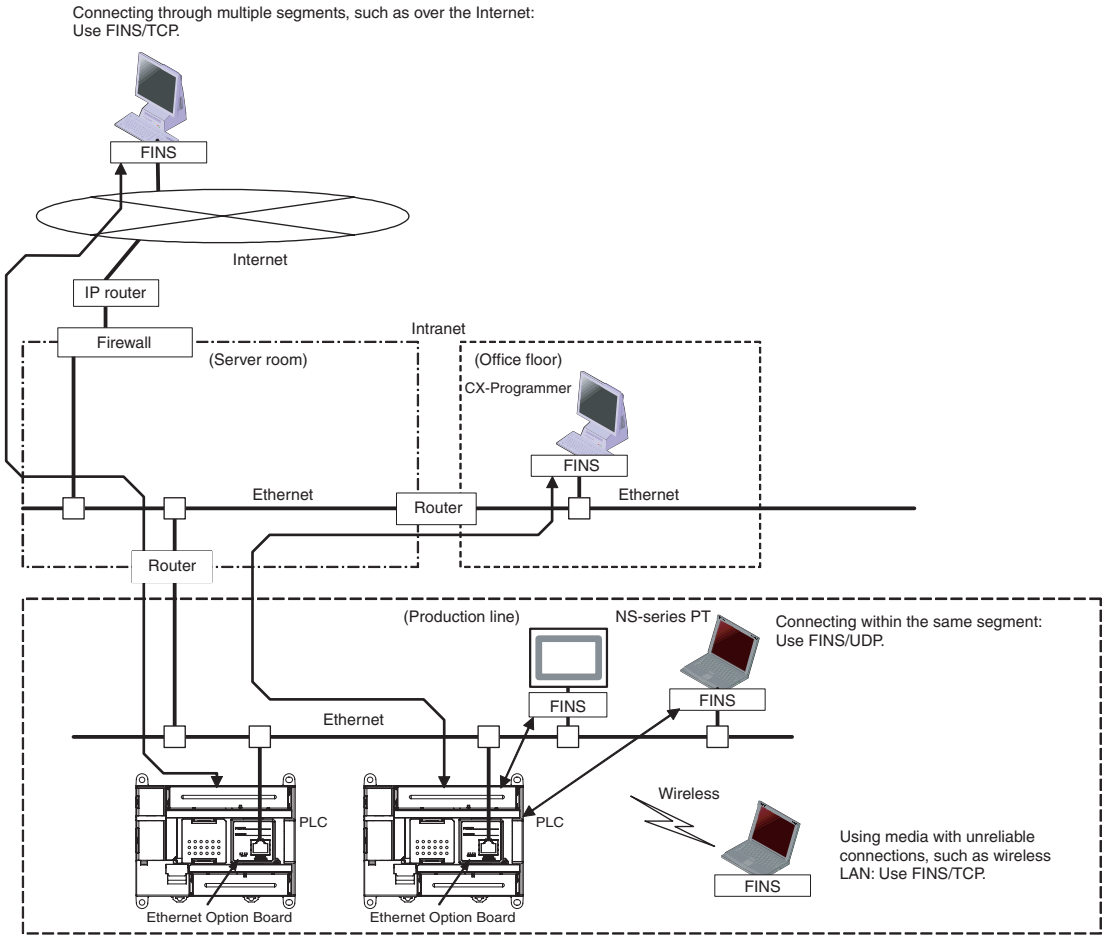

Note

1. Please use CX-Programmer version 8.1 or higher (CX-ONE version 3.1 or higher).
2. Please use CX-Integrator version 2.33 or higher (CX-ONE version 3.1 or higher) to make the routing table. Except making the routing table for CP1W-CIF41, other functions, such as transferring the parameters and network structure, are not supported by CX-Integrator.
3. Use the Web browser to set the CP1W-CIF41.
4. NS-series HMI version 8.2 or higher can use CP1W-CIF41 through Ethernet.

9-1-2 Connecting the CX-Programmer to PLCs Online via Ethernet

Connecting within the Same Segment

Use the UDP/IP version of the FINS communications service (i.e., FINS/UDP). FINS/UDP is supported by many OMRON products and is compatible with earlier Ethernet Units (CS1W-ETN01/ETN11/ETN21 and CJ1W-ETN11/ETN21). The CX-Programmer can be connected and used with FINS/UDP.

Connecting through Multiple Segments

Use the TCP/IP version of the FINS communications service (i.e., FINS/TCP). It provides automatic recovery at the TCP/IP layer from communications errors (such as packet loss) that occur during multilevel routing. For CX-Programmer, FINS/TCP can be used to directly connect to the PLC online.

Using Media with Unreliable Connections, Such as a Wireless LAN

Use the TCP/IP version of the FINS communications service (i.e., FINS/TCP). It provides automatic recovery at the TCP/IP layer from communications errors (such as packet loss) resulting from unreliable connections. For CX-Programmer, FINS/TCP can be used to directly connect to the PLC online.

Connecting from a Personal Computer with a Dynamic Private IP Address

Depending on whether or not the connection will be within the same segment, either use an IP address conversion method for dynamic IP addresses in the UDP/IP version of the FINS communications service or use the TCP/IP version of the FINS communications service.

It is possible to connect online to a PLC using the CX-Programmer from a computer serving as a temporarily connected node or a permanent DHCP client.

For CX-Programmer, FINS/TCP can be used to directly connect to the PLC online.

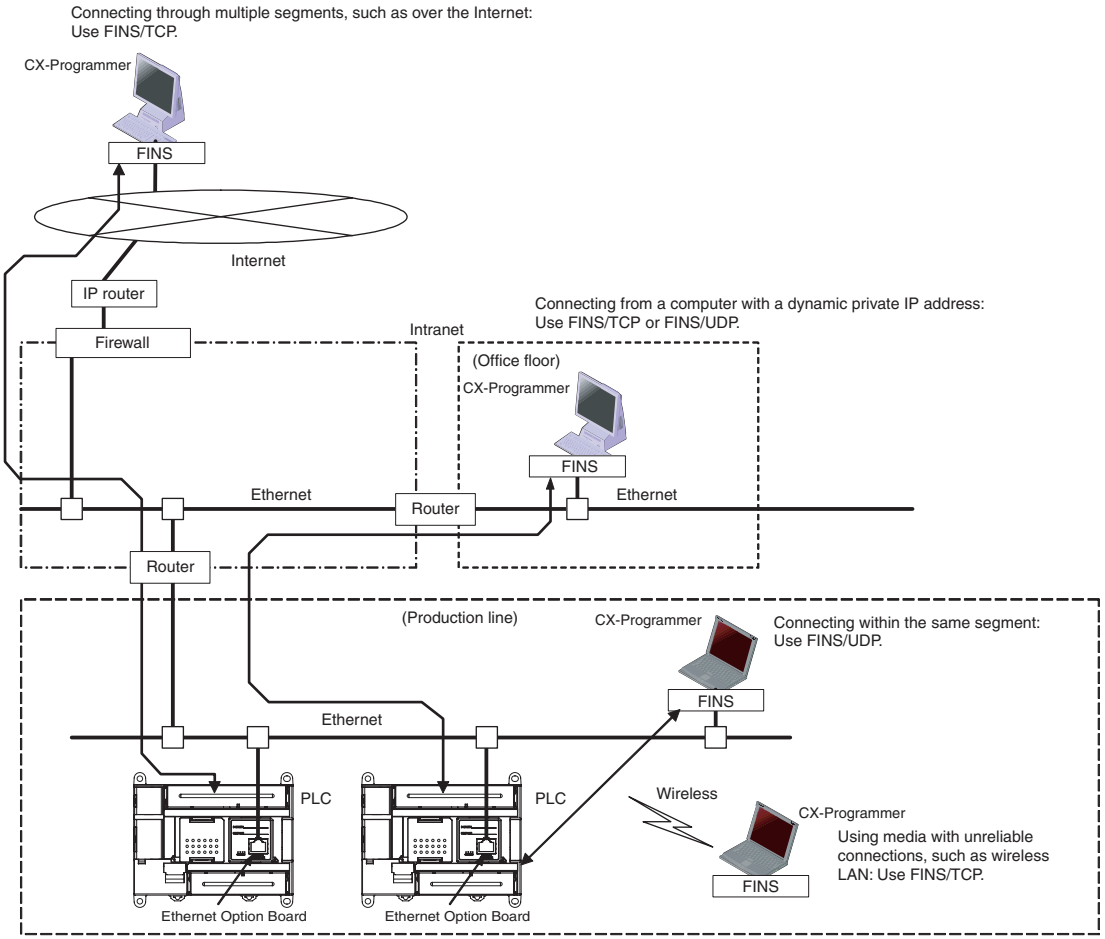

9-1-3 Receiving Data from OMRON PLCs using Ethernet

The CP1W-CIF41 Ethernet Option Board can only support receiving FINS commands from OMRON PLCs using Ethernet.

Connecting within the Same Segment

Use the UDP/IP version of the FINS communications service (i.e., FINS/UDP), and construct applications using the SEND(090), RECV(098), and CMND(490) instructions in the ladder program. FINS/UDP is supported by many OMRON products, and is compatible with earlier Ethernet Units (CS1W-ETN01/ETN11/ETN21 and CJ1W-ETN11/ETN21). The protocol processing for FINS/UDP is simpler than for FINS/TCP, giving FINS/UDP certain advantages in terms of performance. Another feature of FINS/UDP is that it can be used for broadcasting.

On the other hand, with FINS/UDP it is necessary to provide measures, such as retries, for handling communications errors.

Connecting through Multiple Segments

Use the TCP/IP version of the FINS communications service (i.e., FINS/TCP), and construct applications using the SEND(090), RECV(098), and CMND(490) instructions in the ladder program. FINS/TCP is the initial function supported by this Ethernet Option Board (CP1W-CIF41). It provides automatic recovery at the TCP/IP layer from communications errors (such as packet loss) that occur during multilevel routing.

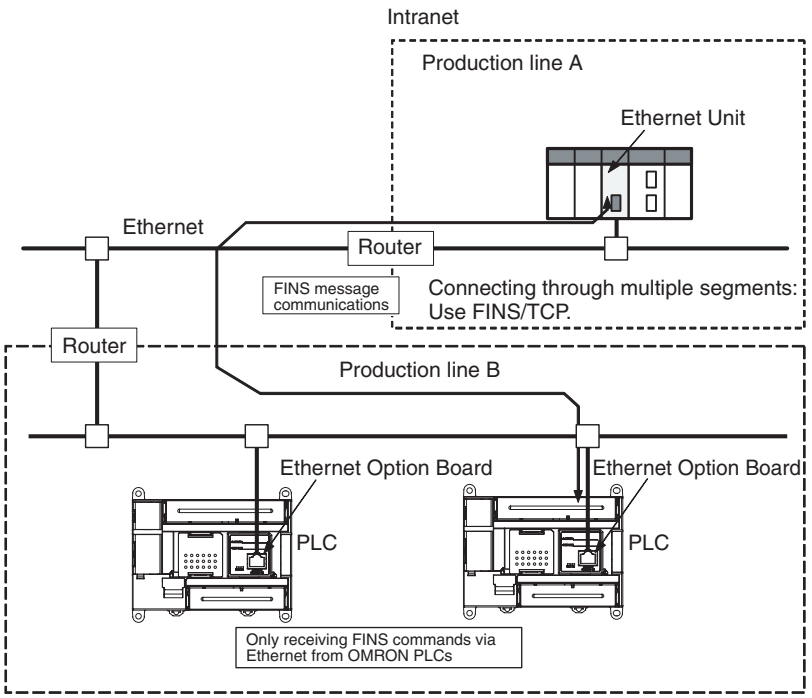

9-2 Features

Compatibility and Speed

The transmission medium of Ethernet side has been upgraded to 100Base-TX, while compatibility with some functions and application interfaces of the existing Ethernet Unit models for CS/CJ series has been maintained.

Limited by the Toolbus protocol used on the serial side, the processing speed is only 115.2kbps, slower than the existing Ethernet Unit. The FINS frame length is less than 1,004 bytes, so the system response performance for the same FINS message applications is longer than the existing Ethernet Unit.

Various Protocols Available on Ethernet

A variety of protocols make a wide range of applications for use on an Ethernet network. The protocols that can be selected include receiving commands by OMRON's standard protocol FINS and reading Ethernet Option Board settings and status by HTTP.

A communications service can be selected according to need, allowing the PLC to be flexibly integrated with the Ethernet information network.

Improved FINS Message Communications

The following functions have been maintained according to the existing Ethernet Unit models for CS/CJ series.

- The maximum number of nodes is 254.
- Communications are enabled even if the host computer's IP address is dynamic.
- An automatic client FINS node address allocation function makes it possible to connect online to the PLC even if no FINS node address has been set for the host computer.
- FINS message communications are enabled in both UDP/IP and TCP/IP, but it are only enabled in TCP/IP with up to 2 simultaneous connections .
  →Previously it are enabled in TCP/IP with up to 16 simultaneous connections and all can be set to client.
- Multiple FINS applications, such as the CX-Programmer, on the same computer can be connected online to the PLC via Ethernet.

Use Web Function to Read Ethernet Option Board Settings and Status

A Web function is provided in Ethernet Option Board.

This enables use of a Web browser to read the Ethernet Option Board's system settings and statuses.

Full Range of Functions for Handling Troubles

A full range of functions is provided for promptly handling any troubles.

- Self-diagnostic function when power is turned ON.
- Error log for recording error information when an error occurs.

9-3 System Configuration

9-3-1 System Configuration

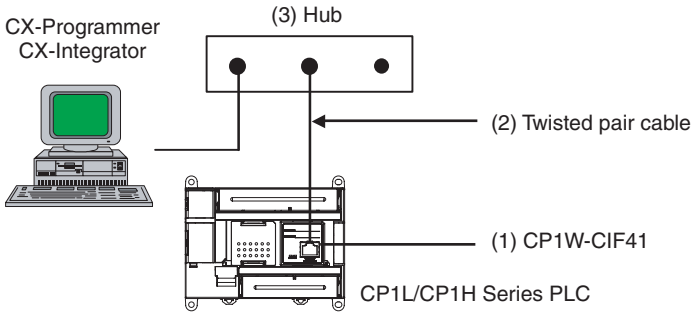

9-3-2 Devices Required for Constructing a Network

The basic configuration for a 100Base-TX Ethernet System consists of one hub to which nodes are attached in star form using twisted-pair cable. The devices shown in the following table are required to configure a network with 100Base-TX-type CP1W-CIF41, so prepared them in advance.

Network device	Contents
(1) Ethernet Option Board (CP1W-CIF41)	The Ethernet Option Board is a Communication Unit that connects a CP1H series or CP1L series PLC to 100Base-TX Ethernet networks. (They can also be used as 10Base-T.)
(2) Twisted-pair cable	This is twisted-pair cable for connecting 100Base-TX type Ethernet Option Board to the hub, with an RJ45 Modular Connector at each end. Use a category 3, 4, 5, or 5e UTP (unshielded twisted pair) or STP (shielded twisted-pair) cable.
(3) Hub	This is a relay device for connecting multiple nodes in a star LAN.

Recommended Hubs

For detail on recommended devices for constructing a network, refer to *9-8-3 Network Installation*.

9-4 Specifications

Item		Specifications	
Model number		CP1W-CIF41	
Type		100/10Base-TX (Auto-MDIX)	
Applicable PLCs		CP1L and CP1H PLCs	
Unit classification		CP1 option port unit	
Mounting location		CP1L and CP1H micro PLC option port	
Max. number of Units that can be mounted		2 sets (See note.)	
Size of Buffers		8K bytes	
Transfer	Media access method	CSMA/CD	
	Modulation method	Baseband	
	Transmission paths	Star form	
	Baud rate	100 Mbit/s (100Base-TX)	10 Mbit/s (10Base-T)
		• Half/full auto-negotiation for each port • Link speed auto-sensing for each port	
	Transmission media	• Unshielded twisted-pair (UDP) cable Categories: 5, 5e • Shielded twisted-pair (STP) cable Categories: 100Ω at 5, 5e	• Unshielded twisted-pair (UDP) cable Categories: 3, 4, 5, 5e • Shielded twisted-pair (STP) cable Categories: 100Ω at 3, 4, 5, 5e
	Transmission distance	100 m (distance between hub and node)	
Current consumption (Unit)		130 mA max. at 5 V DC	
Vibration resistance		Conforms to JIS 0040. 10 to 57Hz: 0.075-mm amplitude, 57 to 150 Hz: acceleration 9.8 m/s^2 in X, Y, and Z directions for 80 minutes each (sweep time: 8 minutes×10 sweeps = 80 minutes)	
Shock resistance		Conforms to JIS 0041. 147m/s^2, 3 times each in X, Y, and Z directions	
Ambient operating temperature		0 to 55°C	
Ambient humidity		10% to 90% (with no condensation)	
Atmosphere		Must be free of corrosive gas.	
Ambient storage temperature		-20 to 75°C	
Weight		23 g max.	
Dimensions		36.4×36.4×28.2 mm (W×H×D)	

Note 1. Two CP1W-CIF41 (unit version 2.0) can be mounted in the CP1L/CP1H system.

2. One CP1W-CIF41 (unit version 2.0) and one CP1W-CIF41 (unit version 1.0) can be mounted in the CP1L/CP1H system.

3. Only one CP1W-CIF41 (unit version 1.0) can be mounted in the CP1L/CP1H system.
If two CP1W-CIF41 are mounted, the CP1W-CIF41 mounted on option board slot 1 will be abnormal and ERR indicator will be ON, the CP1W-CIF41 on option board slot 2 will work normally.

9-5 FINS Communications

9-5-1 FINS Communications Service Specifications

Item	Specification	
Number of nodes	254	
Message Length	1016 bytes max.	
Date Length	1004 bytes max. (See note)	
Number of buffer	14 (1016 bytes×6+240 bytes×8)	
Protocol name	FINS/UDP method	FINS/TCP method
Protocol used	UDP/IP	TCP/IP
	The selection of UDP/IP or TCP/IP is made from the FINS/TCP Tab by Web browser function.	
Number of connections	---	2
Port number	9600 (default) Can be changed.	9600 (default) Can be changed.
Protection	No	Yes (Specification of client IP addresses when unit is used as a server)
Other	Items set for each UDP port • Broadcast • Address conversion method	Items set for each connection • Server specification • Remote IP address spec. Server: specify IP addresses of clients permitted to connect. • Automatic FINS node address allocation Specify automatic allocation of client FINS node addresses
Internal table	This is a table of correspondences for remote FINS node addresses, remote IP addresses, TCP/UDP, and remote port numbers. It is created automatically when power is turned ON to the PLC or when the unit is restarted, and it is automatically changed when a connection is established by means of the FINS/TCP method or when a FINS command received. The following functions are enabled by using this table. • IP address conversion using the FINS/UDP method • Automatic FINS node address conversion after a connection is established using the FINS/TCP method • Automatic client FINS node address allocation using the FINS/TCP method • Simultaneous connection of multiple FINS applications	

Note Refer to the following diagram for the relation between message length and date length.

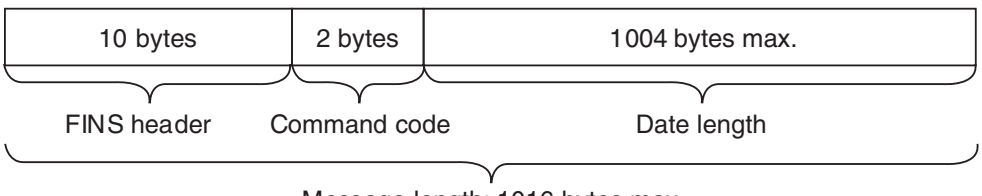

9-5-2 Overview of FINS Communication Service

Basic Functions

FINS commands can be received from other PLCs or computers on the same Ethernet network by executing SEND(090), RECV(098), or CMND (490) instructions in the ladder diagram program. This enables various control operations such as the reading and writing of I/O memory between PLCs, mode changes, and file memory operations.

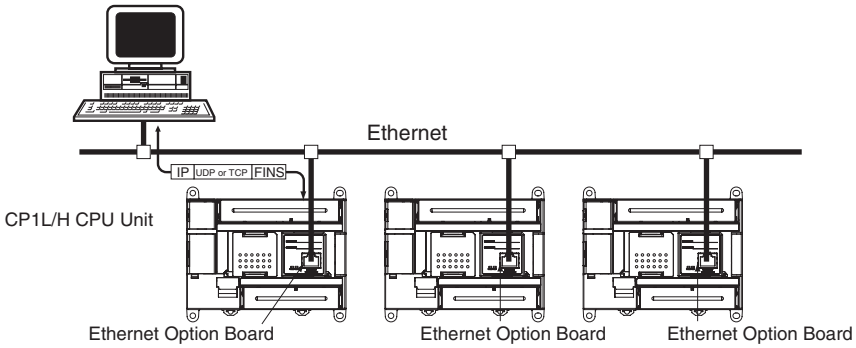

Executing, from the host computer, FINS commands with UDP/IP or TCP/IP headers enables various control operations, such as the reading and writing of I/O memory between PLCs, mode changes, and file memory operations.

For example, it is possible to connect online via Ethernet from FINS communications applications such as the CX-Programmer, and to perform remote programming and monitoring.

Upgraded Functions

With the CP1W-CIF41, the following functions have been upgraded.

- The FINS communications service can be executed not only with UDP/IP but also with TCP/IP, and it is even possible to use FINS communications with both UDP/IP and TCP/IP together on the same network. Using TCP/IP makes FINS communications highly reliable.
- Even if the IP address and UDP port number of the host computer (a DHCP client computer) are changed, it is still possible for the host computer to send FINS commands to PLCs on the Ethernet network and to receive responses. When UDP is used, either the automatic generation (dynamic) method or the IP address table method must be selected for IP address conversion. When TCP is used, changes in IP address and TCP port numbers are handled automatically.
- Multiple FINS applications (CX-Programmer and user-created application programs) at the same computer can be connected online to a PLC via Ethernet (using either TCP/IP or UDP/IP).

Note The message service does not guarantee that a message will reach the destination node. A message may be lost during transmission due to factors such as noise. To prevent this from occurring when using message services, it is common to set up retry processing at the node from which instructions are issued. With the SEND(090), RECV(098), and CMND(490) instructions, retry processing is executed automatically by specifying the number of retries, so specify a number other than 0.

9-6 Part Names

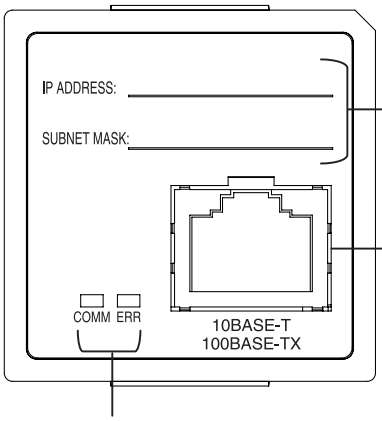

Label
Attach the label here to show IP address and subnet mask.

Ethernet Connector
Used to connect the Ethernet twisted-pair cable.

LED Indicators
Display the operating status of the Option Board.

LED Indicators

Indicator	Color	Status	Meaning
COMM	Yellow	Not lit	Not sending or receiving data.
		Flashing	Sending or receiving data.
ERR	Red	Not lit	Unit normal.
		Lit	An fatal error has occurred at the Unit.
		Flashing	An no-fatal error has occurred at the unit.

9-7 Comparison with Previous Models

Item		Previous Models	New Models
Model number		CS1W-ETN21 CJ1W-ETN21	CP1W-CIF41
Physical layer		100/10Base-TX	100/10Base-TX (Auto-MDIX)
Number of nodes		254	254
PLC maintenance via the Internet		Can send commands, including FINS commands, by e-mail over the Internet from a computer to the PLC.	Not supported
Server specification		Specification by IP address or by host name	Not supported
FINS communications service	Automatic IP address acquisition	A computer automatically acquiring IP addresses can send commands to the PLC and receive responses.	Same as previous models
	FINS communication with computer without fixed node address	Possible, with Automatic allocation by Ethernet Option Board (Client FINS automatic node address allocation function, TCP/IP only)	Same as previous models
	Handling TCP/IP	With FINS communications, both UDP/IP and TCP/IP (with up to16 simultaneous connections and all can be set to client) possible.	With FINS communications, both UDP/IP and TCP/IP (with up to 2 simultaneous connections) possible.
	Simultaneous connection of multiple applications in a computer	Possible (with both UDP/IP and TCP/IP)	Same as previous models
Mail functions		Supported	Not Supported
FTP server function		Supported	Not Supported
Socket services function		Supported	Not Supported
Automatic clock information adjustment		Supported	Not Supported
FINS frame length		2012	1016
Buffer numbers		392 (2K bytes×392)	14 (1016 bytes×6+240 bytes×8)
Inner bus		Parallel	Serial port

Note Limited by the CP1W-CIF41 inner bus protocol (Toolbus, 115200kbps), the system response performance is longer than the existing Ethernet Unit. Please consider the FINS command processing time and buffer limitation when using the CP1W-CIF41 Ethernet Option Board.

Comparison with CP1W-CIF41 Version 1.0

Item	CP1W-CIF41 Version 1.0	CP1W-CIF41 Version 2.0
Reset system settings function	Not supported	Turn on the Reset Flags A525.00/01 in the Auxiliary Area.
Restart function	Click the Restart Button from the Web browser.	• Click the Restart Button from the Web browser. • Turn on the Restart Flags A525.08/09 in the Auxiliary Area.
Max. number of units that can be mounted	1 set	2 sets (CP1H, CP1L M-type) 1 set (CP1E, CP1L L-type)
PLC Modules that can be supported	CP1H, CP1L	CP1H, CP1L, CP1E

9-8 Installation and Initial Setup

9-8-1 Overview of Startup Procedure

The following procedure is the same for the CS Series and CJ Series.

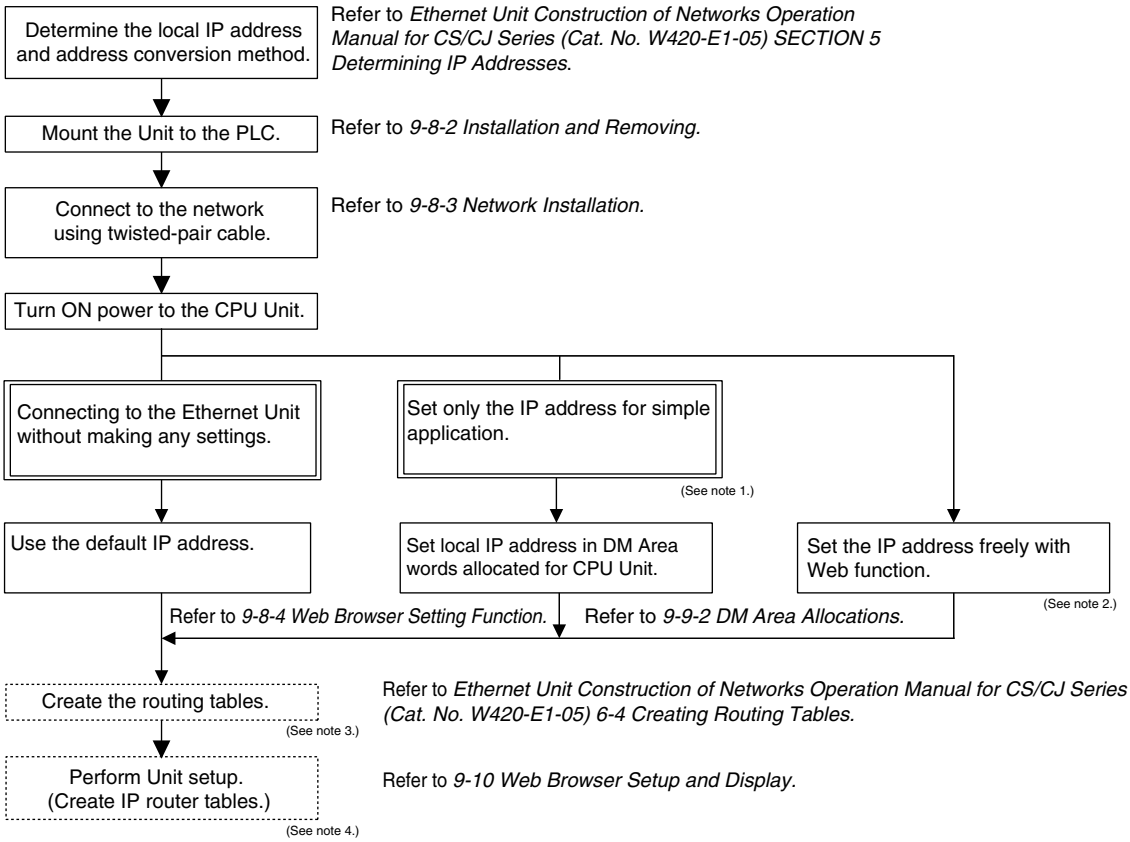

Note

1. When using this method, always leave the local IP address of system setup in the Ethernet Option Board set to the value of 0.0.0.0. If this area contains any other value, any setting made in the allocated CIO words will be overwritten with it.
2. The local IP address and other parameters can be set from the Web browser.
3. It is not necessary step, and the CX-Integrator version 2.33 or higher (CX-ONE version 3.1 or higher) is required.

   When the FINS communications service is used, routing tables must be created in advance. Routing tables are required in the following circumstances.

   - When communicating with a PLC or computer on another network (e.g. remote programming or monitoring using FINS message or a CX-programmer)
   - When multiple Communications Units are mounted to a single PLC (e.g. CPU unit)
   - When routing tables are used for one or more other nodes on the same network
4. It is not necessary step, and the Web browser is required.

9-8-2 Installation and Removing

The following processing explains how to install and remove an Ethernet Option Board.

⚠ **Caution** Always turn OFF the power supply to the CPU unit and wait until all the operation indicators go out before installing or removing the Ethernet Option Board.

Installation

1,2,3...

1. Press the up/down lock-levers on both sides of the Option Board slot cover at the same time to unlock the cover, and then pull the cover out.
2. Check the alignment to make the corner cut of the Ethernet Option Board fit in the Option Board slot, and firmly press the Ethernet Option Board in until it snaps into place.

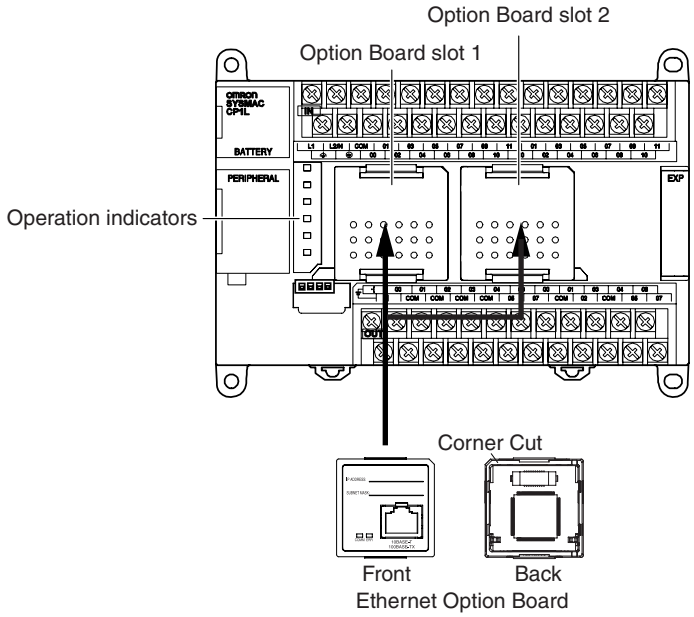

Note If two CP1W-CIF41 (unit version 1.0) Ethernet Option Boards are mounted on the CP1L/CP1H PLC, the CP1W-CIF41 mounted on Option Board slot1 (left side) will run in abnormal status and ERR indicator will be ON. If the ladder program operates the with CP1W-CIF41 fatal error, the PLC will generate the non-fatal error.

3. For CPU Units with 30, 40 or 60 I/O points, switch DipSW4 of the CPU unit to ON, if the Ethernet Option Board is mounted on the Option Board slot 1 (left side). Switch DipSW5 of the CPU unit to ON, if the Ethernet Option Board is mounted on the Option Board slot 2 (right side).
   For CPU Units with 14 or 20 I/O points, switch DipSW4 of the CPU unit to ON.

Note DipSW4 and DipSW5 are OFF at shipment.

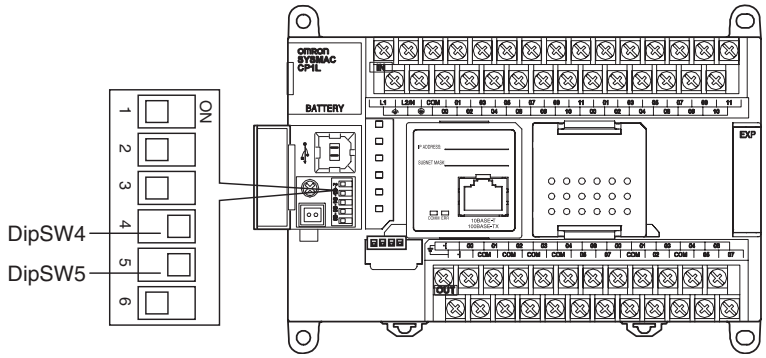

Removing

Press the up/down lock-levers on both sides of the Ethernet Option Board at the same time to unlock the Ethernet Option Board, and then pull it out.

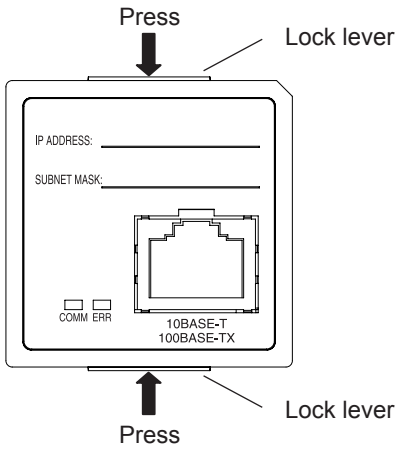

9-8-3 Network Installation

Basic Installation Precautions

- Take the greatest care when installing the Ethernet System, being sure to follow ISO 802-3 specifications. You must obtain a copy of these specifications and be sure you understand them before attempting to install an Ethernet System. Unless you are already experienced in installing communications systems, we strongly recommend that you employ a professional to install your system.
- Do not install Ethernet equipment near sources of noise. If noise-prone environments are unavoidable, be sure to take adequate measures against noise interference, such as installing network components in grounded metal cases, using optical links in the system, etc.

Recommended products

The following products are recommended for use with the Ethernet Option Board.

Part	Maker	Model number	Specifications	Inquires
Hub	100BASE-TX			
	OMRON	W4S1-03B	10/100 Mbit/s 3-port hub	
	OMRON	W4S1-05B (C)	10/100 Mbit/s 5-port hub	
	PHOENIX CONTACT	SWITCH 5TX	10/100 Mbit/s 5-port hub	
	Allied Telesis	RH509E	9-port hub	Allied Telesis (0120) 86-0442 (in Japan only)
		MR820TLX	9-port hub with 10Base-5 backbone port	
	10BASE-T			
	Allied Telesis	RH509E	9-port hub	Allied Telesis (0120) 86-0442 (in Japan only)
		MR820TLX	9-port hub with 10Base-5 backbone port	
Twisted-pair cable	100BASE-TX			
	Fujikura	F-LINK-E 0.5mm x 4P	STP (shielded twisted-pair) cable: Category 5, 5e **Note:** Impedance is limited to 100 Ω	---
	Fujikura	CTP-LAN5 0.5mm x 4P	UTP (unshielded twisted-pair) cable: Category 5, 5e	
	10BASE-T			
	Fujikura	F-LINK-E 0.5mm x 4P	STP (shielded twisted-pair) cable: Category 3, 4, 5, 5e **Note:** Impedance is limited to 100 Ω	
	Fujikura	CTP-LAN5 0.5mm x 4P	UTP (unshielded twisted-pair) cable: Category 3, 4, 5, 5e	
Connectors (Modular plug)	STP Plug			
	Panduit Corp	MPS588	---	
	UTP Plug			
	Panduit Corp	MP588-C	---	

Precautions on Laying Twisted-pair Cable

Basic Precautions

- Press the cable connector in firmly until it locks into place at both the hub and the Ethernet Option Board.
- After laying the twisted-pair cable, check the connection with a 10Base-T cable tester.

Environment Precautions

- The UTP cable is not shielded, and the hub is designed for use in OA environments. In environments subject to noise, construct a system with shielded twisted-pair (STP) cable and hubs suitable for an FA environment.

- Do not lay the twisted-pair cable together with high-voltage lines.
- Do not lay the twisted-pair cable near devices that generate noise.
- Do not lay the twisted-pair cable in locations subject to high temperature or high humidity.
- Do not lay the twisted-pair cable in locations subject to excessive dirt and dust or to oil mist or other contaminants.

Hub Installation Environment Precautions

- Do not install the hub near devices that generate noise.
- Do not install the hub in locations subject to high temperature or high humidity.
- Do not install the hub in locations subject to excessive dirt and dust or to oil mist or other contaminants.

Hub Connection Methods

If more hub ports are required, they can be added by connecting more than one hub. There are two possible connection methods for hubs: Cascade and stacked.

Ethernet Connectors

The following standards and specifications apply to the connectors for the Ethernet twisted-pair cable.

- Electrical specifications: Conforming to IEEE802.3 standards
- Connector structure: RJ45 8-pin Modular Connector

(conforming to ISO8877)

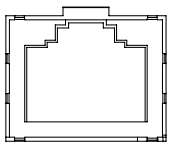

Connector Pin	Signal Name	Abbr.	Signal Direction
1	Transmission data +	TD+	Output
2	Transmission data -	TD-	Output
3	Reception data +	RD+	Input
4	Not used	---	---
5	Not used	---	---
6	Reception data -	RD-	Input
7	Not used	---	---
8	Not used	---	---
Hood	Frame ground	FG	---

Connecting the Cable

⚠Caution Turn OFF the PLC's power supply before connection or disconnecting twisted-pair cable.

⚠Caution Allow enough space for the bending radius of the twisted-pair cable.

1,2,3...

1. Lay the twisted-pair cable.
2. Connect the cable to the hub. Be sure to press in the cable until it locks into place.
   Request cable installation from a qualified professional.
3. Connect the cable to the connector on the Ethernet Option Board. Be sure to press in the cable until it locks into place.

9-8-4 Web Browser Setting Function

The Ethernet Option Board's system settings can be set using the Web browser of a personal computer or other device. The Ethernet Option Board's Web window is displayed by accessing the following URL from the Web browser.

English page: http://(Ethernet Option Board's IP address)/E00.htm

Japanese page: http://(Ethernet Option Board's IP address)/J00.htm

Chinese page: http://(Ethernet Option Board's IP address)/C00.htm

In this example, use the following procedure to set the IP address using Internet Explorer version 6.0 and the Ethernet Option Board's English Web pages.

1,2,3... 1. Connect to the Ethernet Option Board from the Web browser using the Ethernet Option Board's default IP address.
http://192.168.250.1/E00.htm

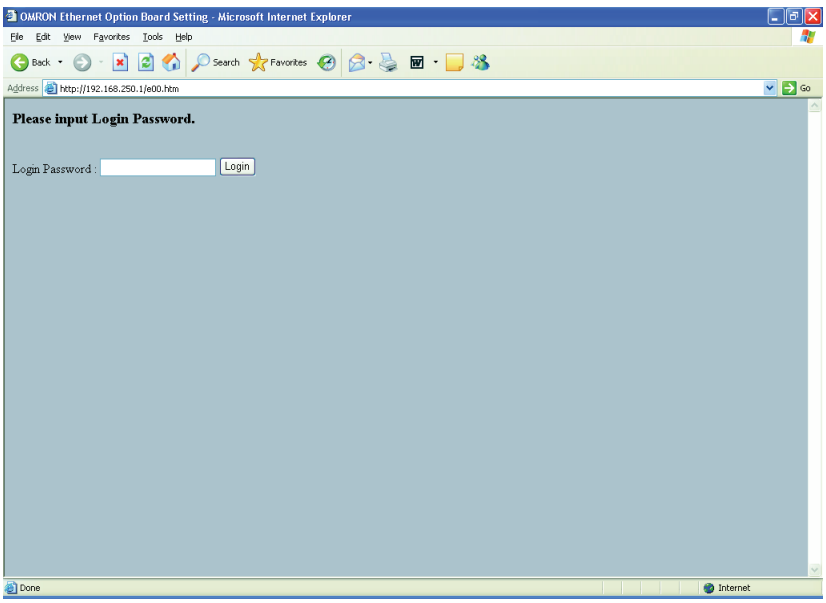

2. Input the default password "ETHERNET" and click the **Login** Button.

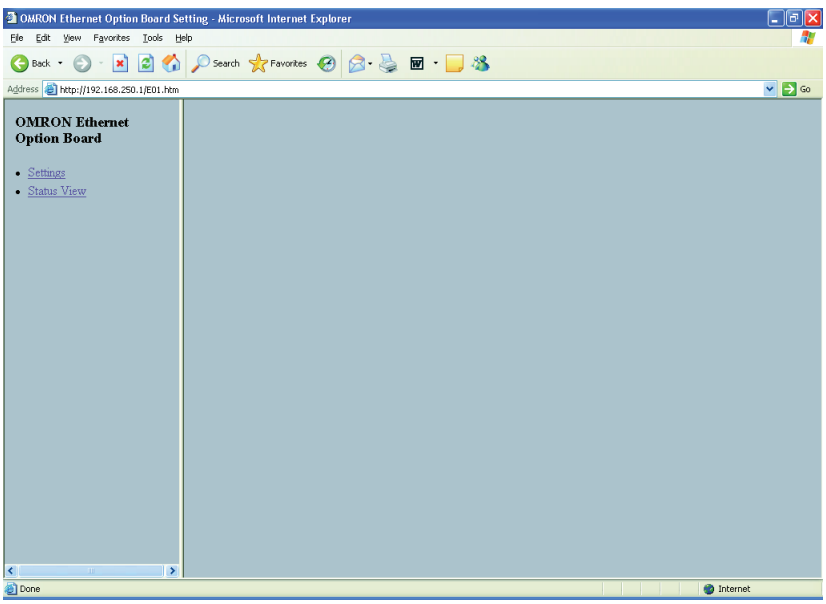

3. Select ***Settings*** from the menu on the left side of the window to display the Settings Menu.

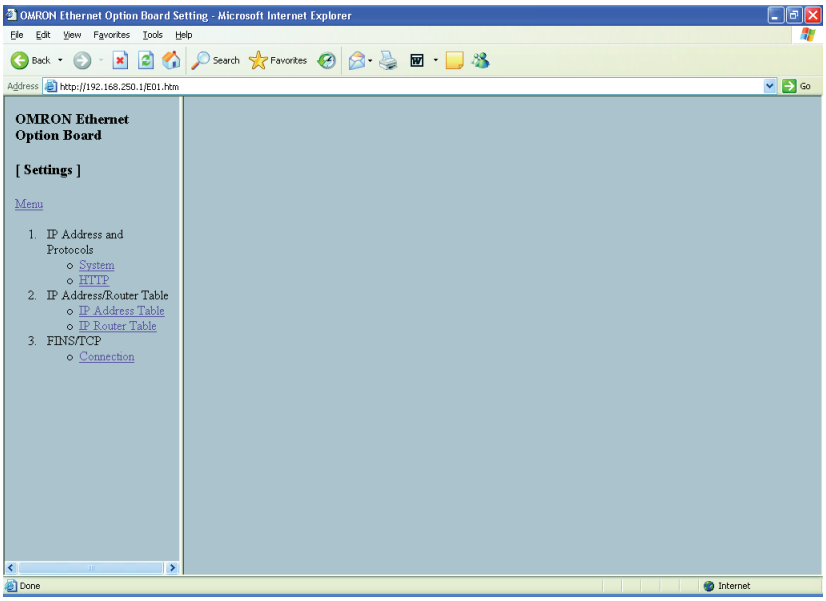

4. Select ***1. IP address and Protocols - System*** to display System menu.

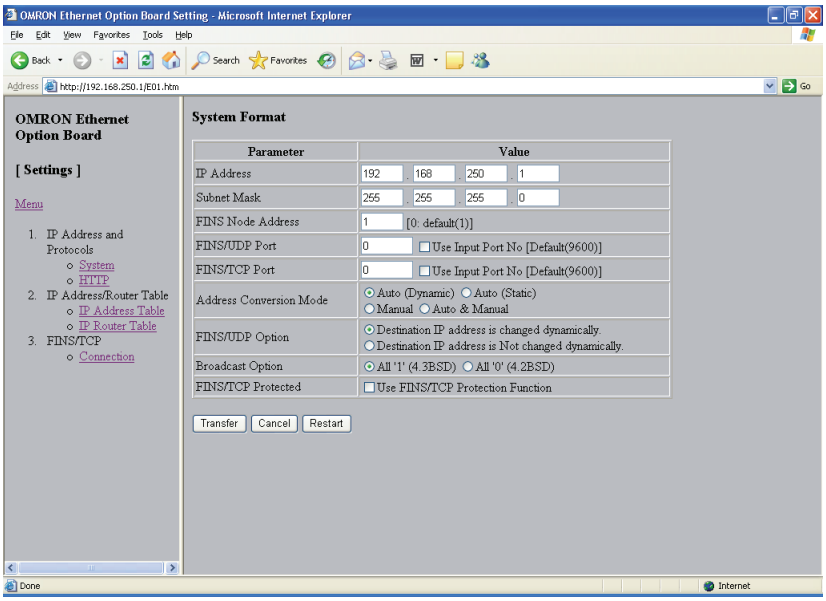

5. Make the required settings (i.e., the IP address in this example).

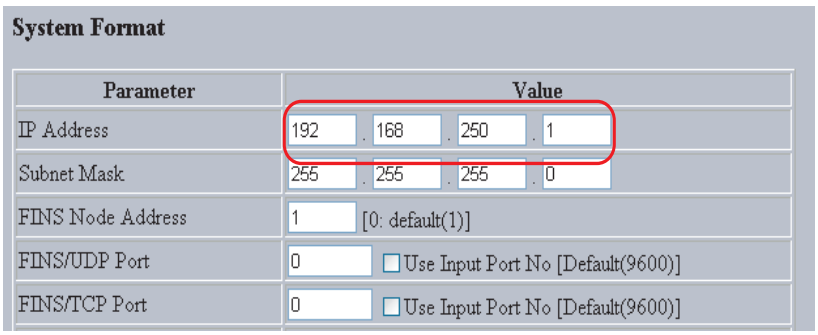

6. After entering the correct values, click the Transfer Button to transfer the settings to the Ethernet Option Board.

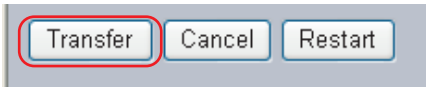

7. To enable the new settings, turn the power to the Ethernet Option Board OFF and ON again, or click the Restart Button.

9-9 Memory Allocations

9-9-1 CIO Area Allocation

The memory allocation about communication services status in the CIO area of PLC is shown as the following diagram. The beginning CIO channel m is calculated by the following equation:

m = CIO2980 + 10×(0xFD - Unit Address)

Offset	D15 D0
m	Service Status
m+1	Error Status
m+2	FINS/TCP Connection Status

The following table describes the unit address for each option port.

Option Port No.	I/O Capacity	Unit Address	Range of Status Area
Option port 1	14/20	0xFC	CIO2990 to CIO2992
	30/40/60	0xFD	CIO2980 to CIO2982
Option port 2	30/40/60	0xFC	CIO2990 to CIO2992

Service Status

	15	14	13	12	11	10	9	8	7	6	5	4	3	2	1	0
m	1		0	0	0	0	0	0	0	0	0	0	0	0	0	0

Bit	Name	Unit operation
0 to 13	Reserved	Always 0.
14	Link Status	0: The link between hubs is terminated. 1: A link is established between hubs.
15	Reserved	Always 1.

⚠ **Caution** Bit 15 is used for detect power condition of PLC, so do not change it at any time. Otherwise the CP1W-CIF41 Ethernet Option Board will generate error.

Error Status

The status of errors that occur at the Ethernet Option Board is reflected as shown in the following diagram.

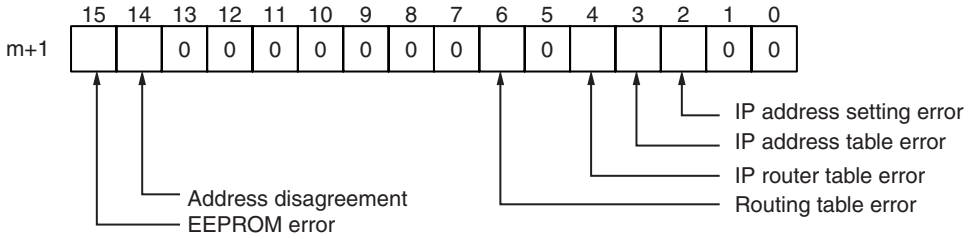

Bit	Name	Correction
0 to 1	Reserved	Always 0.
2	IP address setting error	The following cannot be used as IP address settings. • Host IDs that are all 0 or all 1. • Network IDs that are all 0 or all 1. • Subnetwork IDs that are all 1. • Addresses beginning with 127 (7F hex). Reset the IP address.
3	IP address table error	Correct the IP address table. If the problem cannot be resolved, replace the CPU Unit.
4	IP router table error	Correct the IP router table. If the problem cannot be resolved, replace the CPU Unit.
5	Reserved	Always 0.
6	Routing table error	Correct the routing tables. If the problem cannot be resolved, replace the CPU Unit.
7 to 13	Reserved	Always 0.
14	Address disagreement	Make sure that the node number and the last byte of the IP address are the same and then set other host IDs to 0. Change the address conversion method.
15	EEPROM error	Restart the PC. If the problem cannot be resolved, replace the Ethernet Option Board.

FINS/TCP Connection Status

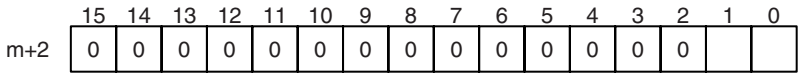

Bit	Switch	Unit operation
0	FINS/TCP Connection No.1	0: The connection is terminated. 1: A connection is established.
1	FINS/TCP Connection No.2	0: The connection is terminated. 1: A connection is established.
2 to 15	Reserved	Always 0.

9-9-2 DM Area Allocation

The memory allocation about system setup is shown as the following diagram. These data will be allocated to the DM area of PLC. The beginning DM channel n is calculated by the following equation.

Note 1. DM area from n to n+154 can only display all of the settings stared in the unit. Modification in this area is invalid to the CP1W-CIF41 Ethernet Option Board.

2. DM area n+155 and n+156 will display the IP address used by the CP1W-CIF41 when the power is turned ON.

3. When the IP address is illegal, such as using CLASS D, CLASS E IP address, the values in words n+3 and n+155 will be different, and the CP1W-CIF41 will temporarily use the default IP address (192.168.250.1). Use this IP address to modify the IP address settings through Web browser.

4. When the system settings are wrong, A525 can be used to reset CP1W-CIF41.
Refer to *Appendix C* and *Appendix D* for details.

n = DM32000 + 300×(0xFD - Unit Address)

Offset	D15 D0
n	Mode setting (2 bytes)
n+1	FINS/TCP port number (2 bytes)
n+2	FINS/UDP port number (2 bytes)
n+3	IP address (4 bytes)
n+5	Subnet mask (4 bytes)
n+7	Reserved (2 bytes)
n+8	IP address table (194 bytes)
n+105	IP router table (66 bytes)
n+138	FINS/TCP connection setup (22 bytes)
n+149	HTTP server setup (10 bytes)
n+154	FINS node address (2 bytes)
n+155	Using IP Address Display/Setting Area (4 bytes)

The following table describes the unit address for each option port.

Option Port No.	I/O Capacity	Unit Address	Range of Status Area
Option port 1	14/20	0xFC	DM32300 to DM32456
	30/40/60	0xFD	DM32000 to DM32156
Option port 2	30/40/60	0xFC	DM32300 to DM32456

Mode Setting

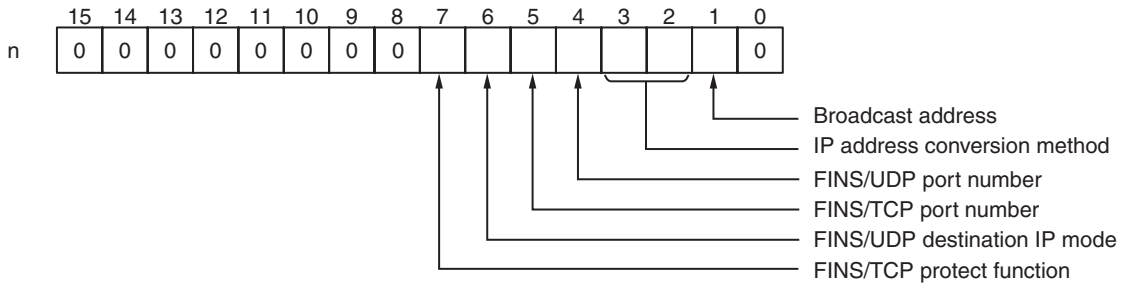

Bit	Mode	Settings
0	Reserved	Always 0.
1	Broadcast address	0: 4.3BSD specifications 1: 4.2BSD specifications
2 to 3	IP address conversion method	00, 01: Automatic generation method 10: IP address table reference method 11: Combined method
4	FINS/UDP port number	0: Default (9600) 1: Unit setup value
5	FINS/TCP port number	0: Default (9600) 1: Unit setup value
6	FINS/UDP destination IP mode	0: Enable (Dynamically) 1: Disable (Static)
7	FINS/TCP protect function	0: Disable (Only FINS/TCP Server) 1: Enable (Only FINS/TCP Server)
8 to 15	Reserved	Always 0.

FINS/TCP and FINS/UDP Port Number

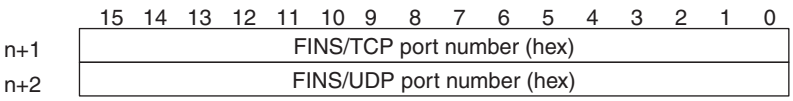

When displaying 0000, the port number is 9600.

IP Address

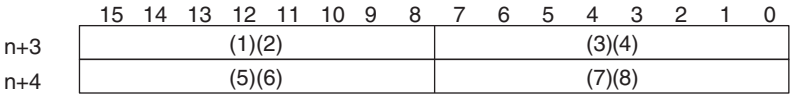

The IP address is (1)(2).(3)(4).(5)(6).(7)(8) (hex)

Subnet Mask

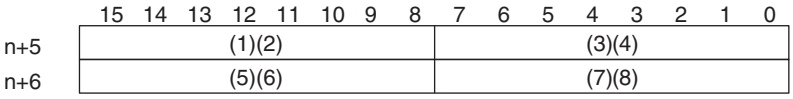

The Subnet mask is (1)(2).(3)(4).(5)(6).(7)(8) (hex)

IP Address Table

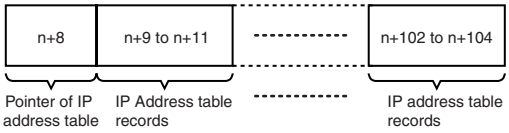

Pointer of IP Address Table

Point to the last recorder in IP address table. For example, if the last recorder number in IP address table is 6, the value of this channel is 6.

IP Address Table Records

Each IP address table record has 6 bytes. The max number of records is 32. The configuration of the 6 bytes of data in each record is as shown in the following diagram.

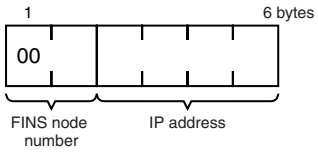

IP Router Table

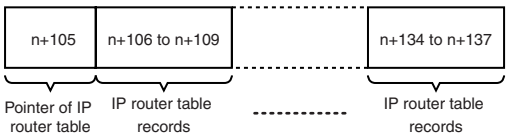

Pointer of IP Router Table

Point to the last recorder in IP router table. For example, if the last recorder number in IP router table is 6, the value of this channel is 6.

IP Router Table Records

Each IP router table record has 8 bytes. The max number of records is 8. The configuration of the 8 bytes of data in each record is as shown in the following diagram.

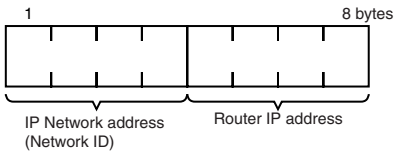

FINS/TCP Connection Setup

Offset	15 8	7 0
n+138	FINS/TCP Port Settings	
n+139	FINS/TCP connection No.1	FINS/TCP connection No.1
n+140	FINS/TCP connection No.1	FINS/TCP connection No.1
n+141	FINS/TCP connection No.1	FINS/TCP connection No.2
n+142	FINS/TCP connection No.2	FINS/TCP connection No.2
n+143	FINS/TCP connection No.2	FINS/TCP connection No.2
n+144	Reserved (Always 0)	
⋮		
n+148		

FINS/TCP Port Settings

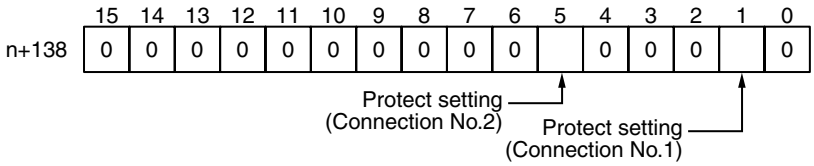

Bit	Settings	Unit operation
0	Reserved	Always 0.
1	Protect setting	0: The IP address of FINS/TCP connection No.1 is not under the protection. 1: The IP address of FINS/TCP connection No.1 is under the protection.
2 to 4	Reserved	Always 0.
5	Protect setting	0: The IP address of FINS/TCP connection No.2 is not under the protection. 1: The IP address of FINS/TCP connection No.2 is under the protection.
6 to 15	Reserved	Always 0.

FINS/TCP Connection No.1 to 2

Each FINS/TCP connection number has 5 bytes. The configuration of the 5 bytes of data in each number is as shown in the following diagram.

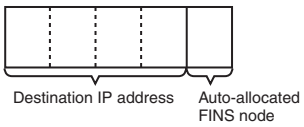

HTTP Server Setup

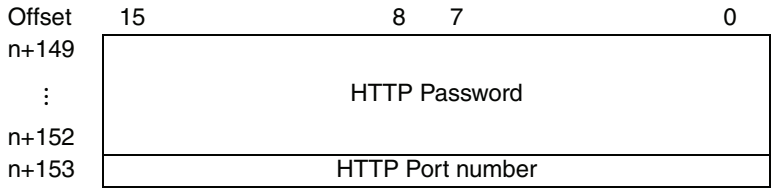

If the password for accessing the Ethernet Option Board's Web page is forgotten, find out it in this area. It is written in ASCII format.

FINS Node Address

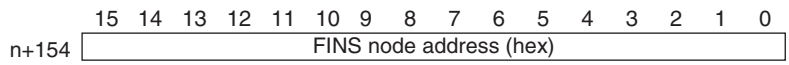

The setting range is 0~ FE (hex).

Using IP Address Display/Setting Area

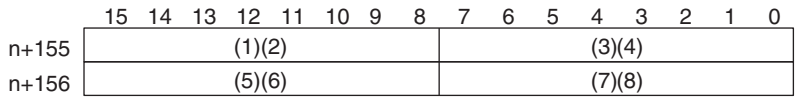

The IP address is (1)(2).(3)(4).(5)(6).(7)(8) (hex)

If the local IP address in the system setup is set to a value other than 0.0.0.0, this area will act as an IP address display area and the local IP address in the system setup will be read and stored here when the power is turned ON or the Ethernet Option Board restarted.

If the local IP address in the system setup is set to 0.0.0.0, this area will act as an IP address setting area. The value will be read by the Ethernet Option Board when the power is turned ON or the Ethernet Option Board restarted and is used as the local IP address.

If the IP address for accessing the Ethernet Option Board through Web browser is forgotten, find out it in this area.

Note When IP address in system setup area and DM area are all set to 0.0.0.0, the IP address will be 192.168.250.1 (FINS node address).

9-10 Web Browser Setup and Display

9-10-1 Multi-language Function

The WEB server supports the multi-language function. The supported languages are English, Chinese and Japanese.

Before setting, users should select the appropriate language in the following ULC.

English page: http://(Ethernet Option Board's IP address)/E00.htm

Japanese page: http://(Ethernet Option Board's IP address)/J00.htm

Chinese page: http://(Ethernet Option Board's IP address)/C00.htm

9-10-2 Overview of Web Browser Function

System setup for the Ethernet Option Board is as follows.

Setting Item		Reference Page
System	IP Address	578
	Subnet Mask	578
	FINS Node Address	578
	FINS/UDP Port	578
	FINS/TCP Port	578
	Address Conversion Mode	578
	FINS/UDP Option	578
	Broadcast Option	579
	FINS/TCP Protected	579
HTTP	WEB Password	580
	Port No.	580
IP Address Table	FINS Node Address	581
	IP Address	581
IP Router Table	IP Network Address	582
	Router IP Address	582
FINS/TCP	IP Address	583
	Auto-allocated FINS Node	583

Monitor status for the Ethernet Option Board is as follows.

Status	Reference Page
Unit information	584
Unit status	585
FINS status	586
Error log	587

9-10-3 System

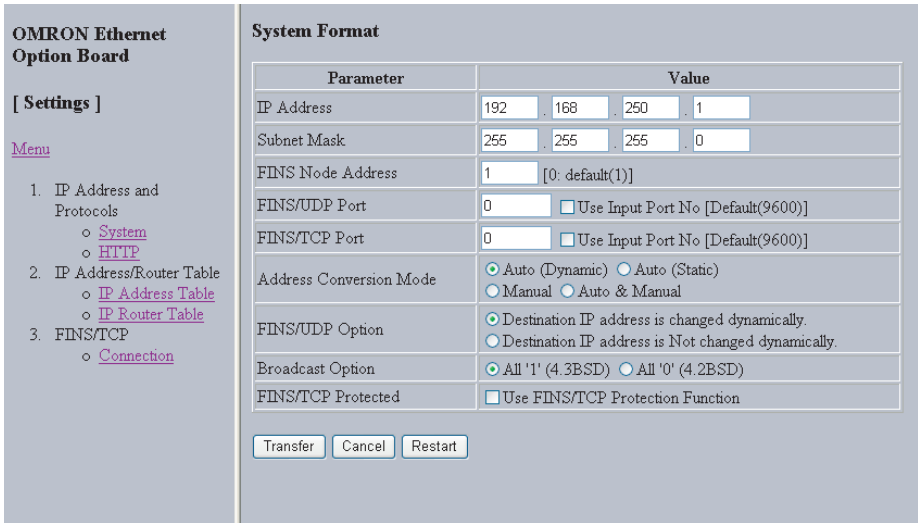

System Format

Item	Contents	Default
IP Address	Set the local IP address for the Ethernet Option Board. • Setting range: 00.00.00.00 to 223.255.255.255	192.168.250.1
Subnet Mask	Set the subnet mask for the Ethernet Option Board. This is required if a method other than the IP address table method is used for address conversion.	255.255.255.0
FINS Node Address	Set the local FINS node address for the Ethernet Option Board. • Setting range: 1 to 254	1
FINS/UDP Port	Specify the local UDP port number to be used for the FINS communications service. The UDP port number is the number used for UDP identification of the application layer (i.e., FINS communications service). • Setting range: 1 to 65,535	9,600
FINS/TCP Port	Specify the local TCP port number to be used for the FINS communications service. The TCP port number is the number used for TCP identification of the application layer (i.e., the FINS communications service in this case). • Setting range: 1 to 65,535 **Note** Make the settings so that TCP port number 80 for HTTP does not overlap. The port number setting only has an effect on the FINS/TCP server function, not on the FINS/TCP client function. FINS/TCP client port will switch from 3000 to 65535 automatically for connection.	9,600
Use Input Port No.	Check this checkbox, if you want the user defined port number for UDP or TCP to be in effect.	Unchecked
Address Conversion Mode	Select any of the following as the method for finding and converting IP addresses from FINS node addresses. (Enabled for FINS/UDP only.) • Auto (dynamic): Automatic generation (dynamic) • Auto (static): Automatic generation (static) • Manual: IP address table method • Auto & Manual: Combined method	Auto (dynamic)
FINS/UDP Option	Select to dynamically change the remote (destination) IP address for FINS/UDP or not. To prohibit dynamic changes, check the second box.	Change dynamically

Item	Contents	Default
Broadcast Option	Set the method for specifying IP addresses for broadcasting in FINS/UDP. • All ‘1’ (4.3BSD): Broadcast with host number set to all ones. • All ‘0’ (4.2BSD): Broadcast with host number set to all zeros. Normally the default setting should be used.	All ‘1’ (4.3BSD)
FINS/TCP Protected	When this option is selected, if the FINS/TCP connection is set to a server, and if an IP address other than 0.0.0.0 is set to destination IP address, any connection request from other than the setting IP address will be denied. Select this option to prevent faulty operation (by FINS commands) from specific nodes from affecting the PLC.	Unchecked

The functions of the buttons are as follows.

Button	Function
Transfer	Transfer the entered values from the personal computer to the Ethernet Option Board. (The new settings are invalid until the Ethernet Option Board has been reset.)
Cancel	Cancel the entered values.
Restart	Restart the Ethernet Option Board to enable the new settings after transfer. The Restart button is invalid to the PLC.

9-10-4 HTTP

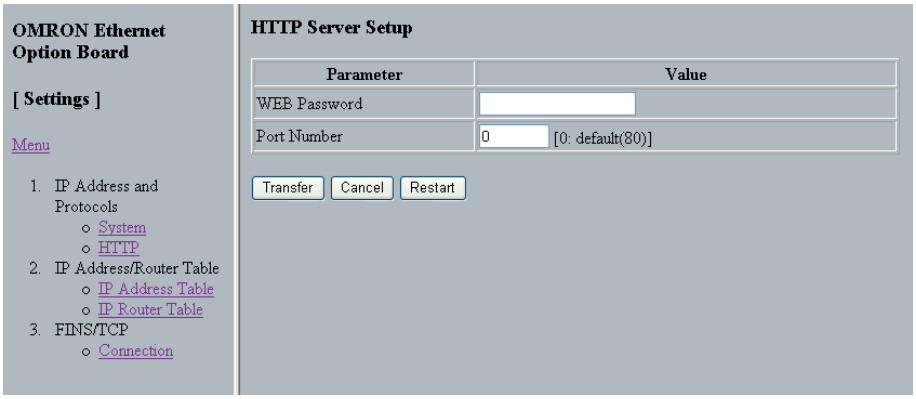

HTTP Server Setup

Item	Contents	Default
WEB Password	Set the password for accessing the Ethernet Option Board's settings and status monitoring information.	ETHERNET
Port Number	Set the port No. used to connect to the Web browser.	80

The functions of the buttons are as follows.

Button	Function
Transfer	Transfer the entered values from the personal computer to the Ethernet Option Board. (The new settings are invalid until the Ethernet Option Board has been reset.)
Cancel	Cancel the entered values.
Restart	Restart the Ethernet Option Board to enable the new settings after transfer. The Restart button is invalid to the PLC.

9-10-5 IP Address Table

Set the IP address table that defines the relationship between FINS node addresses and IP addresses. With FINS/UDP, this is enabled only when the IP address table method is set to the IP address conversion method.

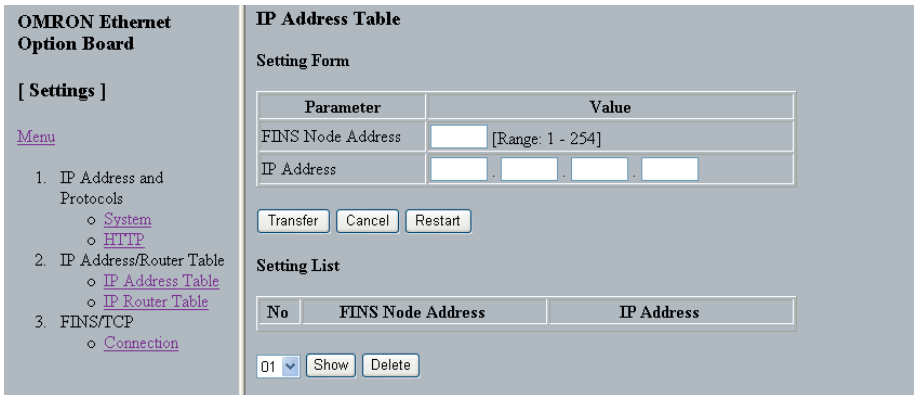

Item	Contents	Default
FINS Node Address	Set the node address for the remote device.	None
IP Address	Set the related IP address for the remote device.	None

The functions of the buttons are as follows.

Button	Function
Transfer	Transfer the entered values from the personal computer to the Ethernet Option Board. (The new settings are invalid until the Ethernet Option Board has been reset.)
Cancel	Cancel the entered values.
Restart	Restart the Ethernet Option Board to enable the new settings after transfer. The Restart button is invalid to the PLC.
Show	Show the FINS node address and IP address of the selected No.
Delete	Delete the IP address table of the selected No.

9-10-6 IP Router Table

Set the IP router table when the Ethernet Option Board is to communicate through the IP router with nodes on another IP network segment.

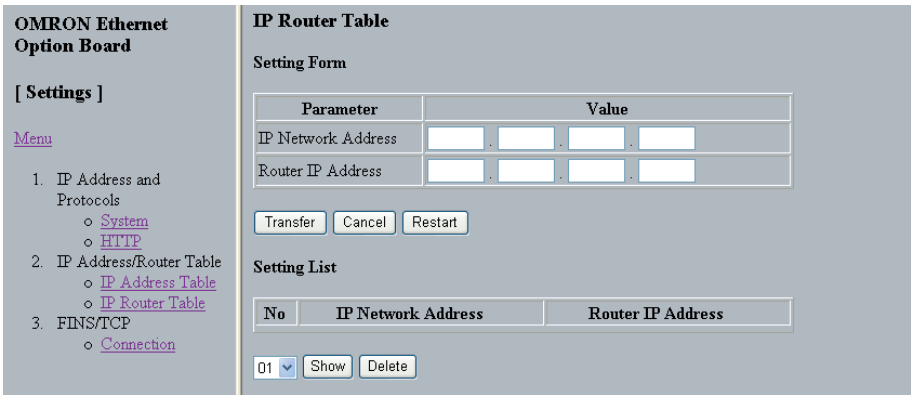

Item	Contents	Default
IP Network Address	Set the network ID from the IP address.	None
Router IP Address	Set the related IP address of a router connected to a network.	None

The functions of the buttons are as follows.

Button	Function
Transfer	Transfer the entered values from the personal computer to the Ethernet Option Board. (The new settings are invalid until the Ethernet Option Board has been reset.)
Cancel	Cancel the entered values.
Restart	Restart the Ethernet Option Board to enable the new settings after transfer. The Restart button is invalid to the PLC.
Show	Show the IP network address and Router IP address of the selected No.
Delete	Delete the IP router table of the selected No.

9-10-7 FINS/TCP

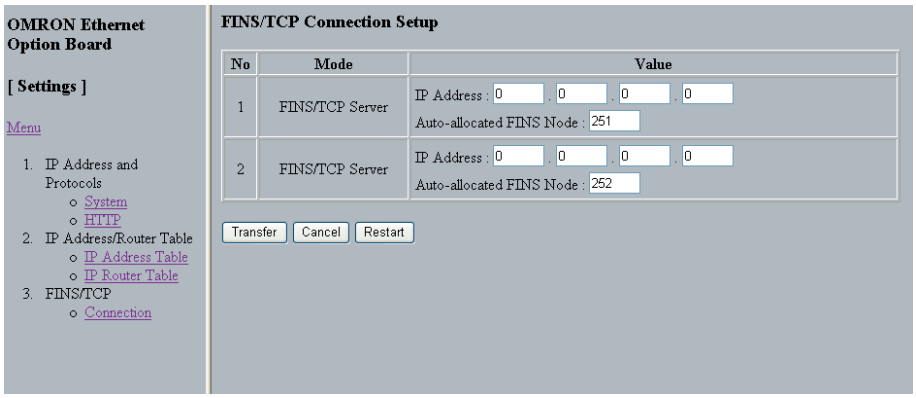

FINS/TCP Connection Setup

Item	Contents	Default
No.	Shows the connection number. This is a network API used when TCP is used for the FINS communications service. Up to 2 can be used at a time, and they are identified by connection numbers 1 to 2. The Ethernet Option Board can thus simultaneously execute the FINS communications service by TCP with up to 2 remote nodes.	---
IP Address	• When the Ethernet Option Board is used as a server: If the option is selected to use IP addresses to protect, set the IP addresses as required at clients from which connection is permitted. If not set for those connections, the default setting can be used. • When the Ethernet Option Board is used as a client: Set the IP address for the remote Ethernet Unit (i.e., the server) that is to be connected by FINS/TCP. It is required that an IP address be set for the remote Ethernet Unit.	0.0.0.0
Auto-allocated FINS node	If the client (normally a personal computer) application supports FINS/TCP, and if FINS node addresses are not fixed, the client will take 0 as its node address. Then, when a FINS command arrives, the number set here (from 251 to 252) will automatically be allocated as the client's FINS node address.	From 251 to 252, for connection No. 1 to 2

The functions of the buttons are as follows.

Button	Function
Transfer	Transfer the entered values from the personal computer to the Ethernet Option Board. (The new settings are invalid until the Ethernet Option Board has been reset.)
Cancel	Cancel the entered values.
Restart	Restart the Ethernet Option Board to enable the new settings after transfer. The Restart button is invalid to the PLC.

9-10-8 Unit Information

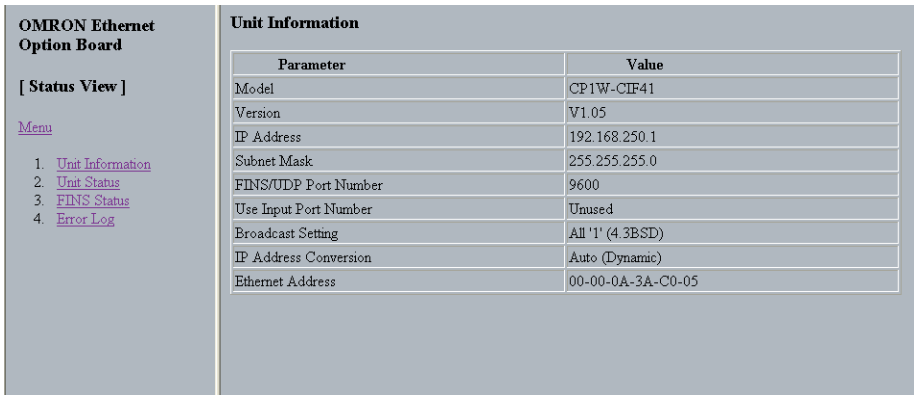

Parameter	Contents
Model	Show the model information of the Ethernet Option Board.
Version	Show the version information of the Ethernet Option Board.
IP Address	Show the IP address of the Ethernet Option Board.
Subnet Mask	Show the subnet mask of the Ethernet Option Board.
FINS/UDP Port Number	Show the FINS/UDP port number of the Ethernet Option Board.
Use Input Port Number	Show the effective port number setting mode.
Broadcast Setting	Show the broadcast setting of the Ethernet Option Board.
IP Address Conversion	Show the IP address conversion method of the Ethernet Option Board.
Ethernet Address	Show the MAC ID of the Ethernet Option Board.

9-10-9 Unit Status

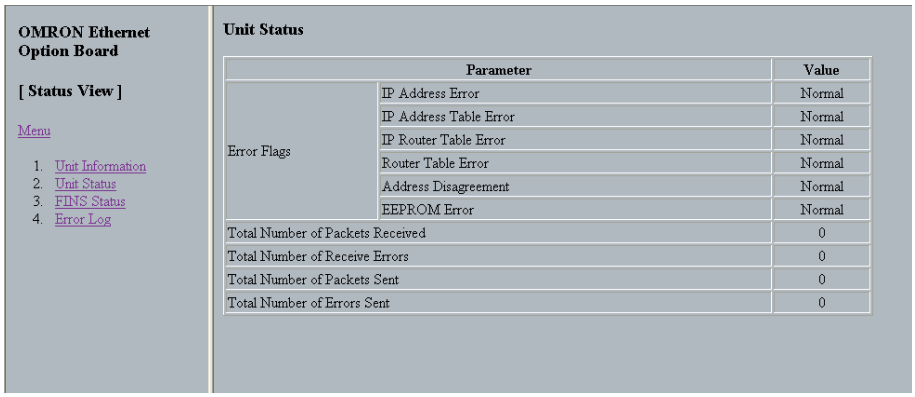

Parameter	Contents
Error Flags	Indicate the operating status and errors that occurred when the Ethernet Option Board is turned ON.
Total Number of Packets Received	Show the total number of packets received by the Ethernet Option Board.
Total Number of Receive Errors	Show the total number of errors detected while the Ethernet Option Board was receiving. The types of errors detected are short packet errors, alignment errors, CRC errors, frame length errors and communication controller overflow errors.
Total Number of Packets Sent	Show the total number of packets sent by the Ethernet Option Board.
Total Number of Errors Sent	Show the total number of errors detected while the Ethernet Option Board was sending.

9-10-10 FINS Status

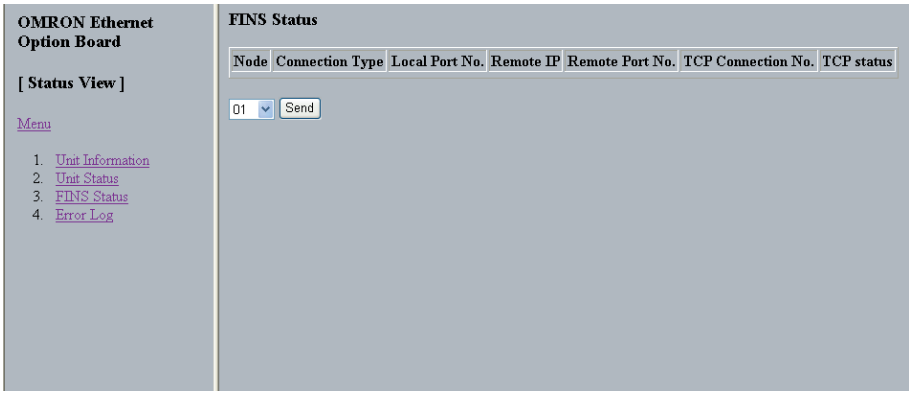

Parameter	Contents
Node	Show the FINS node address.
Connection Type	Show the protocol used by connection with the related node address.
Local Port No.	Show the port number of the Ethernet Option Board for connection with the related node address.
Remote IP	Show the IP address of the related node address.
Remote Port No.	Show the remote port number of the related node address for connection.
TCP Connection No.	If the connection is the FINS/TCP, show the connection number (1 to 4).
TCP Status	If the connection is the FINS/TCP, show the current connection status.

The details of TCP status are listed as the following table.

Status	Meaning
CLOSED	Connection closed
LISTEN	Waiting for connection
SYN SENT	SYN sent in active status
SYN RECEIVED	SYN received and sent
ESTABLISHED	Already established
CLOSE WAIT	FIN received and waiting for completion
FIN WAIT1	Completed and FIN sent
CLOSING	Completed and exchanged FIN. Awaiting ACK.
LAST ACK	FIN sent and completed. Awaiting ACK.
FIN WAIT2	Completed and ACK received. Awaiting FIN.
TIME WAIT	After closing, pauses twice the maximum segment life (2MSL).

The function of the button is as follows.

Button	Function
Send	Show the FINS status of the selected No.

9-10-11 Error Log

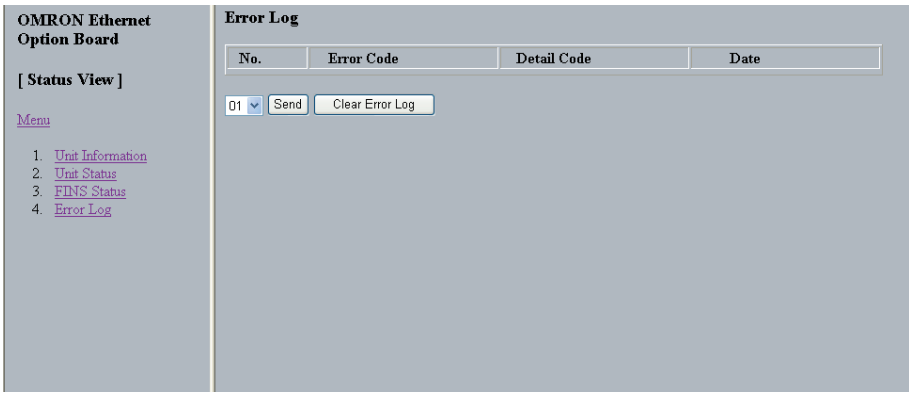

Parameter	Contents
No.	Show the error recorder number.
Error Code	Show the error code of the error recorder.
Detail Code	Show the detail error code of the error recorder.
Date	Show the date of the error recorder.

The functions of the buttons are as follows.

Button	Function
Send	Show the error log of the selected No.
Clear Error Log	Clear the error log table.

9-11 Trouble Shooting

9-11-1 Error Log

The Ethernet Option Board provides an error log that records errors occurred during Ethernet Option Board operation. The contents of the error log can be read or cleared from the Web Brower.

Logged Errors

The following errors are recorded in the error log.

- Errors in network operation
- Errors in data transfers
- Error in the CPU unit

Error Log Table

Each error is recorded as one record in an error log table. Up to 20 records can be saved. If more than 20 errors occur, the oldest errors will be deleted from the error log and the most recent error will be recorded.

The following information is recorded in the error log table.

- Main error code (see table later in this section)
- Detailed error code (see table later in this section)
- Time stamp (from the clock in the CPU unit)

Note During the initialization of the Ethernet Option Board, if an error occurs, the error log time stamp will record as 2000-00-00 00:00:00.

Error Log Location

When an error is detected, the error codes and time stamp are recorded in the error log in RAM inside the Ethernet Option Board. Serious errors are also recorded in EEPROM. The maximum number of errors that can be saved to EEPROM is 20 for the CP1L and CP1H. The errors recorded in EEPROM will be saved even if the unit is restarted or power is turned OFF.

Error Codes

Error code	ERR LED	Meaning	Detailed error code		Correction	EEPROM
			1st byte	2nd byte		
0002	LIT	CPU Unit service monitoring error	Monitor time (ms)		Check and correct the CPU Unit's operating environment. **Note** Recovery is possible for this error. When operation is restored, operations will return to normal.	Saved
0015	FLASH	CPU Unit fatal error			Eliminate the cause of the error in the CPU Unit.	---
010E	---	No routing table entry (send failed)	Commands Bit 15: OFF Bits 08 to 14: SNA Bits 00 to 07: SA1 Responses Bit 15: ON Bits 08 to 14: DNA Bits 00 to 07: DA1		Set the local node, remote node, and relay nodes in the routing tables.	---
010F	---	Routing table error (send failed)			Create the routing tables correctly.	---
0110	---	Too many relay points (send failed)			Reconstruct the network or correct the routing tables so that commands are sent to within a 3- level network range.	---
0111	---	Command too long (send failed)			Check the command format and set the correct command data.	---
0112	---	Header error (send failed)			Check the command format and set the correct command data.	---
0117	---	Internal buffers full; packet discarded			Change the network so that traffic is not concentrated.	---
0120	---	Unexpected routing error			Check the routing tables.	---
0123	---	Internal send buffers full; packet discarded			Change the network so that traffic is not concentrated.	---
0125	---	Time out error			Resend the command.	---
021A	FLASH	Logic error in setting table	00	02: Network parameters 03: Routing tables 04: Unit Setup 05: CPU Bus Unit Words (CIO/DM)	Recreate the data specified by the 2nd byte of the detailed error code.	Saved

Error code	ERR LED	Meaning	Detailed error code		Correction	EEPROM
			1st byte	2nd byte		
03C0	FLASH	FINS/TCP setting error	01 to 02: Connection No.	01: Automatically allocated FINS node address duplication 02: Destination IP address error 03: Destination port number error	Set the FINS/TCP settings correctly.	---
03C2	---	FINS/TCP packet discarded	01 to 02: Connection No.	03: Reception error 04: Transmission error	Resend the command.	---
					There is too much load (traffic) on the Ethernet Option Board. Correct the system so that traffic is not concentrated.	---
03C3	---	FINS/UDP Packet discarded	00	01 to FE Node address	The automatic generation (static) method was used as the IP address conversion method, so remote IP address information in internal memory could not be changed.	---
03C8	---	Socket Error	Arbitrary		Resend the packet or the destination node is not in the network.	---
03D0	FLASH	System setup sum value error			Reset the value of system setup area, Restart CPU Unit.	Saved
0601	LIT	Option Board error	Arbitrary		Restart the CPU Unit. If the problem persists, replace the Ethernet Option Board.	Saved
0602	LIT	Option Board memory error	01: Read error 02: Write error	06: Error log	Restart the CPU Unit. If the problem persists, replace the Ethernet Option Board.	Saved (except error log)

9-11-2 Trouble-shooting with Indicators and Error Code Display

ERR Indicator	Error	Probably Cause	Error code (hex)	Correction
Lit	CPU Unit service monitoring error	Service from the CPU Unit was not completed within the fixed interval. The monitoring time is normally 11s.	0002	Check and correct the CPU Unit's operating environment. Check whether the related DIP SW is on. Refer to *9-8-2 Installation and Removing*. **Note** Recovery is possible for this error. When operation is restored, it will return to normal.
	Two option boards (unit version 1.0) installed	Two option boards have been installed on the CPU Unit.	---	Uninstall the Ethernet Option Board in one serial port of the CPU Unit and restart the CPU unit.
	Option board error	An error occurred in the Ethernet Option Board.	0601	Restart the CPU Unit. Replace the Ethernet Option Board if the error recurs.
	Option board memory error	An error occurred in the Unit's non-volatile memory itself. This error will occur while writing or reading the error log, system setup, identity data, MAC ID.	0602	Restart the CPU Unit. Replace the Ethernet Option Board if the error recurs.
Flashing	CPU Unit fatal error	A fatal error occurred in the CPU Unit.	0015	Eliminate the cause of the error in the CPU Unit.
	IP address setting error	The IP address is set incorrectly.	021A	Correct the IP address. Do not set any of the following IP addresses. • Host IDs that are all 0 or all 1. • Network IDs that are all 0 or all 1. • Subnetwork IDs that are all 1. • Addresses beginning with 127 (7F hex).
	IP address table error	The IP address table is set incorrectly.	021A	Correct the IP address table.
	IP Router table setting error	The IP Router table is set incorrectly.	021A	Correct the IP Router table.
	Address Disagreement	The node number set for the option board does not agree with the host ID in the IP address. This probably occurs when the address conversion method is set for automatic address generation.	021A	Make sure that the node number and the last byte of the IP address are the same and then set other host IDs to 0. Change the address conversion method.
	Logic error in setting table	There is a logic error in the setting table.	021A	Recreate the data specified by the 2nd byte of the detailed error code.
	System setup Sum check error	The Checksum of System setup is incorrect.	03D0	Reset the value of system setup area. Restart the CPU Unit.
	FINS/TCP setting error	The settings of FINS/TCP are incorrect.	03C0	Refer to operation manual and set the FINS/TCP setting correctly.

9-11-3 Error Status

The status of errors that occur at the Ethernet Option Board is reflected in CIO relation area, Refer to *9-9-1 CIO Area Allocation, Error Status* for details.

9-12 Sample Application

The following examples show how to connect online from a CX-Programmer on an Ethernet network to a PLC on the Ethernet network.

Note Please use CX-Programmer version 8.1 or higher (CX-ONE version 3.1 or higher).

■ System Configuration Example 1: No Routing

In this example, an online connection is made by FINS/UDP to a PLC on an Ethernet network (PLC1 in the diagram below) from a CX-Programmer / CX-Integrator connected to the Ethernet network.

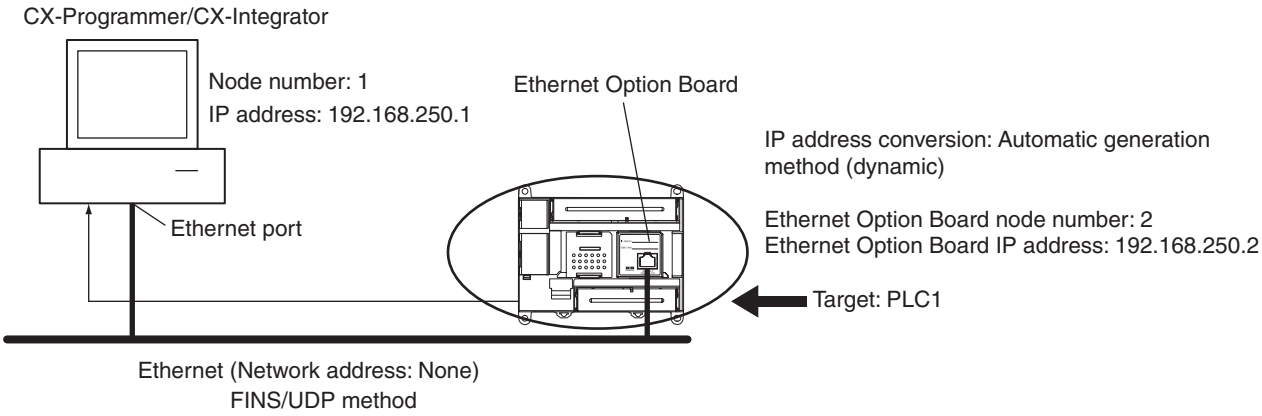

Web Browser Setting

Item	Setting
Broadcast	All ones (4.3BSD)
FINS/UDP port	Default (9600)
IP address	192.168.250.2
Subnet mask	255.255.255.0
FINS Node Address	2
IP address conversion	Automatic generation method (dynamic)
Baud rate	Automatic Detaction
IP router tabel	None

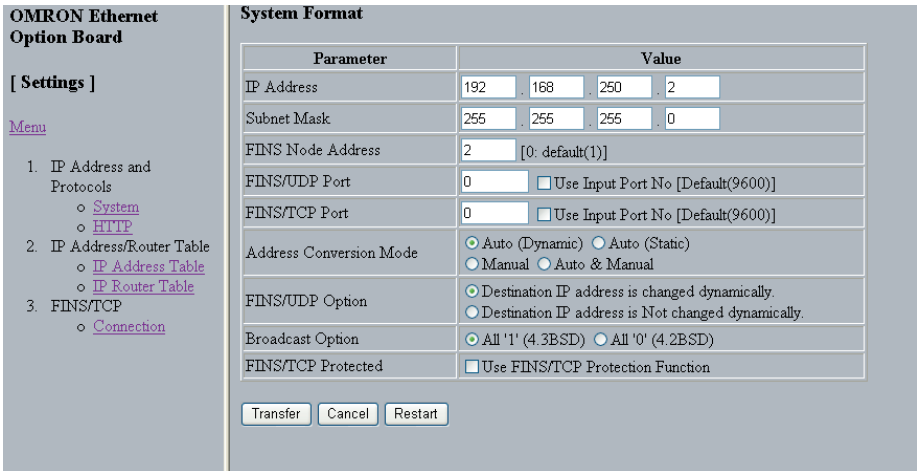

CX-Programmer's Change PLC Dialog Box

Item			Setting
PLC name			PLC1
Network classification			Ethernet
Network Tab	FINS transmission source address		0
	FINS destination	Network number	0
		Node address	2
	Frame length		1,004bytes
	Response monitor time		5 seconds
Driver Tab	Workstation node address		1
	Automatic generation method		Not selected
	Ethernet Option Board IP address		192.168.250.2
	Port number		9600

Note Limited by the CP1W-CIF41 inner bus protocol (Toolbus), the frame length and response monitor time are different from the existing Ethernet unit.

Inputs to the CX-Programmer's Setup Window

Change PLC Settings

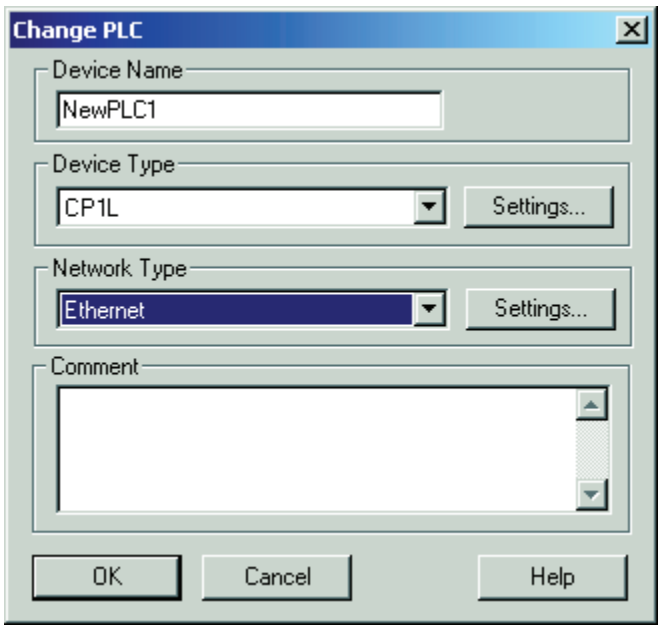

Network Settings (Network Tab)

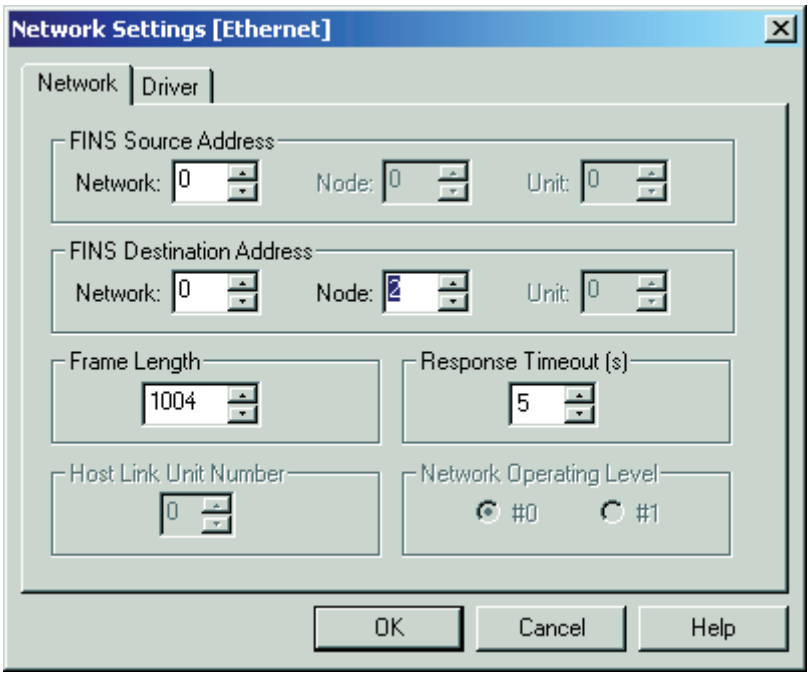

Network Settings (Driver Tab)

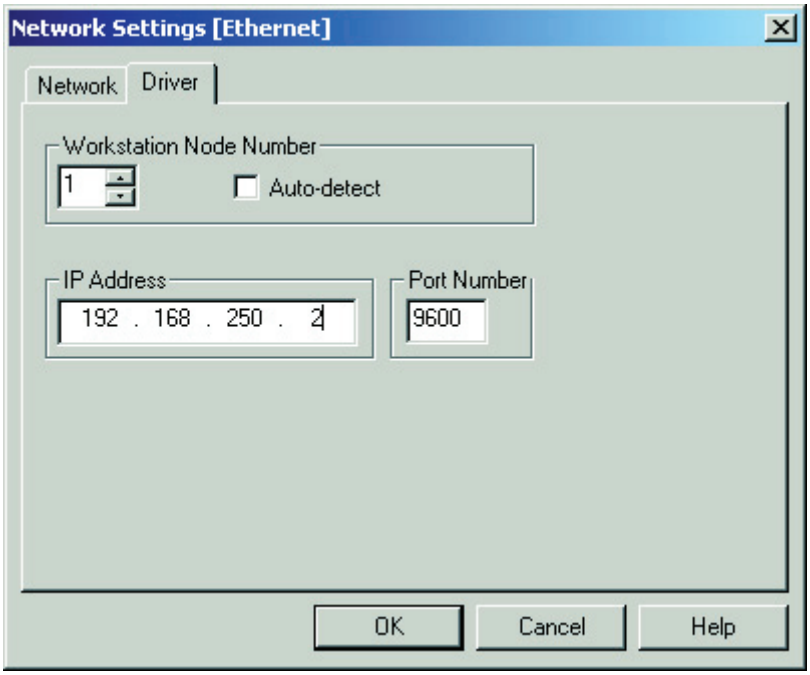

■ System Configuration Example 2: Using Routing Tables

In this example, an online connection is made via the Ethernet to a PLC on a Controller Link network (PLC3 in the diagram below) from a CX-Programmer / CX-Integrator connected to the Ethernet network.

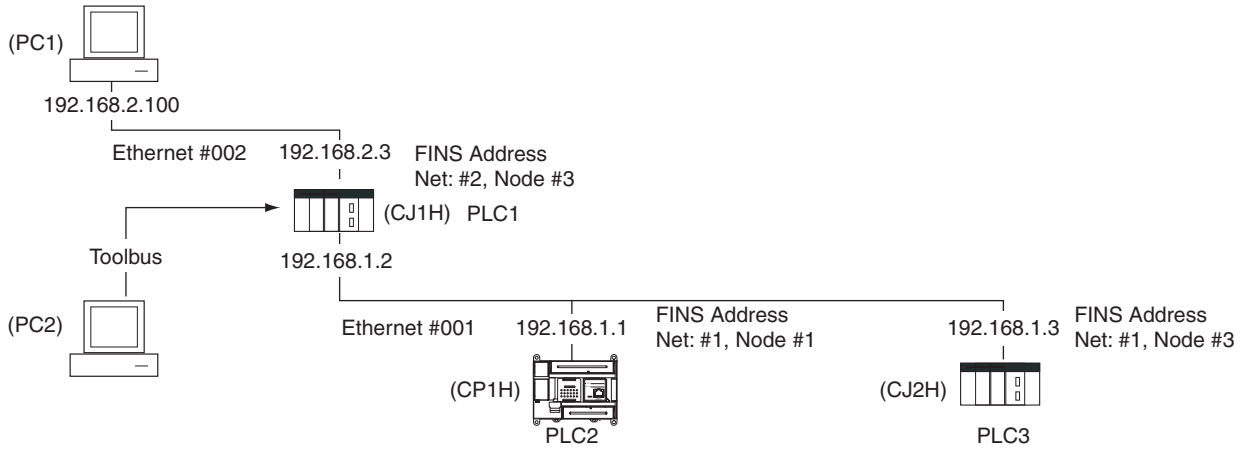

Web Browser Setting

Same as for *System Configuration Example 1*.

CX-Programmer's Change PLC Dialog Box

Settings for target PLC (PLC1)'s Change PLC Dialog Box			Setting
PLC name			PLC2
Network classification			PLC1
Network Tab	FINS transmission source address		2
	FINS destination	Network number	1
		Node address	1
	Frame length		542bytes (default)
	Response monitor time		5 seconds

Routing Table Settings and Transfer to Each PLC

Set the routing tables with CX-Integrator, and transfer them.

1,2,3... 1. Using CX-Integrator, connect online, and select ***Routing table - Settings***. Then create FINS local routing tables (a local network table and a relay network table).

Example: PLC 1 Routing Table Settings

• Local Network Table

Unit number	Local network number
0	1
1	2

• Relay Network Table (None)

Example: PLC 2 and PLC 3 Routing Table Settings

• Local Network Table

Option port No.	I/O capacity	Unit address	Local network number
Option port 1	14/20	252(0xFC hex)	1
	30/40/60	253(0xFD hex)	1
Option port 2	30/40/60	252(0xFC hex)	1

• Relay Network Table

In order to relay from PLC2/3 to the final network number 2, it is necessary to relay via node address 1 on relay network number 2.

Final network number	Relay network number	Relay node address
2	1	2

2. Save the routing table file (File - Save local routing table file).
3. Select ***New*** from the Project Menu, and save with a file name. Then select ***Add Device*** from the Project Menu. For each PLC, register a PLC with a direct serial connection (node address: 0), and select it.
4. With CX-Integrator, select ***Open*** from the PLC Menu.
5. Select ***Routing table - Setup***, read the saved file, and select ***Options - Transfer to PLC***. Click **Yes** to transfer the routing tables to the connected PLCs.

SECTION 10
Program Transfer, Trial Operation, and Debugging

This section describes the processes used to transfer the program to the CPU Unit and the functions that can be used to test and debug the program.

10-1 Program Transfer 598
10-2 Trial Operation and Debugging 598
10-2-1 Forced Set/Reset 598
10-2-2 Differential Monitoring 599
10-2-3 Online Editing 600
10-2-4 Tracing Data 602

10-1 Program Transfer

The CX-Programmer is used to transfer the programs, PLC Setup, I/O memory data, and I/O comments to the CPU Unit with the CPU Unit in PROGRAM mode. The following procedure is used.

1,2,3...

1. Select ***PLC - Transfer - To PLC.*** The Download Options Dialog Box will be displayed.
2. Specify the items to transfer.
3. Click the **OK** Button.

Note The program data on a Memory Cassette can be automatic transferred when the power is turned ON.

10-2 Trial Operation and Debugging

10-2-1 Forced Set/Reset

The CX-Programmer can force-set (ON) or reset (OFF) specified bits in the CIO Area, Auxiliary Area, and HR Area, as well as timer/counter Completion Flags. Forced status will take priority over status output from the program or I/O refreshing. This status cannot be overwritten by instructions, and will be stored regardless of the status of the program or external inputs until it is cleared from the CX-Programmer.

Force-set/reset operations are used to force input and output during a trial operation or to force certain conditions during debugging.

Force-set/reset operations can be executed in either MONITOR or PROGRAM modes, but not in RUN mode.

Note Turn ON the Forced Status Hold Bit (A500.13) and the IOM Hold Bit (A500.12) at the same time to retain the status of bits that have been force-set or reset when switching the operating mode.
Turn ON the Forced Status Hold Bit (A500.13) and the IOM Hold Bit (A500.12), and set the Forced Status Hold Bit at Startup parameter in the PLC Setup to retain the status of the Forced Status Hold Bit hold to retain the status of bits that have been force-set or reset when turning OFF the power.

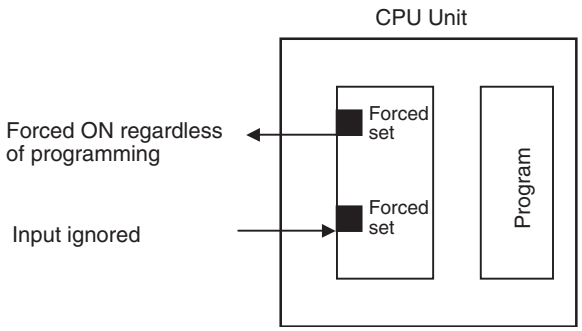

The following areas can be force-set and reset: CIO Area, Work Area, Timer Completion Flags, HR Area, Counter Completion Flags.

CX-Programmer Operation

- Selecting bits for forced setting/resetting
- Selecting forced set or forced reset status
- Clearing forced status (also clearing all forced status at the same time)

10-2-2 Differential Monitoring

When the CPU Unit detects that a bit set by the CX-Programmer has changed from OFF to ON or from ON to OFF, the results are indicated in the Differentiate Monitor Completed Flag (A508.09). The Flag will turn ON when conditions set for the differential monitor have been met. The CX-Programmer can monitor and display these results on screen.

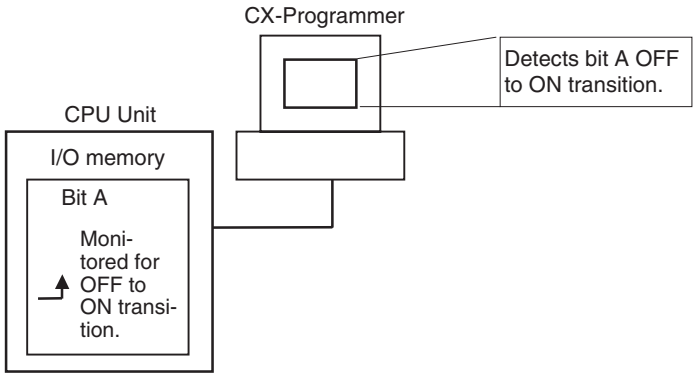

CX-Programmer Operation

1,2,3...

1. Right-click the bit for differential monitoring.
2. Click ***Differential Monitor*** from the PLC Menu. The Differential Monitor Dialog Box will be displayed.
3. Click ***Rising*** or ***Falling.***
4. Click the **Start** Button. The buzzer will sound when the specified change is detected and the count will be incremented.
5. Click the **Stop** Button. Differential monitoring will stop.

Related Auxiliary Bits/Words

Name	Address	Description
Differentiate Monitor Completed Flag	A508.09	Turns ON when the differential monitoring condition has been met during differential monitoring. Note: The flag will be cleared when differential monitoring is started.

10-2-3 Online Editing

The Online Editing function is used to add to or change part of a program in a CPU Unit directly from the CX-Programmer when the CPU Unit is in MONITOR or PROGRAM mode. This function is designed for minor program changes without stopping the CPU Unit.

Online editing is possible simultaneously from more than one computer running the CX-Programmer as long as different tasks are edited.

Online Editing

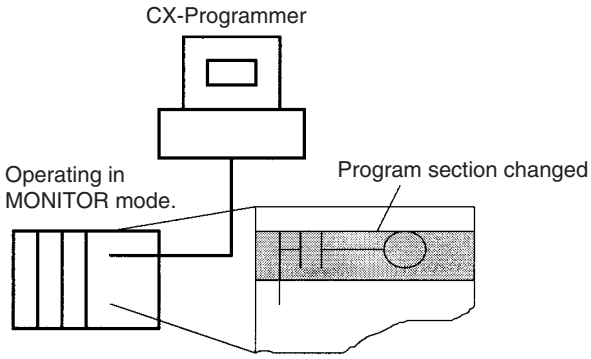

The cycle time will be increased by from one to several cycle times if the program in the CPU Unit is edited online in MONITOR mode. The cycle time will also be increased to back up data in the flash memory after online editing. The BKUP indicator will be lit during this period and the progress of the backup will be displayed on the CX-Programmer. The increases per cycle are listed in the following table.

CPU Unit	Increase in cycle time	
	Online editing	Backup to flash memory
CP1L CPU Units	16 ms max.	4% of cycle time

There is a limit to the number of edits that can be made consecutively. The actual number depends on the type of editing that is performed, but 40 edits should be used as a guideline. A message will be displayed on the CX-Programmer if the limit is exceeded, and further editing will not be possible until the CPU Unit has completed backing up the data.

The length of time that the cycle time is extended due to online editing is almost unaffected by the size of the task program being edited.

Precautions

The cycle time will be longer than normal when a program is overwritten using Online Editing in MONITOR mode, so make sure that the amount of time that it is extended will not exceed the cycle monitoring time set in the PLC Setup. If it does exceed the monitoring time, then a Cycle Time Over error will occur, and the CPU Unit will stop. Restart the CPU Unit by selecting PROGRAM mode first before changing to RUN or MONITOR mode.

Note If the task being edited online contains a block program, then previous execution information, such as Standby (WAIT) or Pause status, will be cleared by online editing, and the next execution will be from the beginning.

Online Editing from the CX-Programmer

1,2,3...

1. Display the program section that will be edited.
2. Select the instructions to be edited.
3. Select ***Program - Online Edit - Begin.***

4. Edit the instructions.
5. Select ***Program - Online Edit - Send Changes*** The instructions will be check and, if there are no errors, they will be transferred to the CPU Unit. The instructions in the CPU Unit will be overwritten and cycle time will be increased at this time.

⚠ **Caution** Proceed with Online Editing only after verifying that the extended cycle time will not adversely affect operation. Input signals may not be read if the cycle time is too long.

Temporarily Disabling Online Editing

It is possible to disable online editing for specific cycles to ensure response characteristics for machine control in those cycles. Online editing from the CX-Programmer will be disabled for those cycles and any requests for online editing received during those cycles will be held online editing is enables.

Online editing is disabled by setting the Online Editing Disable Bit Validator (A527.00 to A527.07) to 5A and then turning ON the Online Editing Disable Bit (A527.09). When these settings have been made and a request for online editing is received, online editing will be put on standby and the Online Editing Wait Flag (A201.10) will be turned ON.

When the Online Editing Disable Bit (A527.09) is turned OFF, online editing will be performed, the Online Editing Processing Flag (A201.11) will turn ON, and the Online Editing Wait Flag (A201.10) will turn OFF. When online editing has been completed, the Online Editing Processing Flag (A201.11) will turn OFF.

Online editing can also be temporarily disabled by turning ON the Online Editing Disable Bit (A527.09) while online editing is being performed. Here too, the Online Editing Wait Flag (A201.10) will turn ON.

If a second request for online editing is received while the first request is on standby, the second request will not be recorded and an error will occur.

Online editing can also be disabled to prevent accidental online editing. As described above, disable online editing by setting the Online Editing Disable Bit Validator (A527.00 to A527.07) to 5A and turning ON the Online Editing Disable Bit (A527.09).

Enabling Online Editing from the CX-Programmer

When online editing cannot be enabled from the program, it can be enabled from the CX-Programmer. If operations continue with online editing in standby status, CX-Programmer may go offline. If this occurs, reconnect the computer to the CPU Unit and turn OFF the Online Edit Disable Bit (A527.09).

Note When using automatic transfer from a Memory Cassette at startup, be sure to transfer the data to the Memory Cassette if any changes are made using online editing. If power is turned OFF before the changes are transferred, the data from before online editing was performed will be read from the Memory Cassette.

Related Auxiliary Bits/Words

Name	Address	Description
Online Edit Disable Bit Validator	A527.00 to A527.07	Enables using the Online Edit Disable Bit (A527.09). Not 5A: Online Edit Disable Bit disabled. 5A: Online Edit Disable Bit enabled.
Online Edit Disable Bit	A527.09	To disable online editing, set the Online Edit Disable Bit Validator (A527.00 to A527.07) to 5A and turn ON this bit ON.

Name	Address	Description
Online Editing Wait Flag	A201.10	ON while an online editing process is on standby because online editing is disabled.
Online Editing Processing Flag	A201.11	ON while an online editing process is being executed.

10-2-4 Tracing Data

The Data Trace function samples specified I/O memory data using any one of the following timing methods. It stores the sampled data in Trace Memory, where they can be read and checked later from the CX-Programmer.

- Specified sampling time (10 to 2,550 ms in 10-ms units)
- One sample per cycle
- When the TRACE MEMORY SAMPLING instruction (TRSM(045)) is executed

Up to 31 bits and 6 words in I/O memory can be specified for sampling.

Basic Procedure

1,2,3...

1. Sampling will start when the parameters have been set from the CX-Programmer and the command to start tracing has been executed.
2. Sampled data (after step 1 above) will be traced when the trace trigger condition is met, and the data just after the delay (see note 1) will be stored in Trace Memory.
3. Memory data will be sampled until the Trace Memory is full, and then the trace will be ended.

Note Delay value: Specifies how many sampling periods to offset the sampling in Trace Memory from when the trace condition is met. The setting ranges are shown in the following table.

No. of words sampled	Setting range
0	–1999 to 2000
1	–1332 to 1333
2	–999 to 1000
3	–799 to 800
4	–665 to 666
5	–570 to 571
6	–499 to 500

Positive delay: Store data delayed by the set delay.

Negative delay: Store previous data according go to the set delay.

Example: Sampling at 10 ms with a –30 ms delay time yields –30 x 10 = 300 ms, so data 300 ms before the trigger will be stored.

Note Use the CX-Programmer to turn ON the Sampling Start Bit (A508.15). Never turn ON this bit from the user program.

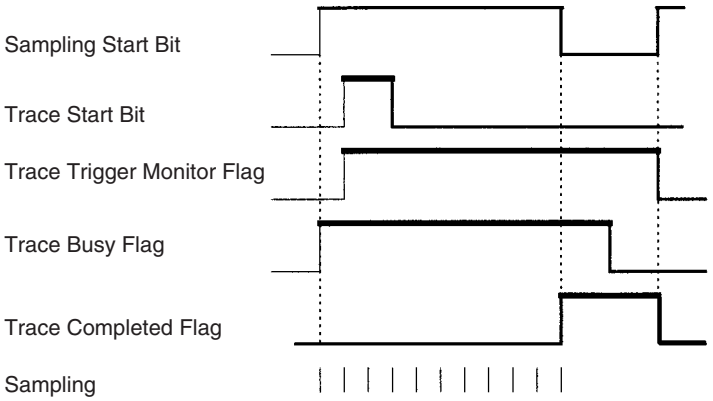

The following traces can be executed.

Scheduled Data Trace A scheduled data trace will sample data at fixed intervals. Specified sampling interval is 10 to 2,550 ms in 10-ms units. Do not use the TRSM(045) instruction in the user program and be sure to set the sampling period higher than 0.

One-cycle Data Trace A one-cycle data trace will sample I/O refresh data after the end of all cyclic tasks. Do not use the TRSM(045) instruction in the user program and be sure to set the sampling period higher than 0.

Data Trace via TRSM(045) A sample will be taken once each time the TRACE MEMORY SAMPLING instruction (TRSM(045)) instruction is executed. When more than one TRSM(045) instruction is used in the program, a sample will be taken each time TRSM(045) is executed after the trace trigger condition has been met until trace memory is full.

Data Trace Procedure

Use the following procedure to execute tracing.

1,2,3...

1. Use the CX-Programmer to set trace parameters (select ***PLC - Data Trace*** and then select ***Operation - Configure***):
   Addresses of the sampled words/bits, sampling period, delay time, and trigger conditions.
2. Use the CX-Programmer to start sampling or turn ON the Sampling Start Bit (A508.15).
3. Put the trace trigger condition into effect.
4. End tracing.
5. Use CX-Programmer to read the trace data.
   a) Select ***Data Trace*** from the PLC Menu.
   b) Select ***Select*** from the Operation Menu.
   c) Select ***Execute*** from the Operation Menu.
   d) Select ***Read*** from the Operation Menu.

Related Auxiliary Bits/Words

Name	Address	Description
Sampling Start Bit	A508.15	Use the CX-Programmer to turn ON this bit to start sampling. This bit must be turned ON from the CX-Programmer. Do not turn this bit ON and OFF from the user program. Note: The bit will be turned OFF when the Data Trace has been completed.
Trace Start Bit	A508.14	When this bit is turned ON, the trace trigger will be monitored and sampled data will be stored in Trace Memory when the trigger condition is met. The following traces are enabled with this bit. 1) Scheduled trace (trace at fixed intervals of 10 to 2,550 ms) 2) TRSM(045) instruction trace (trace when the TRSM(045) is executed) 3) One-cycle trace (trace at the end of execution of all cyclic tasks)
Trace Trigger Monitor Flag	A508.11	This flag turns ON when the trace trigger condition has been met after the Trace Start Bit has turned ON. This flag will turn OFF when the sampling is started.
Trace Busy Flag	A508.13	This flag turns ON when sampling is started and turns OFF when the trace has been completed.
Trace Completed Flag	A508.12	This flag turns ON when Trace Memory becomes full after the trace trigger condition has been met during a trace operation and turns OFF when the next sampling operation is started.

SECTION 11
Troubleshooting

This section provides information on hardware and software errors that occur during CP1L operation.

11-1 Error Classification and Confirmation 606
11-2 Troubleshooting 608
11-2-1 Error Processing Flowchart 608
11-2-2 No Operation When Power Is Supplied 608
11-2-3 Fatal Errors 609
11-2-4 CPU Errors 613
11-2-5 Non-fatal Errors 614
11-2-6 Other Errors 616
11-3 Error Log 617
11-4 Troubleshooting Unit Errors 618

11-1 Error Classification and Confirmation

Error Categories

Errors in CP1L CPU Units can be broadly divided into the following four categories.

Category	Comments
CPU Error	A WDT (watchdog timer) error is generated in the CPU Unit, the CPU Unit will malfunction, and operation will stop.
CPU Standby	The CPU will go on standby because conditions for stating operation have not yet been met.
Fatal Error	Operation cannot continue. Operation will stop due to a serious problem.
Non-fatal Error	A minor problem has occurred. Operation will continue

Confirming Errors

There are three sources of information on errors that have occurred.

- CPU Unit indicators
- Auxiliary Area

CPU Unit Indicators

These indicators show the operating status of the CPU Unit.

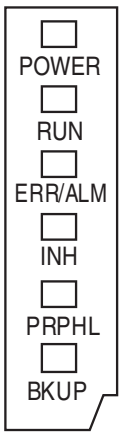

POWER (green)	Lit	Power is ON.
	Not lit	Power is OFF.
RUN (green)	Lit	The CPU Unit is executing a program in either RUN or MONITOR mode.
	Not lit	Operation is stopped in PROGRAM mode or due to a fatal error.
ERR/ALM (red)	Lit	A fatal error or CPU error (WDT error) has occurred. operation will stop and all outputs will be turned OFF.
	Flashing	A non-fatal error has occurred. Operation will continue.
	Not lit	Operation is normal.
INH (yellow)	Lit	The Output OFF Bit (A500.15) was turned ON. All outputs will be turned OFF.
	Not lit	Operation is normal.
PRPHL (yellow)	Flashing	Communications (either sending or receiving) are in progress through the peripheral port.
	Not lit	Other than the above.
BKUP (yellow) (See note.)	Lit	• The user program, parameters, or DM Area data is being written to or accessed in the built-in flash memory (backup memory). • The user program, parameters, DM Area data, or DM initial values are being written to or accessed in a Memory Cassette. • The BKUP indicator also lights while the user program is being restored when the power supply is turned ON.
	Not lit	Other than the above.

Note Do not turn OFF the CPU Unit power supply when this indicator is lit.

CPU Unit Indicators and Error Meanings in RUN or MONITOR Mode

Indicator	CPU error	CPU standby	Fatal error	Non-fatal error	Peripheral port communications error	Output OFF Bit turned ON
POWER	Lit	Lit	Lit	Lit	Lit	Lit
RUN	Not lit	Not lit	Not lit	Lit	Lit	Lit
ERR/ALM	Lit	Not lit	Lit	Flashing	---	---
INH	Not lit	---	---	---	---	Lit
PRPHL	---	---	---	---	Not lit	---
BKUP	---	---	---	---	---	---

Auxiliary Area

■ Error Code Storage Word

The error code is stored in A400 when an error occurs. If two or more errors occur at the same time, the most serious error will be stored.

■ Error Flags

Flags that indicate the type of error are allocated in the Auxiliary Area.

■ Error Information

This area indicates specific information on the meaning of error flags and provides information on error location and error details.

■ Fatal Errors

Error	Error code (A400)	Error flag	Error information	
			Meaning	Address
Memory error	80F1	A401.15	Memory error location	A403
I/O bus error	80C0 to 80C7, 80CA, 80CE, 80CF	A401.14	I/O bus error details	A404
Too many I/O error	80E1	A401.11	Details for too many I/O error	A407
Program error	80F0	A401.09	Program error details	A294 to A299
Cycle time too long error	809F	A401.08	---	---
FALS instruction executed	C101 to C2FF	A401.06	---	---

■ Non-fatal Errors

Error	Error code (A400)	Error flag	Error information	
			Meaning	Address
FAL instruction executed	4101 to 42FF	A402.15	Executed FAL number	A360 to A391
Flash memory error	00F1	A315.15	---	---
Interrupt task error	008B	A402.13	Interrupt task error unit number	A426
PLC Setup error	009B	A402.10		A406
Option Board error	00D1, 00D2	A315.13	Error Option Board Flags	A424
Battery error	00F7	A402.04	---	---

11-2 Troubleshooting

Use the following procedure to check error details and remove the cause of the error if the CPU Unit does not operate when the power supply is ON, operation suddenly stops and the error indicator (ERR/ALM indicator) lights, or if the error indicator (ERR/ALM indicator) flashes during operating.

11-2-1 Error Processing Flowchart

Confirm the error category by referring to the status of the CPU Unit indicators, investigate the cause for the error in the error tables, and take corrective actions.

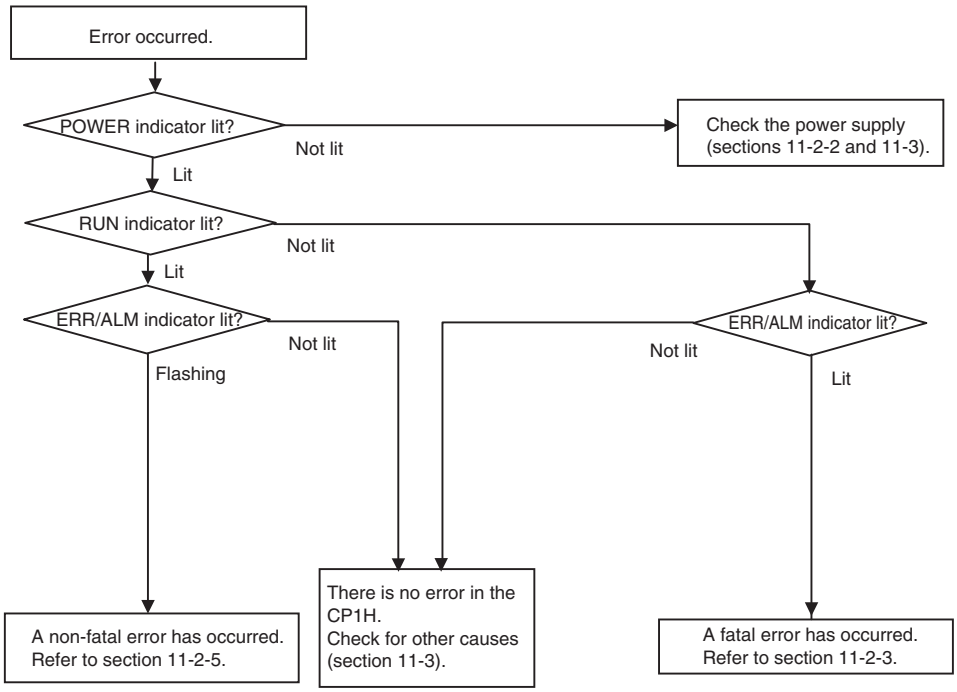

11-2-2 No Operation When Power Is Supplied

First confirm that the POWER indicator (green) is lit.

POWER Indicator Not Lit

The power supply may not match the Unit rating, wiring may not be correct, or the Unit may be faulty.

1,2,3...

1. Confirm the Unit rating (i.e., is it 24 VDC or 100 to 240 VAC?) and see if the supply power matches the rating.
2. Check the wiring to see if it is correct and that nothing is disconnected.
3. Check the voltage at the power supply terminals. If the voltage is normal and the POWER indicator is lit, the Unit may be faulty. In that case, replace the Unit.

POWER Indicator Turns OFF and ON

There may be fluctuations in the power supply voltage, disconnected wiring, or poor contacts. Check the power supply system and wiring.

POWER Indicator Lit but No Operation

Check the RUN indicator if the POWER indicator is lit but the CPU Unit does not operate. The CPU Unit may be on standby if the RUN indicator is not lit.

■ **CPU Standby**

Detection of Special I/O Units and CPU Bus Units has not been completed.

- If a CPU Bus Unit has not started normally, check the Unit Setup.
- If a Special I/O Unit is not detected, replace the Special I/O Unit.

11-2-3 Fatal Errors

■ **CPU Unit Indicators**

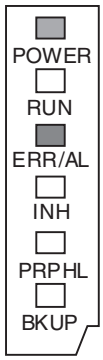

POWER	Lit
RUN	Not lit
ERR/ALM	Lit
INH	---
PRPHL	---
BKUP	---

There may be a CPU error or a fatal error if operation stops (i.e., the RUN indicator turns OFF) and the ERR/ALM indicator lights.

Data on fatal errors is displayed on the Error Tab Page of the CX-Programmer's PLC Error Window.

Take corrective actions after checking error details based on the CX-Programmer display message together with the Auxiliary Area Error Flags and error information.

Note

1. Errors are listed in order with the most serious errors first.
2. If two or more errors occur at the same time, the most serious error code will be stored in A400.
3. I/O memory will be cleared if a fatal error occurs (except those created with FALS instructions).
4. I/O memory will be held when the I/O Memory Hold Bit is ON, but outputs will be turned OFF.

Memory Errors

Probable cause		Possible remedy
Automatic transfer from the Memory Cassette at startup failed because the required data is not on the Memory Cassette.		Store the required data on the Memory Cassette.
An error has occurred in memory. One or more bits in A403 will turn ON to indicate where the error has occurred. See below for details. • Memory Error Location		See below.
A403.00 is ON	A checksum error has occurred in the user program. The power supply was turned OFF when backing up the user program to flash memory.	Transfer the user program again.
A403.04 is ON	A checksum error has occurred in the PLC Setup.	Transfer the PLC Setup again.
A403.07 is ON	A checksum error has occurred in the routing tables.	Transfer the routing tables again.
A403.09 is ON	The contents of a Memory Cassette could not be normally read to the CPU Unit when power was turned ON.	Check to see if the files required for automatic transfer at startup are present on the Memory Cassette.
A403.10 is ON	There is a problem with flash memory.	A hardware error has occurred in the CPU Unit. Replace the CPU Unit.

■ **Reference Information**

Error flag	Memory Error Flag, A401.15
Error code (A400)	80F1
Error information	Memory Error Location, A403

I/O Bus Errors

An I/O bus error occurs in data transfer between the CPU Units and Units connected to the I/O bus. Cycle the power supply. If operation is not restored when the power supply has been cycled, turn OFF the power supply and check that connections are proper and that there is no damage.

Probable cause	Possible remedy
An error occurred in data transfer between the CPU Unit and an Expansion Unit or Expansion I/O Unit. **Note** 0A0A hex will be stored in A404.	Try cycling the power supply. If the problem persists, turn OFF the power supply and check the Connecting Cables between the Units to see if they are connected properly. Check the Unit connections to be sure they are ok (e.g., that there is no damage). After correcting the problem, turn ON the power to the Units again.

■ **Reference Information**

Error flag	I/O Bus Error Flag, A401.14
Error code (A400)	80C0, 80CA, 80CE, 80CF
Error information	I/O bus error details, A404 (0A0A)

Too Many I/O Points

The number of CP1W/CPM1A-series Expansion Units and Expansion I/O Units connected exceeds the restriction for the number of Units or words for the system configuration. Turn OFF the power supply and reconfigure the system within the restrictions.

Probable cause	Possible remedy
The number of CP1W/CPM1A-series Expansion Units and Expansion I/O Units exceeds the restriction.	• Connect a maximum of three Expansion Units and Expansion I/O Units to the CP1L-M60D□-□, CP1L-M40D□-□ or CP1L-M30D□-□. • Connect a maximum of one Expansion Unit or Expansion I/O Unit to the CP1L-L20D□-□ or CP1L-L14D□-□.

■ **Reference Information**

Error flag	Too Many I/O Points Flag, A401.11
Error code (A400)	80E1
Error information	Too Many I/O Points Details, A407

Program Error

A program error indicates a problem with the user program. Refer to the error information, check the program, and correct the mistakes. Clear the error once the problem has been corrected.

Probable cause	Possible remedy
Instruction Processing Error If the PLC Setup has been set to stop operation for an instruction error, the Error Flag will be turned ON when an instruction cannot be executed due to a problem in the operand data.	Refer to A298 and A299 (instruction program address when the program fails), check the specifications for the relevant instruction, and set the correct operand data. Alternatively, set the PLC Setup to not stop operation for an instruction error.
Indirect DM Addressing BCD Error If the PLC Setup has been set to stop operation for an indirect DM BCD error, the Access Error Flag will turn ON when the content of an indirectly addressed DM operand is not BCD although BCD mode has been selected.	Refer to A298 and A299 (instruction program address when the program fails), and correctly set the content for the indirectly addressed DM operand (BCD mode) to BCD or change the specified destination. Alternatively, change the indirect addressing to binary mode or set the PLC Setup to not stop operation for an indirect DM addressing BCD error.

Probable cause	Possible remedy
Illegal Area Access Error If the PLC Setup has been set to stop operation for an illegal access error, the Access Error Flag will turn ON when an illegal access error has occurred. The following operations are considered illegal access: • Reading/writing the parameter area • Writing to an area without memory installed • Writing to a write-protected area • Indirect DM addressing BCD error	Refer to A298 and A299 (instruction program address when the program fails) and take corrective actions so that illegal area access errors will not occur. Alternatively, set the PLC Setup so that PLC operation will not stop when an instruction error occurs.
No END Error This error occurs when there is not an END(001) instruction in the program within a task.	Insert an END(001) instruction at the end of the program allocated to the task stored in A294 (task number when the program fails).
Task Error This error is generated by any of the following conditions. 1. There is not an executable cyclic task (active). 2. There is no specified interrupt task when an interrupt is generated (input interrupt, high-speed counter interrupt, scheduled interrupt, or external interrupt).	1. Check the properties of the executable cyclic task and set at least one task to start when operation starts. 2. Create a task for the number stored in A294 (task number when the program fails).
Differentiation Overflow Error Differentiation instructions were repeatedly inserted or deleted using the online editor and the system restriction was exceeded.	Change the operating mode to PROGRAM mode and then return to MONITOR mode.
Illegal Instruction Error Execution of an unexecutable instruction was attempted. For a CPU Unit with 10, 14 or 20 I/O Points, the instruction operand will be given in D10000 to D31999.	Check the program, correct the problem, and transfer the program to the CPU Unit again.
UM Overflow Error An attempt was made to execute a program that exceeds the user program capacity.	Transfer the program again using the CX-Programmer.

■ **Reference Information**

Error flag	Program Error Flag, A401.09
Error code (A400)	80F0
Error information	Program error details, A294 to A299

Cycle Time Too Long

Probable cause	Possible remedy
This error occurs when the cycle time PV exceeds the maximum cycle time set in the PLC Setup.	Review the program to decrease the cycle time or change the maximum cycle time set in the PLC Setup. Refer to the Maximum Interrupt Task Processing Time (A440) and study the maximum cycle time. The cycle time can be decreased using the following methods. • Separate instructions not being executed into different tasks. • Consider using jump instructions for areas in the task that are not executed. • Prohibit cycle refreshing with Special I/O Units that do not require exchange of cycle data.

■ **Reference Information**

Error flag	Cycle Time Too Long Error, A401.08
Error code (A400)	809F
Error information	---

Errors Created with FALS Instructions

Probable cause	Possible remedy
FALS instruction executed (FALS number 001)	C100 hex will be added to the FALS number (001 to 1FF hex) and the result will be stored in A400 as the error code (C100 to C2FF hex). Check the conditions for executing FALS instructions and remove any causes for the user-defined error.

■ **Reference Information**

Error flag	FALS Error Flag, A401.06
Error code (A400)	C101 to C2FF
Error information	---

11-2-4 CPU Errors

■ **CPU Unit Indicators**

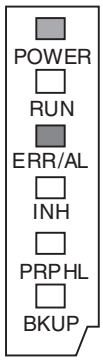

POWER	Lit
RUN	Not lit
ERR/ALM	Lit
INH	---
BKUP	---
PRPHL	---

A CPU error or fatal error may have occurred if the ERR/ALM indicator lights during operation (RUN mode or MONITOR mode), the RUN indicator turns OFF, and operation stops.

CPU Errors

Probable cause	Possible remedy
A WDT (watchdog) error occurred in the CPU Unit. (This does not occur in normal use.)	Cycle the power supply. The Unit may be faulty. Consult your OMRON representative.

■ **Reference Information**

Error flag	None
Error code (A400)	None
Error information	None

Note Just as when a CPU error occurs, the RUN indicator will turn OFF and the ERR/ALM indicator will light when a fatal error occurs. Connecting the CX-Programmer, however, is possible for fatal errors but not for CPU errors. If the CX-Programmer cannot be connected (online), a CPU error has probably occurred.

11-2-5 Non-fatal Errors

A non-fatal error has occurred if both the RUN indicator and the ERR/ALM indicator are lit during operation (i.e., in RUN or MONITOR mode).

■ **CPU Unit Indicators**

POWER	Lit
RUN	Lit
ERR/ALM	Flashing
INH	---
BKUP	---
PRPHL	---

Information on the non-fatal error can be obtained from the Error Tab Page of the CX-Programmer's PLC Error Window. Take corrective actions after checking error details using the display messages and the Auxiliary Area Error Flags and error information.

- Errors are listed in the following table in order, with the most serious ones first.
- If two or more errors occur at the same time, the most serious error code will be stored in A400.

Errors Created with for FAL Instructions

A FAL instruction was executed in the program to create a non-fatal error.

Probable cause	Possible remedy
The executed FAL number 001 to 511 will be stored in A360 to A391. The number 4 will be added to the front of 101 to 2FF (which correspond to executed FAL numbers 001 to 511) and the result will be stored in A400 as error code 4101 to 42FF.	Check the conditions for executing FAL instructions and remove any causes of the user-defined error.

■ **Reference Information**

Error flag	FAL Error Flag, A402.15
Error code (A400)	4101 to 42FF
Error information	None

Flash Memory Errors

Probable cause	Possible remedy
A315.15 will turn ON when writing to the internal flash memory fails.	Replace the CPU Unit when the internal flash memory has been written to more than 100,000 times.

■ **Reference Information**

Error flag	Flash Memory Error Flag, A315.15 Other non-fatal flags, A402.00
Error code (A400)	None
Error information	None

Interrupt Task Errors

Probable cause	Possible remedy
An interrupt task error occurs when the *Detect Interrupt task errors setting* in the PLC Setup is set to *Detect* and an attempt is made to refresh a Special I/O Unit from an interrupt task with IORF(097) while the Unit's I/O is being refreshed by cyclic refreshing (duplicate refreshing).	Review the program to see whether detecting interrupt task errors can be disabled or avoided.

■ **Reference Information**

Error flag	Interrupt Task Error Flag, A402.13
Error code (A400)	008B
Error information	Interrupt Task Error, A426

PLC Setup Errors

Probable cause	Possible remedy
A set value error occurred in the PLC Setup. The address of the error is stored in A406 in 16-bit binary.	Correct the PLC Setup with correct values.

■ **Reference Information**

Error flag	PLC Setup Error Flag, A402.10
Error code (A400)	009B
Error information	PLC Setup error location, A406

Option Board Errors

Probable cause	Possible remedy
A315.13 will turn ON if the Option Board is removed while the power is being supplied.	Turn OFF the power supply and then install the Option Board again.

■ **Reference Information**

Error flags	Option Board Error Flag, A315.13 Other Non-fatal Error Flag, A402.00
Error code (A400)	---
Error information	---

Battery Error

Probable cause	Possible remedy
If the PLC Setup is set to detect battery errors, this error will occur when there is an error in the battery in the CPU Unit (i.e., the voltage is low or a battery is not mounted).	Check the battery connections. When using battery-free operation, disable connecting battery errors in the PLC Setup.

■ **Reference Information**

Error flag	Battery Error Flag, A402.04
Error code (A400)	00F7
Error information	---

11-2-6 Other Errors

Communications Errors

■ **CPU Unit Indicators**

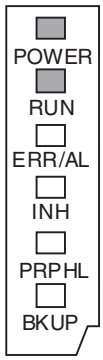

POWER	Lit
RUN	Lit
ERR/ALM	---
INH	---
PRPHL	---
BKUP	Not lit

Probable cause	Possible remedy
An error has occurred in the communications between the peripheral port and connected device.	Confirm that the peripheral port settings in the PLC Setup are correct. Check the USB cable and replace it if necessary.
An error has occurred in the communications between the serial port and connected device.	Confirm that the serial port 1/2 settings in the PLC Setup are correct. Check the cable wiring. If a host computer is connected, check the serial port settings and program in the host computer.

11-3 Error Log

Each time an error occurs, the CPU Unit stores error information in the Error Log Area of the Auxiliary Area (A100 to A199). The error information includes the error code (stored in A400), error contents, and time that the error occurred. Up to 20 records can be stored in the Error Log.

In addition to system-generated errors, the CPU Unit records user-defined errors, making it easier to track the operating status of the system.

When more than 20 errors occur, the oldest error data (stored in A100 to A104) is deleted, the 19 errors stored in A105 to A199 shift one record, and the newest record is stored in A195 to A199.

The number of records stored in the error log is stored in the Error Log Pointer (A300). The Error Log Pointer is not incremented after 20 records have been stored.

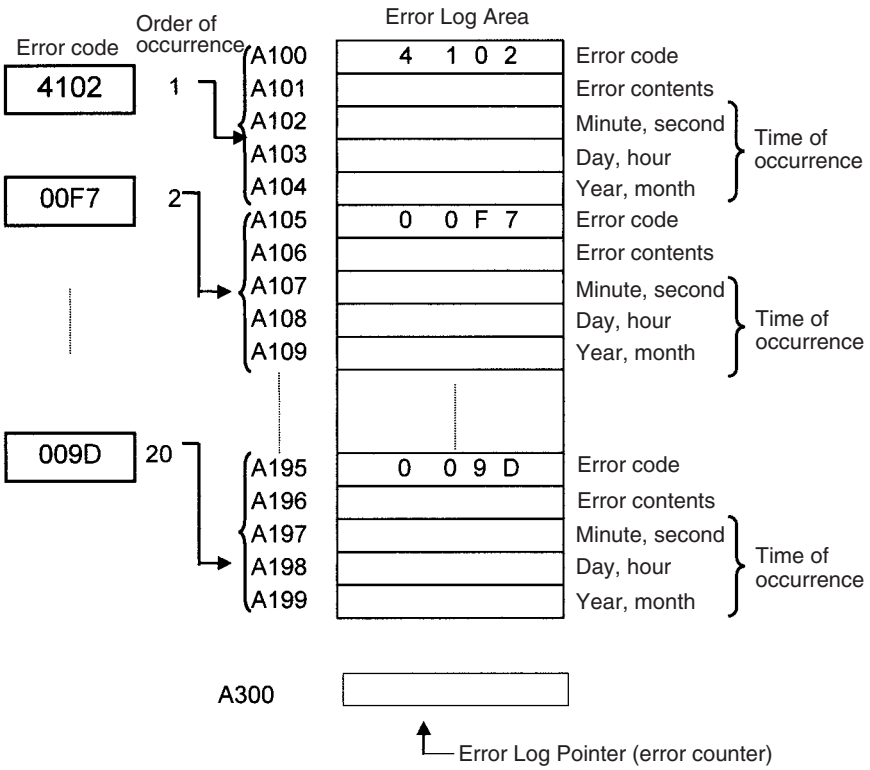

11-4 Troubleshooting Unit Errors

CPU Unit

Symptom	Cause	Remedy
POWER indicator is not lit.	PCB short-circuited or damaged.	Replace Unit.
RUN indicator is not lit.	(1) Error in program (fatal error)	Correct program.
	(2) Power line is faulty.	Replace Unit.
RUN indicator on the CPU Unit is lit.	Internal circuitry in the Unit is faulty.	
Bits do not operate past a certain point.		
Error occurs in units of 8 or 16 points.		
I/O bit turns ON.		
All bits in one Unit do not turn ON.		

Inputs

Symptom	Cause	Remedy
Not all inputs turn ON or indicators are not lit.	(1) External power is not supplied for the input.	Supply power
	(2) Supply voltage is low.	Adjust supply voltage to within rated range.
	(3) Terminal block mounting screws are loose.	Tighten screws.
	(4) Faulty contact of terminal block connector.	Replace terminal block connector.
Not all inputs turn ON even though the indicator is lit.	Input circuit is faulty. (There is a short at the load or something else that caused an overcurrent to flow.)	Replace Unit.
Not all inputs turn OFF.	Input circuit is faulty.	Replace Unit.
Specific bit does not turn ON.	(1) Input device is faulty.	Replace input devices.
	(2) Input wiring disconnected.	Check input wiring
	(3) Terminal block screws are loose.	Tighten screws
	(4) Faulty terminal block connector contact.	Replace terminal block connector.
	(5) Too short ON time of external input.	Adjust input device
	(6) Faulty input circuit	Replace Unit.
	(7) Input bit number is used for output instruction.	Correct program.
Specific bit does not turn OFF.	(1) Input circuit is faulty.	Replace Unit.
	(2) Input bit number is used for output instruction.	Correct program.
Input irregularly turns ON/OFF.	(1) External input voltage is low or unstable.	Adjust external input voltage to within rated range.
	(2) Malfunction due to noise.	Take protective measures against noise, such as: • Install surge suppressor. • Install insulation transformer. Install shielded cables between the Input Unit and the loads.
	(3) Terminal block screws are loose.	Tighten screws
	(4) Faulty terminal block connector contact.	Replace terminal block connector.
Error occurs in units of 8 points or 16 points, i.e., for the same common.	(1) Common terminal screws are loose.	Tighten screws
	(2) Faulty terminal block connector contact.	Replace terminal block connector.
	(3) Faulty data bus	Replace Unit.
	(4) Faulty CPU	Replace CPU Unit.
Input indicator is not lit in normal operation.	Faulty indicator or indicator circuit.	Replace Unit.

Outputs

Symptom	Cause	Remedy
Not all outputs turn ON	(1) Load is not supplied with power.	Supply power
	(2) Load voltage is low.	Adjust voltage to within rated range.
	(3) Terminal block screws are loose.	Tighten screws
	(4) Faulty terminal block connector contact.	Replace terminal block connector.
	(5) An overcurrent (possibly caused by a short at the load) resulted in a blown fuse for the output or the Unit is faulty.	Replace fuse or Unit.
	(6) Faulty I/O bus connector contact.	Replace Unit.
	(7) Output circuit is faulty.	Replace Unit.
	(8) If the INH indicator is lit, the Output OFF Bit (A500.15) is ON.	Turn A500.15 OFF.
Not all outputs turn OFF	Output circuit is faulty.	Replace Unit.
Output of a specific bit number does not turn ON or indicator is not lit	(1) Output ON time too short because of a mistake in programming.	Correct program to increase the time that the output is ON.
	(2) Bit status controlled by multiple instructions.	Correct program so that each output bit is controlled by only one instruction.
	(3) Faulty output circuit.	Replace Unit.
Output of a specific bit number does not turn ON (indicator lit).	(1) Faulty output device.	Replace output device.
	(2) Break in output wiring.	Check output wiring.
	(3) Loose terminal block screws.	Tighten screws.
	(4) Faulty terminal block connector faulty.	Replace terminal block connector.
	(5) Faulty output bit (relay output only).	Replace Unit.
	(6) Faulty output circuit (relay output only).	Replace Unit.
Output of a specific bit number does not turn OFF (indicator is not lit).	(1) Faulty output bit.	Replace Unit.
	(2) Bit does not turn OFF due to leakage current or residual voltage.	Replace external load or add dummy resistor.
Output of a specific bit number does not turn OFF (indicator lit).	(1) Bit status controlled by multiple instructions.	Correct program.
	(2) Faulty output circuit.	Replace Unit.
Output irregularly turns ON/OFF.	(1) Low or unstable load voltage.	Adjust load voltage to within rated range
	(2) Bit status controlled by multiple instructions.	Correct program so that each output bit is controlled by only one instruction.
	(3) Malfunction due to noise.	Protective measures against noise: • Install surge suppressor. • Install insulation transformer. • Use shielded cables between the output terminal and the load.
	(4) Terminal block screws are loose.	Tighten screws.
	(5) Faulty terminal block connector contact.	Replace terminal block connector.
Error occurs in units of 8 points or 16 points, i.e., for the same common.	(1) Loose common terminal screw.	Tighten screws.
	(2) Faulty terminal block connector contact.	Replace terminal block connector.
	(3) An overcurrent (possibly caused by a short at the load) resulted in a blown fuse for the output or the Unit is faulty.	Replace fuse or Unit.
	(4) Faulty data bus.	Replace Unit.
	(5) Faulty CPU.	Replace CPU Unit.
Output indicator is not lit (operation is normal).	Faulty indicator.	Replace Unit.

SECTION 12
Inspection and Maintenance

This section provides inspection and maintenance information.

12-1 Inspections 622
12-1-1 Inspection Points. 622
12-1-2 Unit Replacement Precautions 623
12-2 Replacing User-serviceable Parts 624

12-1 Inspections

Daily or periodic inspections are required in order to maintain the PLC's functions in peak operating condition.

12-1-1 Inspection Points

Although the major components in CP-series PLCs have an extremely long life time, they can deteriorate under improper environmental conditions. Periodic inspections are thus required to ensure that the required conditions are being kept.

Inspection is recommended at least once every six months to a year, but more frequent inspections will be necessary in adverse environments.

Take immediate steps to correct the situation if any of the conditions in the following table are not met.

No.	Item	Inspection	Criteria	Action
1	Source Power Supply	Check for voltage fluctuations at the power supply terminals.	The voltage must be within the allowable voltage fluctuation range. (See note.)	Use a voltage tester to check the power supply at the terminals. Take necessary steps to bring voltage fluctuations within limits.
2	I/O Power Supply	Check for voltage fluctuations at the I/O terminals.	Voltages must be within specifications for each Unit.	Use a voltage tester to check the power supply at the terminals. Take necessary steps to bring voltage fluctuations within limits.
3	Ambient environment	Check the ambient temperature (inside the control panel if the PLC is in a control panel).	0 to 55°C	Use a thermometer to check the temperature and ensure that the ambient temperature remains within the allowed range of 0 to 55°C.
		Check the ambient humidity (inside the control panel if the PLC is in a control panel).	Relative humidity must be 10% to 90% with no condensation.	Use a hygrometer to check the humidity and ensure that the ambient humidity remains within the allowed range.
		Check that the PLC is not in direct sunlight.	Not in direct sunlight	Protect the PLC if necessary.
		Check for accumulation of dirt, dust, salt, metal filings, etc.	No accumulation	Clean and protect the PLC if necessary.
		Check for water, oil, or chemical sprays hitting the PLC.	No spray on the PLC	Clean and protect the PLC if necessary.
		Check for corrosive or flammable gases in the area of the PLC.	No corrosive or flammable gases	Check by smell or use a sensor.
		Check the level of vibration or shock.	Vibration and shock must be within specifications.	Install cushioning or shock absorbing equipment if necessary.
		Check for noise sources near the PLC.	No significant noise sources	Either separate the PLC and noise source or protect the PLC.

No.	Item	Inspection	Criteria	Action
4	Installation and wiring	Check that each Unit is connected securely and locked in place.	No looseness	Press the connectors together completely and lock them with the sliders.
		Check that the Option Boards and cable connectors are fully inserted and locked.	No looseness	Correct any improperly installed connectors.
		Check for loose screws in external wiring.	No looseness	Tighten loose screws with a Phillips screwdriver.
		Check crimp connectors in external wiring.	Adequate spacing between connectors	Check visually and adjust if necessary.
		Check for damaged external wiring cables.	No damage	Check visually and replace cables if necessary.
5	User-serviceable parts	Check whether the battery has reached its service life. CJ1W-BAT01 Battery	Service life expectancy is 5 years at 25°C, less at higher temperatures. (From 0.75 to 5 years depending on model, power supply rate, and ambient temperature.)	Replace the battery when its service life has passed even if a battery error has not occurred.

Note The following table shows the allowable voltage fluctuation ranges for source power supplies.

CPU Unit	Supply voltage	Allowable voltage range
CP1L-M□□D□-A CP1L-L□□D□-A	100 to 240 V AC	85 to 264 V AC (+10%/–15%)
CP1L-M□□D□-D CP1L-L□□D□-D	24 V DC	20.4 to 26.4 V DC (+10%/–15%)

Tools Required for Inspections

Required Tools

- Phillips screwdrivers
- Voltage tester or digital voltmeter
- Industrial alcohol and clean cotton cloth

Tools Required Occasionally

- Synchroscope
- Oscilloscope with pen plotter
- Thermometer and hygrometer

12-1-2 Unit Replacement Precautions

Check the following when replacing any faulty Unit.

- Do not replace a Unit until the power is turned OFF.
- Check the new Unit to make sure that there are no errors.
- If a faulty Unit is being returned for repair, describe the problem in as much detail as possible, enclose this description with the Unit, and return the Unit to your OMRON representative.
- For poor contact, take a clean cotton cloth, soak the cloth in industrial alcohol, and carefully wipe the contacts clean. Be sure to remove any lint prior to remounting the Unit.

Note When replacing a CPU Unit, be sure that not only the user program but also all other data required for operation is transferred to or set in the new CPU Unit before starting operation, including DM Area and HR Area settings. If

data area and other data are not correct for the user program, unexpected accidents may occur.

12-2 Replacing User-serviceable Parts

The following parts should be replaced periodically as preventative maintenance. The procedures for replacing these parts are described later in this section.

- Battery (backup for the CPU Unit's internal clock and RAM)

Battery Functions

The battery maintains the internal clock and the following data of the CPU Unit's RAM while the main power supply is OFF.

- Retained regions of I/O memory (such as the Holding Area and DM Area)

If the battery is not installed or battery voltage drops too low, the internal clock will stop and the data in RAM will be lost when the main power supply goes OFF.

Battery Service Life and Replacement Period

At 25°C, the maximum service life for batteries is five years whether or not power is supplied to the CPU Unit while the battery is installed. The battery's lifetime will be shorter when it is used at higher temperatures.

The following table shows the approximate minimum lifetimes and typical lifetimes for the backup battery (total time with power not supplied).

Model	Approx. maximum lifetime	Approx. minimum lifetime (See note.)	Typical lifetime (See note.)
CP1L-M□□D□-D CP1L-L□□D□-D	5 years	13,000 hours (approx. 1.5 years)	43,000 hours (approx. 5 years)

Note The minimum lifetime is the memory backup time at an ambient temperature of 55°C. The typical lifetime is the memory backup time at an ambient temperature of 25°C.

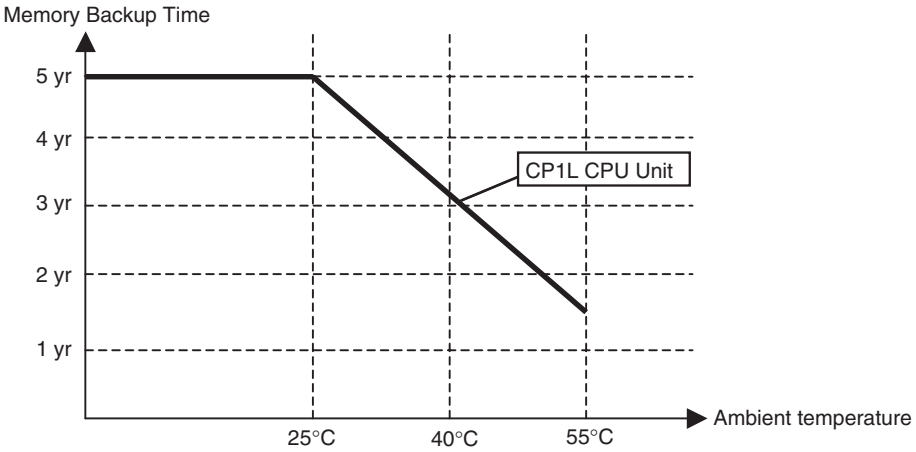

This graphic is for reference only.

Low Battery Indications

The ERR/ALM indicator on the front of the CPU Unit will flash when the battery is nearly discharged.

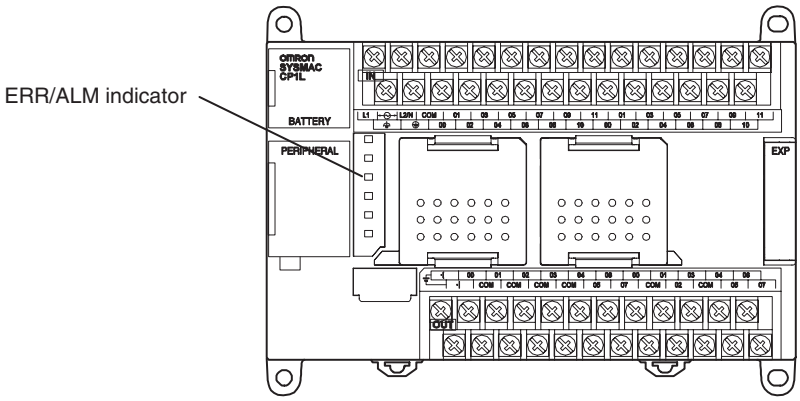

When the ERR/ALM indicator flashes, connect the CX-Programmer to the peripheral port and read the error messages. If a low battery message appears on the CX-Programmer (see note 1) and the Battery Error Flag (A402.04) is ON (see note 1), first check whether the battery is properly connected to the CPU Unit. If the battery is properly connected, replace the battery as soon as possible.

Once a low-battery error has been detected, it will take 5 days before the battery fails assuming that power has been supplied at lease once a day (see note 2). Battery failure and the resulting loss of data in RAM can be delayed by ensuring that the CPU Unit power is not turned OFF until the battery has been replaced.

Note

1. The PLC Setup must be set to detect a low-battery error (Detect Low Battery). If this setting has not been made, the BATT LOW error message will not appear on the CX-Programmer and the Battery Error Flag (A402.04) will not go ON when the battery fails.
2. The battery will discharge faster at higher temperatures, e.g., 4 days at 40°C and 2 days at 55°C.

Replacement Battery

Use the CJ1W-BAT01 Battery Set. Be sure to install a replacement battery within two years of the production date shown on the battery's label.

Production Date

OMRON
CJ1W-BAT01
05-07

Manufactured in July 2005.

Replacement Procedure

Use the following procedure to replace the battery when the previous battery has become completely discharged. You must complete this procedure within five minutes after turning OFF the power to the CPU Unit to ensure memory backup.

Note

1. We recommend replacing the battery with the power OFF to prevent the CPU Unit's sensitive internal components from being damaged by static electricity. The battery can be replaced without turning OFF the power supply. To do so, always touch a grounded piece of metal to discharge static electricity from your body before starting the procedure.
2. After replacing the battery, connect the CX-Programmer and clear the battery error.

Procedure

1,2,3... 1. Turn OFF the power to the CPU Unit.

or If the CPU Unit has not been ON, turn it ON for at least five minutes and then turn it OFF.

Note If power is not turned ON for at least five minutes before replacing the battery, the capacitor that backs up memory when the battery is removed will not be fully charged and memory may be lost before the new battery is inserted.

2. Open the compartment on the CPU Unit and carefully draw out the battery.
3. Remove the battery connector.
4. Connect the new battery, place it into the compartment, and close the cover.

CPU Units with 10, 14 or 20 I/O Points

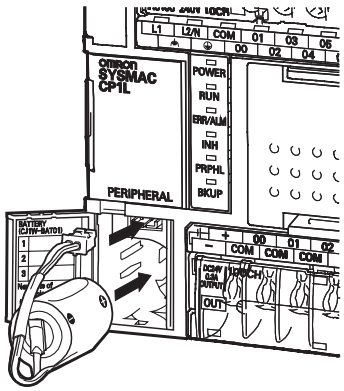

CPU Units with 30, 40 or 60 I/O Points

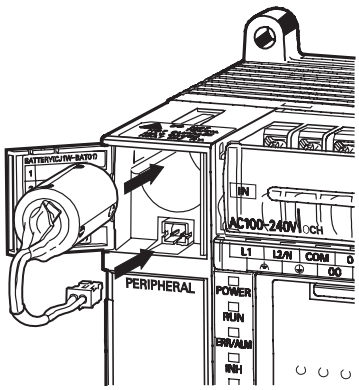

⚠WARNING Never short-circuit the battery terminals; never charge the battery; never disassemble the battery; and never heat or incinerate the battery. Doing any of these may cause the battery to leak, burn, or rupturing resulting in injury, fire, and possible loss of life or property. Also, never use a battery that has been dropped on the floor or otherwise subject to shock. It may leak.

⚠Caution You must complete this procedure within five minutes after turning OFF the power to the CPU Unit to ensure memory backup. If the procedure is not completed within 5 minutes, data may be lost.

⚠Caution UL standards require that batteries be replaced by experienced technicians. Always place an experienced technician in charge or battery replacement.

⚠ **Caution** Turn ON the power after replacing the battery for a CPU Unit that has been unused for a long time. Leaving the CPU Unit unused again without turning ON the power even once after the battery is replaced may result in a shorter battery life.

Note The battery error will automatically be cleared when a new battery is inserted.

Appendix A
Standard Models

CPU Units

Name and appearance	Model	Specifications			Remarks
		Power supply	Outputs	Inputs	
CPU Units with 10 I/O Points 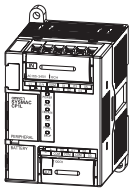	CP1L-L10DR-A	100 to 240 VAC	4 relay outputs	24 VDC 6 inputs	Memory capacity: 5 Ksteps High-speed counters: 100 kHz, 4 counters Pulse outputs: 2 axes at 100 kHz
	CP1L-L10DR-D	24 VDC	4 relay outputs		
	CP1L-L10DT-A	100 to 240 VAC	4 transistor outputs, sinking		
	CP1L-L10DT-D	24 VDC	4 transistor outputs, sinking		
	CP1L-L10DT1-D		4 transistor outputs, sourcing		
CPU Units with 14 I/O Points 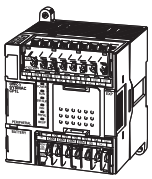	CP1L-L14DR-A	100 to 240 VAC	6 relay outputs	24 VDC 8 inputs	
	CP1L-L14DR-D	24 VDC	6 relay outputs		
	CP1L-L14DT-A	100 to 240 VAC	6 transistor outputs, sinking		
	CP1L-L14DT-D	24 VDC	6 transistor outputs, sinking		
	CP1L-L14DT1-D		6 transistor outputs, sourcing		
CPU Units with 20 I/O Points 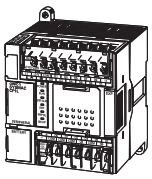	CP1L-L20DR-A	100 to 240 VAC	8 relay outputs	24 VDC 12 inputs	
	CP1L-L20DR-D	24 VDC	8 relay outputs		
	CP1L-L20DT-A	100 to 240 VAC	8 transistor outputs, sinking		
	CP1L-L20DT-D	24 VDC	8 transistor outputs, sinking		
	CP1L-L20DT1-D		8 transistor outputs, sourcing		

Name and appearance	Model	Specifications			Remarks
		Power supply	Outputs	Inputs	
CPU Units with 30 I/O Points 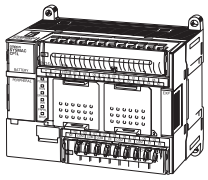	CP1L-M30DR-A	100 to 240 VAC	12 relay outputs	24 VDC 18 inputs	Memory capacity: 10 Ksteps High-speed counters: 100 kHz, 4 counters Pulse outputs: 2 axes at 100 kHz
	CP1L-M30DR-D	24 VDC	12 relay outputs		
	CP1L-M30DT-A	100 to 240 VAC	12 transistor outputs, sinking		
	CP1L-M30DT-D	24 VDC	12 transistor outputs, sinking		
	CP1L-M30DT1-D		12 transistor outputs, sourcing		
CPU Units with 40 I/O Points 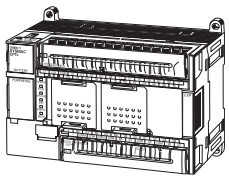	CP1L-M40DR-A	100 to 240 VAC	16 relay outputs	24 VDC 24 inputs	
	CP1L-M40DR-D	24 VDC	16 relay outputs		
	CP1L-M40DT-A	100 to 240 VAC	16 transistor outputs, sinking		
	CP1L-M40DT-D	24 VDC	16 transistor outputs, sinking		
	CP1L-M40DT1-D		16 transistor outputs, sourcing		
CPU Units with 60 I/O Points 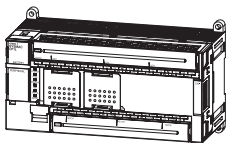	CP1L-M60DR-A	100 to 240 VAC	24 relay outputs	24 VDC 36 inputs	
	CP1L-M60DR-D	24 VDC	24 relay outputs		
	CP1L-M60DT-A	100 to 240 VAC	24 transistor outputs, sinking		
	CP1L-M60DT-D	24 VDC	24 transistor outputs, sinking		
	CP1L-M60DT1-D		24 transistor outputs, sourcing		

Programming Devices

Name and appearance	Model	Application	Remarks
CX-Programmer Ver. 7.1	WS02-CXPC1-E-V71	Programming and monitoring from a Windows environment	• The CP1L with 14, 20, 30, 40 or 60 points is supported by CX-Programmer version 7.1 or higher. • The CP1L with 10 points is supported by CX-Programmer version 7.3 or higher. • Use an off-the-shelf USB cable to connect the computer running the CX-Programmer to the USB port on the CP1L CPU Unit.

Optional Products

Name and appearance	Model	Application	Remarks
RS-232C Option Board	CP1W-CIF01	Mounted in option slot 1 or 2 on the CPU Unit to function as an RS-232C port.	---
RS-422A/485 Option Board 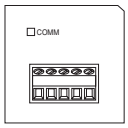	CP1W-CIF11/ CIF12	Mounted in option slot 1 or 2 on the CPU Unit to function as an RS-422A/485 port.	
LCD Option Board 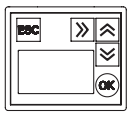	CP1W-DAM01	Used to monitor and change user-specified messages, time or other data of the CPU Unit.	---
Ethernet Option Board 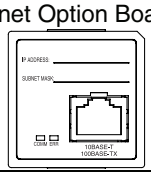	CP1W-CIF41	Can be used to communicate with these units supported OMRON FINS/TCP, FINS/ UDP protocol.	---
Memory Cassette	CP1W-ME05M	Used to save CPU Unit user programming, parameters, and data or to copy these to another CPU Unit.	---

Expansion I/O Units

Name and appearance	Model	Specifications		Remarks
		Inputs	Outputs	
40-point I/O Units 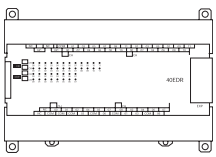	CP1W-40EDR CPM1A-40EDR	24 VDC 24 inputs	16 relay outputs	---
	CP1W-40EDT CPM1A-40EDT		16 transistor outputs, sinking	
	CP1W-40EDT1 CPM1A-40EDT1		16 transistor outputs, sourcing	
32-point Output Units 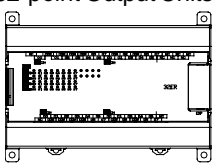	CP1W-32ER	None	32 relay outputs	---
	CP1W-32ET		32 transistor outputs, sinking	
	CP1W-32ET1		32 transistor outputs, sourcing	
20-point I/O Units 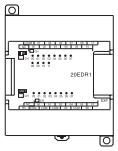	CP1W-20EDR1 CPM1A-20EDR1	24 VDC 12 inputs	8 relay outputs	---
	CP1W-20EDT CPM1A-20EDT		8 transistor outputs, sinking	
	CP1W-20EDT1 CPM1A-20EDT1		8 transistor outputs, sourcing	

Name and appearance	Model	Specifications		Remarks
		Inputs	Outputs	
16-point Output Units 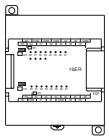	CP1W-16ER CPM1A-16ER	None	16 relay outputs	---
	CP1W-16ET		16 transistor outputs, sinking	
	CP1W-16ET1		16 transistor outputs, sourcing	
8-point Input Units 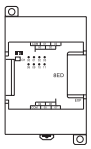	CP1W-8ED CPM1A-8ED	24 VDC 8 inputs	None	---
8-point Output Units 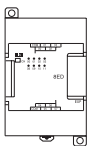	CP1W-8ER CPM1A-8ER	None	8 relay outputs	---
	CP1W-8ET CPM1A-8ET		8 transistor outputs, sinking	
	CP1W-8ET1 CPM1A-8ET1		8 transistor outputs, sourcing	

Expansion Units

Name and appearance	Model	Specifications	Remarks
Analog I/O Unit 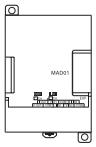	CPM1A-MAD01	2 analog inputs 0 to 10 V, 1 to 5 V, 4 to 20 mA 1 analog output 0 to 10 V, −10 to +10 V, 4 to 20 mA Resolution: 1/256	---
Analog I/O Unit 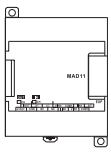	CP1W-MAD11 CPM1A-MAD11	2 analog inputs 0 to 5 V, 1 to 5 V, 0 to 10 V, −10 to +10 V, 0 to 20 mA, 4 to 20 mA 1 analog output 1 to 5 V, 0 to 10 V, −10 to +10 V, 0 to 20 mA, 4 to 20 mA Resolution: 1/6,000	---
Analog Input Unit 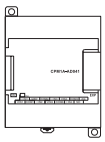	CP1W-AD041 CPM1A-AD041	4 analog inputs 0 to 5 V, 1 to 5 V, 0 to 10 V, −10 to +10 V, 0 to 20 mA, 4 to 20 mA Resolution: 1/6,000	---
Analog Output Unit 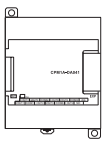	CP1W-DA021	2 analog outputs 1 to 5 V, 0 to 10 V, −10 to +10 V, 0 to 20 mA, 4 to 20 mA Resolution: 1/6,000	---
	CP1W-DA041 CPM1A-DA041	4 analog outputs 1 to 5 V, 0 to 10 V, −10 to +10 V, 0 to 20 mA, 4 to 20 mA Resolution: 1/6,000	---

Name and appearance	Model	Specifications	Remarks
Temperature Sensor Units 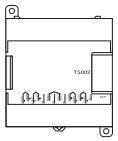	CP1W-TS001 CPM1A-TS001	Thermocouple inputs K or J, 2 inputs	---
	CP1W-TS002 CPM1A-TS002	Thermocouple inputs K or J, 4 inputs	---
	CP1W-TS101 CPM1A-TS101	Platinum resistance thermometer inputs Pt100 or JPt100, 2 inputs	---
	CP1W-TS102 CPM1A-TS102	Platinum resistance thermometer inputs Pt100 or JPt100, 4 inputs	---
DeviceNet I/O Link Unit 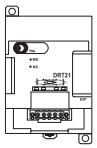	CPM1A-DRT21	As a DeviceNet Slave, 32 inputs and 32 outputs are allocated.	
CompoBus/S I/O Link Unit	CP1W-SRT21 CPM1A-SRT21	As a CompoBus/S slave, 8 inputs and 8 outputs are allocated.	

Maintenance Products

Name and appearance	Model	Specifications	Remarks
Battery 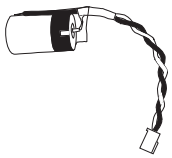	CJ1W-BAT01	---	Installed in the CPU Unit.

Installation and Wiring Products

Name and appearance	Model	Specifications	Remarks
DIN Track 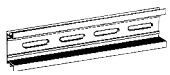	PFP-50N	---	---
	PFP-100N	---	
	PFP-100N2	---	
End Plate	PFP-M	---	
I/O Connecting Cable 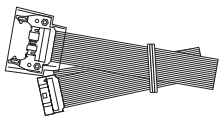	CP1W-CN811	Used to install CP-series/CPM1A-series Expansion Units and Expansion I/O Units in a second row. Only one I/O Connecting Cable can be used in each PLC.	---

Appendix B

Dimensions Diagrams

CP1L CPU Units

CPU Units with 10 I/O Points

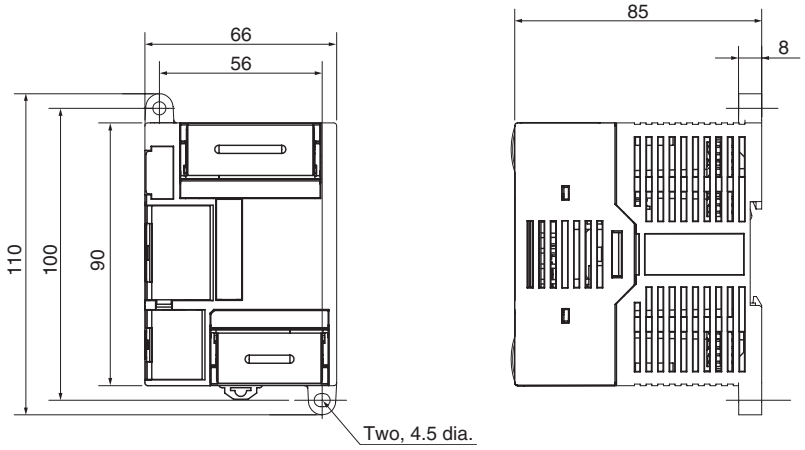

CPU Units with 14 or 20 I/O Points

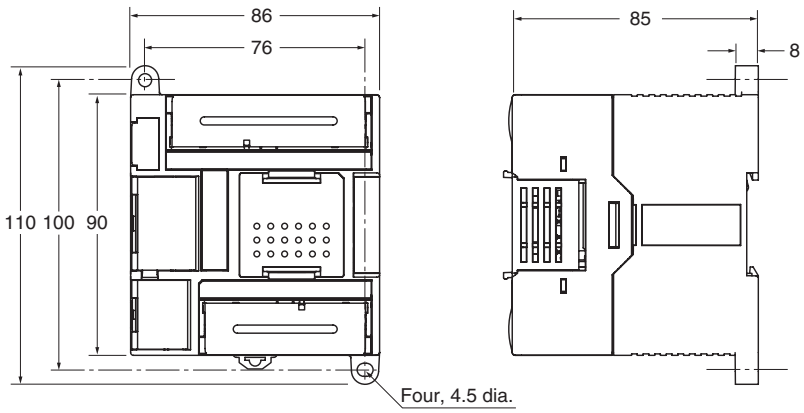

CPU Units with 30 I/O Points

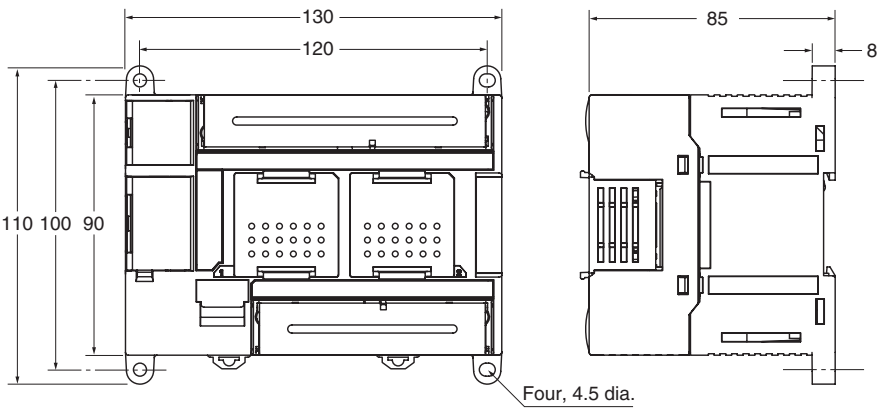

CPU Units with 40 I/O Points

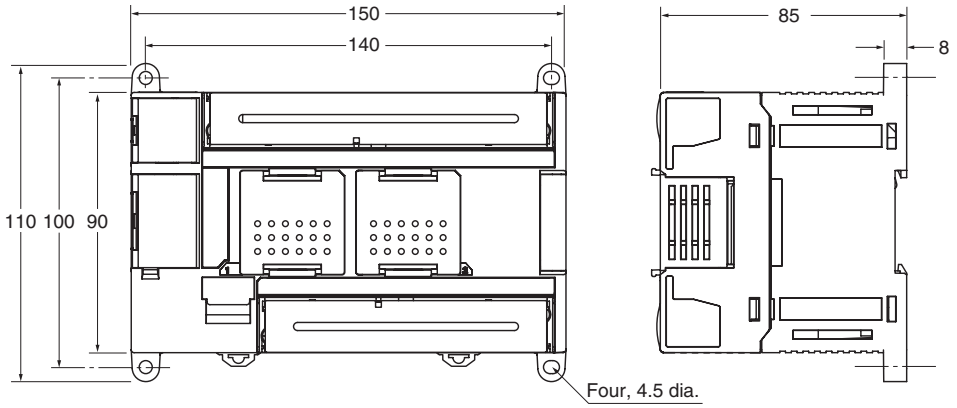

CPU Units with 60 I/O Points

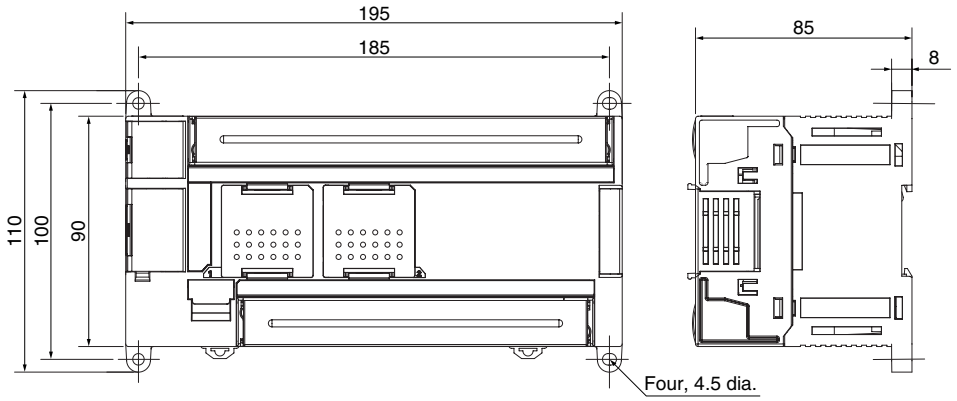

Optional Products

CP1W-CIF01/CIF11/CIF12 Option Boards

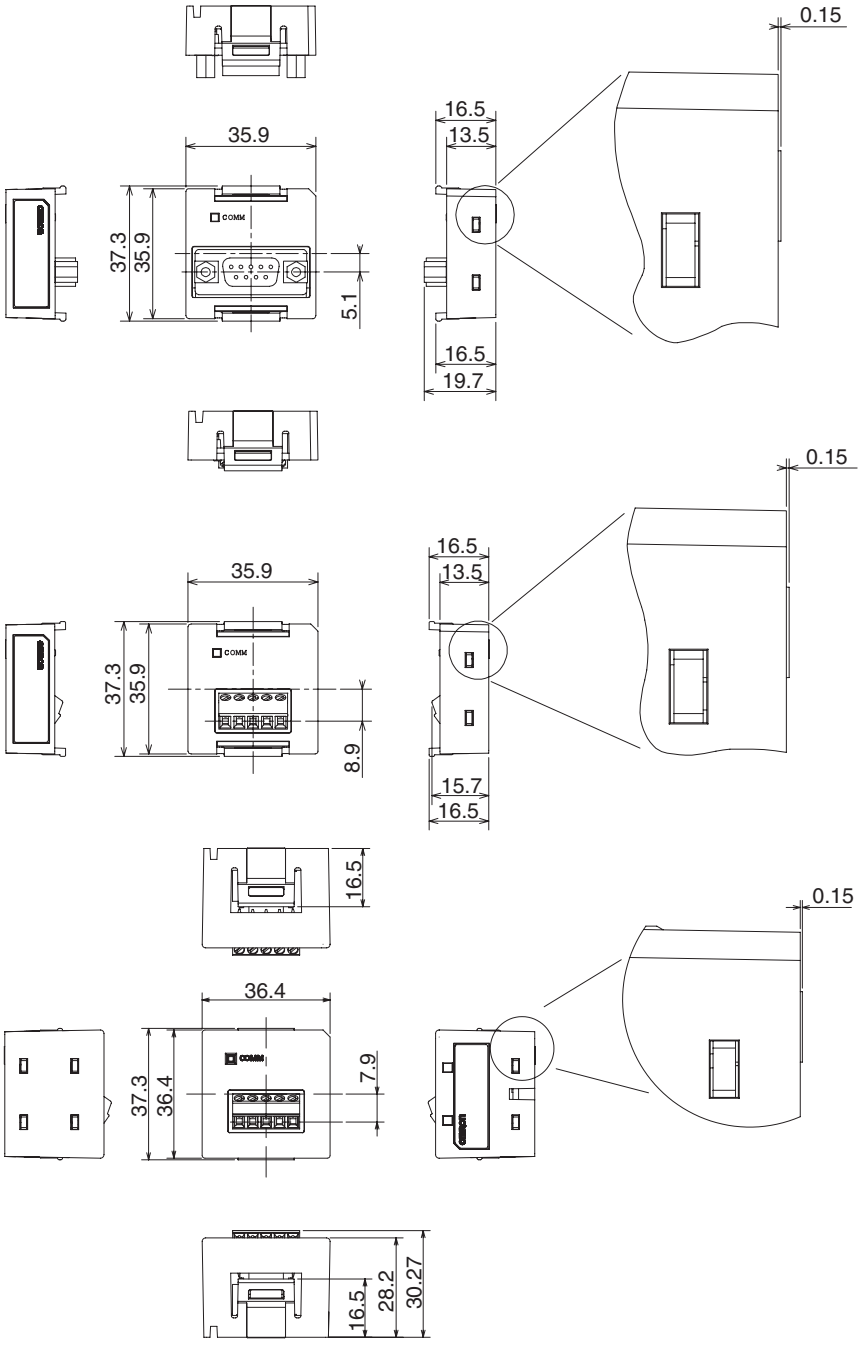

CP1W-DAM01 LCD Option Board

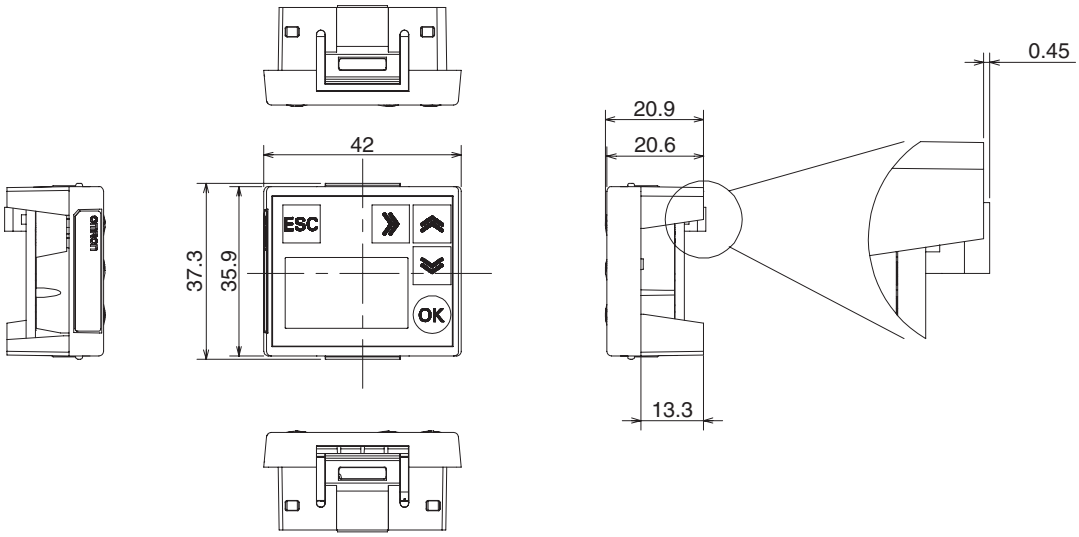

CP1W-CIF41 Ethernet Option Board

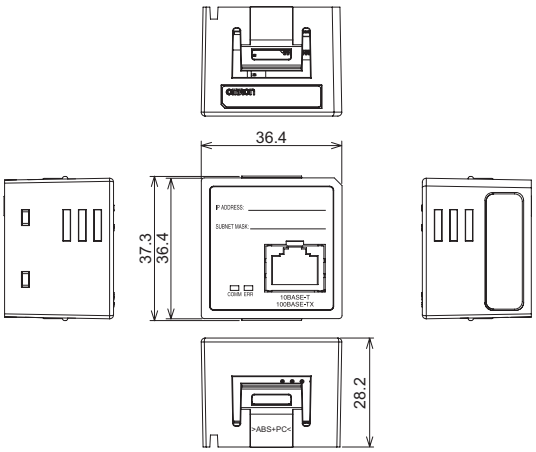

CP1W-ME05M Memory Cassette

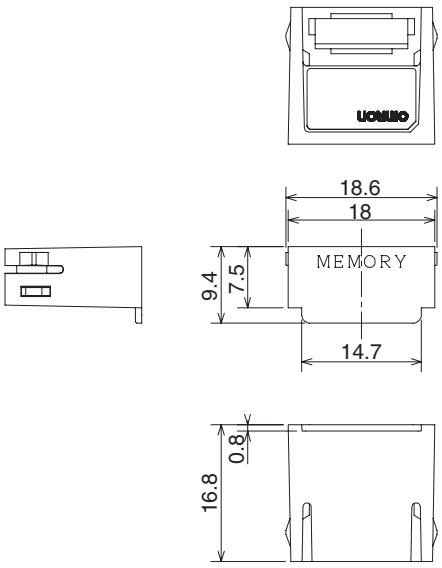

Expansion I/O Units

40-point I/O Units (CP1W/CPM1A-40EDR/40EDT/40EDT1)

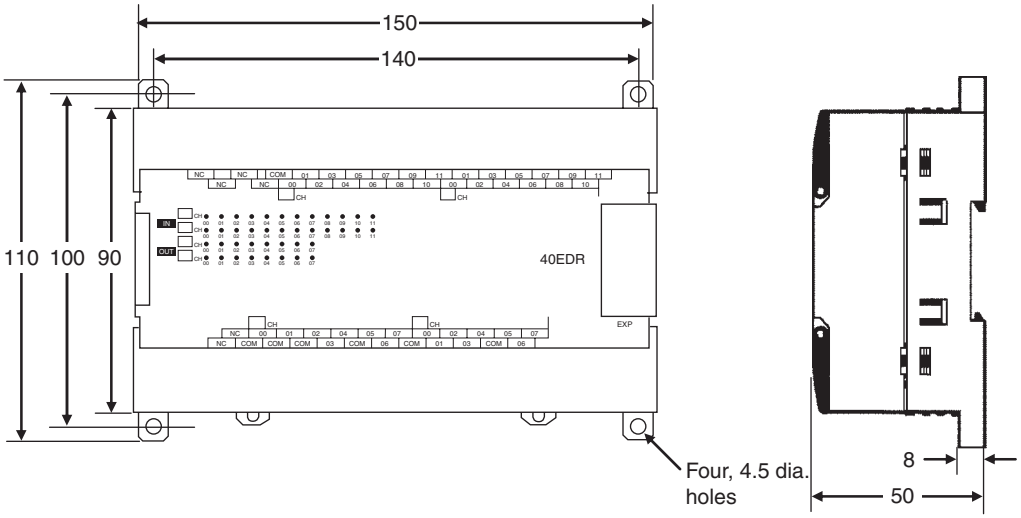

32-point Output Units (CP1W-32ER/32ET/32ET1)

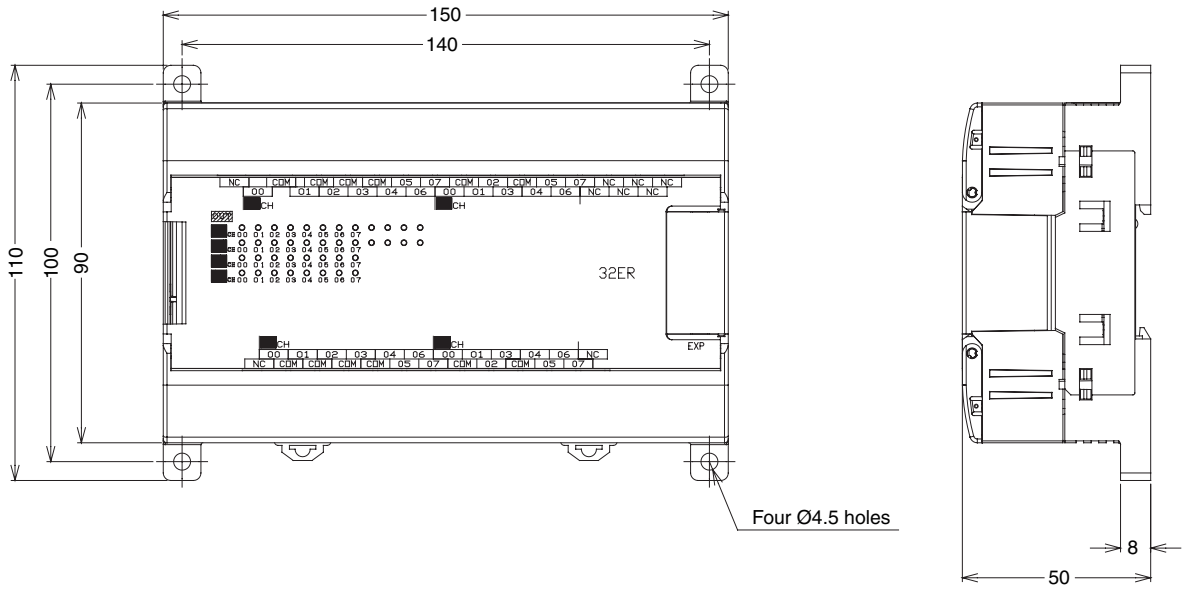

20-point I/O Units (CP1W/CPM1A-20EDR1/20EDT/20EDT1)

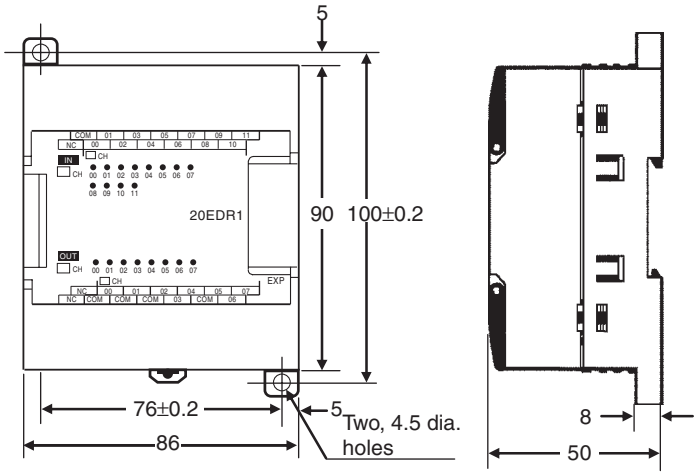

16-point Output Unit (CP1W/CPM1A-16ER/CP1W-16ET/16ET1)

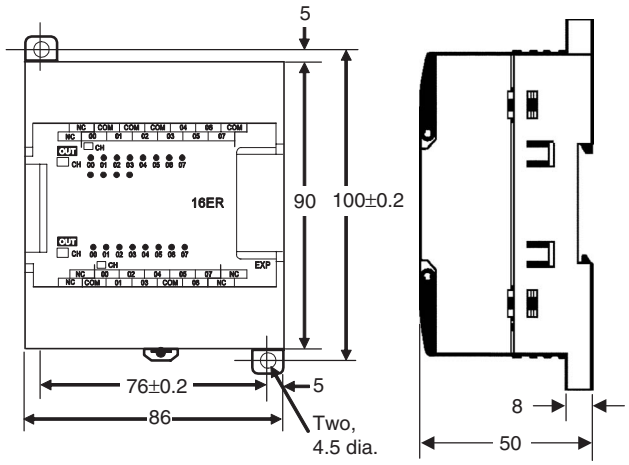

8-point I/O Units (CP1W/CPM1A-8ER/8ET/8ET1)

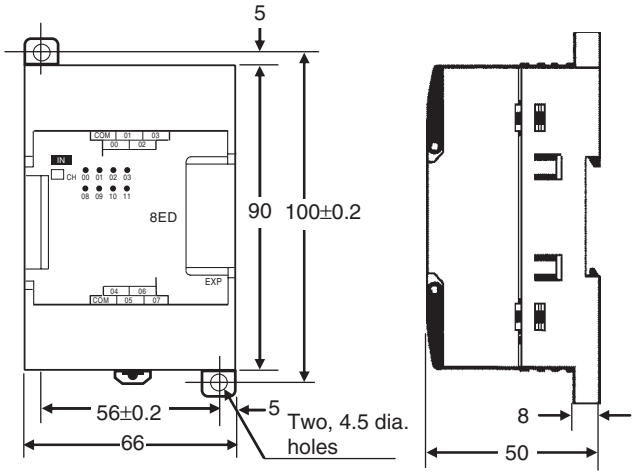

Expansion Units

CPM1A-MAD01/ CP1W/CPM1A/MAD11 Analog I/O Units

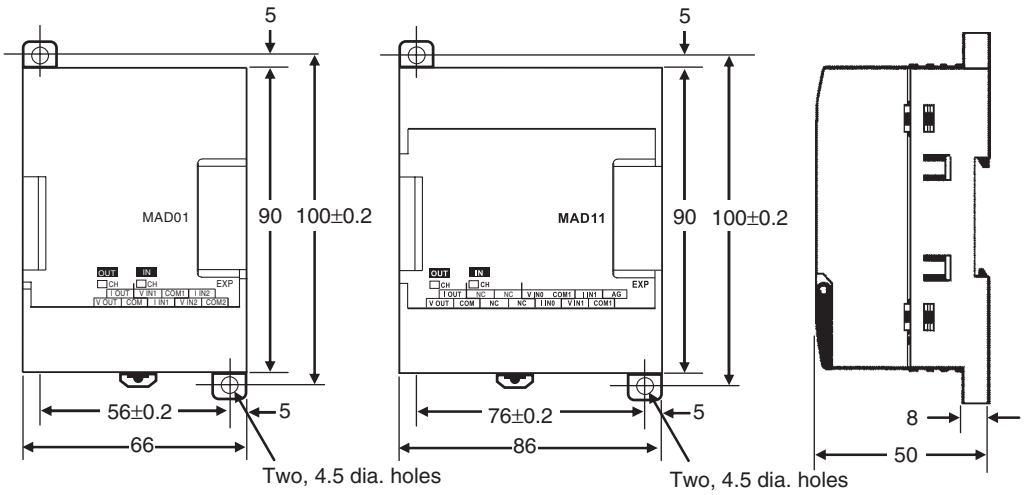

CP1W/CPM1A-TS□□□ Temperature Sensor Units

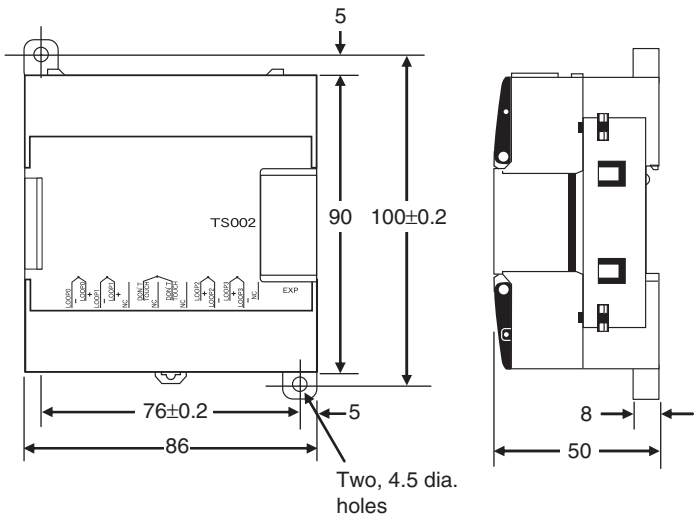

CPM1A-DRT21 DeviceNet I/O Link Unit

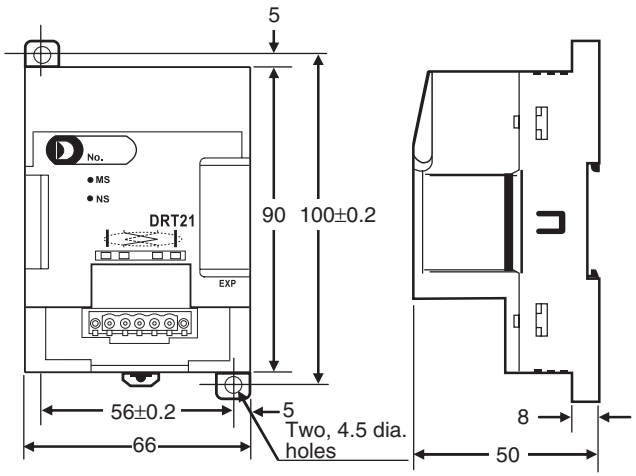

CP1W/CPM1A-SRT21 CompoBus/S I/O Link Unit

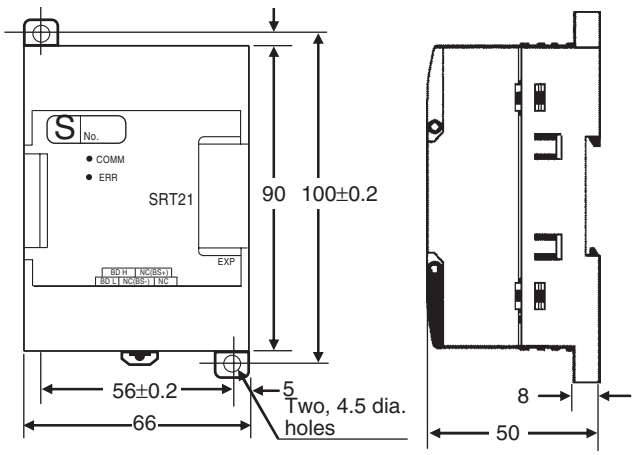

Appendix C
Auxiliary Area Allocations by Function

Initial Settings

Name	Address	Description	Access	Updated
IOM Hold Bit	A500.12	Turn this bit ON to retain the status of the I/O Memory when shifting from PROGRAM to RUN or MONITOR mode or vice versa or when turning ON the power supply. ON: I/O memory retained OFF: I/O memory not retained	Read/write	
Forced Status Hold BIt	A500.13	Turn this bit ON to preserve the status of bits that have been force-set or force-reset when shifting from PROGRAM to MONITOR mode or vice versa or when turning ON the power supply.	Read/write	

CPU Unit Settings

Name	Address	Description	Access	Updated
Status of DIP Switch Pin 6	A395.12	The status of pin 6 on the DIP switch on the front of the CPU Unit is written to this flag every cycle.	Read-only	
Manufacturing Lot Number	A310 and A311	The manufacturing lot number is stored in 5 digits hexadecimal. X, Y, and Z in the lot number are converted to 10, 11, and 12, respectively. Examples: Lot number 23805 A310 = 0823, A311 = 0005 Lot number 15X05 A310 =1015, A311 = 0005	Read-only	

DM Initial Value Settings

Name	Address	Description	Access	Updated
DM Initial Values Flag	A345.04	ON when DM initial values are stored in the flash memory.	Read-only	
DM Initial Values Read Error Flag	A751.11	ON when an error occurred in transferring DM initial values from the DM initial value area in flash memory to the DM Area.	Read-only	
DM Initial Values Save Execution Error Flag	A751.12	ON when the DM Initial Values Transfer Password (A752) is incorrect or when the DM Initial values area was not specified when starting to transfer DM initial values from the DM Area to the DM initial value area in flash memory.	Read-only	
DM Initial Values Save Error Flag	A751.13	ON when an error occurred in transferring DM initial values from the DM Area to the DM initial value area in flash memory.	Read-only	
DM Initial Values Save Flag	A751.14	ON while DM initial values are being transferred from the DM Area to the DM initial value area in flash memory. OFF when the transfer has been completed.	Read-only	
DM Initial Values Save Start Bit	A751.15	Turn ON this bit to start transferring DM initial values. This bit is valid only when a correct password is stored in A752 and the DM Area Initial Value Area is specified (i.e., when A753.00 is ON). The system will turn this bit OFF automatically when the transfer has been completed.	Read/Write	
DM Initial Values Transfer Password	A752	Set the passwords here to transfer DM initial values between the DM area and the DM initial value area in flash memory. The transfer will not be started unless the correct password is set. The transfer is started when A751.15 is turned ON. The password will be cleared by the system when the transfer has been completed. A5A5 hex: Save initial values from DM to flash	Read/Write	
DM Initial Values Save Area Specifications	A753.00	Specifies the area to be transferred to flash memory.	Read/Write	

Built-in Inputs

Analog Adjustment and External Analog Setting Input

Name	Address	Description	Access	Updated
Analog Adjustment PV	A642	Stores the value set on the analog adjuster as a hexadecimal value (resolution: 1/256). 0000 to 00FF hex	Read-only	When analog adjustment is turned
External Analog Setting Input PV	A643	Stores the value set from the external analog setting input as a hexadecimal value (resolution: 1/256). 0000 to 00FF hex	Read-only	

Input Interrupts, Interrupt Counters 0 to 5

Interrupt counter	Counter SV	Counter PV
Interrupt counter 0	A532	A536
Interrupt counter 1	A533	A537
Interrupt counter 2	A534	A538
Interrupt counter 3	A535	A539
Interrupt counter 4	A544	A548
Interrupt counter 5	A545	A549

Name	Description	Access	Updated
Interrupt Counter Counter SV	Used for an interrupt input in counter mode. Sets the count value at which the interrupt task will start. The corresponding interrupt task will start when the interrupt counter has counted this number of pulses.	Read/Write	• Retained when power is turned ON. • Retained when operation starts.
Interrupt Counter Counter PV	These words contain the interrupt counter PVs for interrupt inputs operating in counter mode. In increment mode, the counter PV starts incrementing from 0. When the counter PV reaches the counter SV, the PV is automatically reset to 0. In decrement mode, the counter PV starts decrementing from the counter SV. When the counter PV reaches the 0, the PV is automatically reset to the SV.	Read/Write	• Retained when power is turned ON. • Cleared when operation starts. • Updated when interrupt is generated.

High-speed Counters 0 to 3

Item		High-speed counter 0	High-speed counter 1	High-speed counter 2	High-speed counter 3
High-speed Counter PV	Leftmost 4 digits	A271	A273	A317	A319
	Rightmost 4 digits	A270	A272	A316	A318
High-speed Counter Range Comparison Condition Met Flag	Range 1	A274.00	A275.00	A320.00	A321.00
	Range 2	A274.01	A275.01	A320.01	A321.01
	Range 3	A274.02	A275.02	A320.02	A321.02
	Range 4	A274.03	A275.03	A320.03	A321.03
	Range 5	A274.04	A275.04	A320.04	A321.04
	Range 6	A274.05	A275.05	A320.05	A321.05
	Range 7	A274.06	A275.06	A320.06	A321.06
	Range 8	A274.07	A275.07	A320.07	A321.07
High-speed Counter Comparison In-progress Flag		A274.08	A275.08	A320.08	A321.08
High-speed Counter Overflow/Underflow Flag		A274.09	A275.09	A320.09	A321.09
High-speed Counter Count Direction		A274.10	A275.10	A320.10	A321.10
High-speed Counter Count Reset Bit		A531.00	A531.01	A531.02	A531.03
High-speed Counter Gate Flag		A531.08	A531.09	A531.10	A531.11

Name		Description	Read/Write	Updated
High-speed Counter PV		Contains the PV of the high-speed counter.	Read-only	• Cleared when power is turned ON. • Cleared when operation starts. • Updated each cycle during overseeing process. • Updated when PRV(881) instruction is executed for the corresponding counter.
High-speed Counter Range Comparison Condition Met Flags	Range 1	These flags indicate whether the PV is within the specified ranges when the high-speed counter is being operated in range-comparison mode. OFF: PV not in range ON: PV in range	Read-only	• Cleared when power is turned ON. • Cleared when operation starts. • Cleared when range comparison table is registered. • Updated each cycle during overseeing process. • Updated when PRV(881) instruction is executed to read range comparison results.
	Range 2			
	Range 3			
	Range 4			
	Range 5			
	Range 6			
	Range 7			
	Range 8			
High-speed Counter Comparison In-progress Flag		This flag indicates whether a comparison operation is being executed for the high-speed counter. OFF: Stopped. ON: Being executed.	Read-only	• Cleared when power is turned ON. • Cleared when operation starts. • Updated when comparison operation starts or stops.
High-speed Counter Overflow/Underflow Flag		This flag indicates when an overflow or underflow has occurred in the high-speed counter PV. (Used with the linear mode counting range only.) OFF: Normal ON: Overflow or underflow	Read-only	• Cleared when power is turned ON. • Cleared when operation starts. • Cleared when the PV is changed. • Updated when an overflow or underflow occurs.
High-speed Counter Count Direction		This flag indicates whether the high-speed counter is currently being incremented or decremented. The counter PV for the current cycle is compared with the PLC in last cycle to determine the direction. OFF: Decrementing ON: Incrementing	Read-only	• Setting used for high-speed counter, valid during counter operation.
High-speed Counter Reset Bit		When the reset method is set to Phase-Z signal + Software reset, the corresponding high-speed counter's PV will be reset if the phase-Z signal is received while this bit is ON. When the reset method is set to a software reset, the corresponding high-speed counter's PV will be reset in the cycle when this bit goes ON.	Read/Write	• Cleared when power is turned ON.
High-speed Counter Gate Bit		When a counter's Gate Bit is ON, the counter's PV will not be changed even if pulse inputs are received for the counter. When the bit is turned OFF again, counting will restart and the high-speed counter's PV will be updated. When the reset method is set to Phase-Z signal + Software reset, the Gate Bit is disabled while the corresponding Reset Bit is ON.	Read/Write	• Cleared when power is turned ON.

Built-in Outputs

Pulse Outputs 0, 1

Item		Pulse output 0	Pulse output 1
Pulse Output PV	Leftmost 4 digits	A277	A279
	Rightmost 4 digits	A276	A278
Pulse Output Accel/Decel Flag		A280.00	A281.00
Pulse Output Overflow/Underflow Flag		A280.01	A281.01
Pulse Output, Output Amount Set Flag		A280.02	A281.02
Pulse Output, Output Completed Flag		A280.03	A281.03
Pulse Output, Output In-progress Flag		A280.04	A281.04
Pulse Output No-origin Flag		A280.05	A281.05
Pulse Output At-origin Flag		A280.06	A281.06
Pulse Output, Output Stopped Error Flag		A280.07	A281.07
PWM Output, Output In-progress Flag		A283.00	A283.08

Item	Pulse output 0	Pulse output 1
Pulse Output Stop Error Code	A444	A445
Pulse Output Reset Bit	A540.00	A541.00
Pulse Output CW Limit Input Signal Flag	A540.08	A541.08
Pulse Output CCW Limit Input Signal Flag	A540.09	A541.09
Pulse Output Positioning Completed Signal	A540.10	A541.10

Name	Description	Read/Write	Updated
Pulse Output PV	Contain the number of pulses output from the corresponding pulse output port. PV range: 8000 0000 to 7FFF FFFF hex (-2,147,483,648 to 2,147,483,647) When pulses are being output in the CW direction, the PV is incremented by 1 for each pulse. When pulses are being output in the CCW direction, the PV is decremented by 1 for each pulse. PV after overflow: 7FFF FFFF hex PV after underflow: 8000 0000 hex **Note** If the coordinate system uses relative coordinates (undefined origin), the PV will be cleared to 0 when a pulse output starts, i.e. when a pulse output instruction (SPED(885), ACC(888), or PLS2(887)) is executed.	Read-only	• Cleared when power is turned ON. • Cleared when operation starts. • Updated each cycle during oversee process. • Updated when the PV is changed by the INI(880) instruction.
Pulse Output Accel/Decel Flag	This flag will be ON when pulses are being output according to an ACC(888) or PLS2(887) instruction and the output frequency is being changed in steps (accelerating or decelerating). OFF: Constant speed ON: Accelerating or decelerating	Read-only	• Cleared when power is turned ON. • Cleared when operation starts or stops. • Updated each cycle during oversee process.
Pulse Output Overflow/Underflow Flag	This flag indicates when an overflow or underflow has occurred in the pulse output PV. OFF: Normal ON: Overflow or underflow	Read-only	• Cleared when power is turned ON. • Cleared when operation starts. • Cleared when the PV is changed by the INI(880) instruction. • Updated when an overflow or underflow occurs.
Pulse Output, Output Amount Set Flag	ON when the number of output pulses has been set with the PULS(886) instruction. OFF: No setting ON: Setting made	Read-only	• Cleared when power is turned ON. • Cleared when operation starts or stops. • Updated when the PULS(886) instruction is executed. • Updated when pulse output stops.
Pulse Output, Output Completed Flag	ON when the number of output pulses set with the PULS(886) or PLS2(887) instruction has been output. OFF: Output not completed. ON: Output completed.	Read-only	• Cleared when power is turned ON. • Cleared when operation starts or stops. • Updated at the start or completion of pulse output in independent mode.
Pulse Output, Output In-progress Flag	ON when pulses are being output. OFF: Stopped ON: Outputting pulses.	Read-only	• Cleared when power is turned ON. • Cleared when operation starts or stops. • Updated when pulse output starts or stops.
Pulse Output No-origin Flag	ON when the origin has not been determined and goes OFF when the origin has been determined. OFF: Origin established. ON: Origin not established.	Read-only	• Cleared when power is turned ON. • Cleared when operation starts. • Updated when pulse output starts or stops. • Updated each cycle during the overseeing processes.
Pulse Output At-origin Flag	ON when the pulse output PV matches the origin (0). OFF: Not stopped at origin. ON: Stopped at origin.	Read-only	• Cleared when power is turned ON. • Updated each cycle during the overseeing processes.

Name	Description	Read/Write	Updated
Pulse Output, Output Stopped Error Flag	ON when an error occurred while outputting pulses in the pulse output 0 origin search function. OFF: No error ON: Stop error occurred.	Read-only	• Cleared when power is turned ON. • Updated when origin search starts. • Updated when a pulse output stop error occurs.
PWM Output, Output In-progress Flag	ON when pulses are being output from the PWM output. OFF: Stopped ON: Outputting pulses.	Read-only	• Cleared when power is turned ON. • Cleared when operation starts or stops. • Updated when pulse output starts or stops.
Pulse Output Stop Error Code	If a Pulse Output Stop Error occurs, the error code is written to this word.	Read-only	• Cleared when power is turned ON. • Updated when origin search starts. • Updated when a pulse output stop error occurs.
Pulse Output Reset Bit	The pulse output PV will be cleared when this bit is turned ON.	Read/Write	Cleared when power is turned ON.
Pulse Output CW Limit Input Signal Flag	This is the CW limit input signal for the pulse output, which is used in the origin search. To use this signal, write the input from the actual sensor as an input condition in the ladder program and output the result to this flag.	Read/Write	Cleared when power is turned ON.
Pulse Output CCW Limit Input Signal Flag	This is the CCW limit input signal for the pulse output, which is used in the origin search. To use this signal, write the input from the actual sensor as an input condition in the ladder program and output the result to this flag.	Read/Write	Cleared when power is turned ON.
Pulse Output Positioning Completed Signal	This is the positioning completed input signal used in the origin search for the pulse output. The input signal from the servo driver is output to this bit from the ladder program to enable using the signal.	Read/Write	Cleared when power is turned ON.

Inverter Positioning

Inverter Positioning 0 and 1

Item		Inverter positioning 0	Inverter positioning 1
Inverter Frequency Command Value		A23	A33
Present Value of Unsigned Output Value	Leftmost 4 digits	A21	A31
	Rightmost 4 digits	A20	A30
Present Value of Signed Output Value	Leftmost 4 digits	A25	A35
	Rightmost 4 digits	A24	A34
Operation Command Flag		A26.00	A36.00
Forward Operation Command Flag		A26.01	A36.01
Reverse Operation Command Flag		A26.02	A36.02
In-position Flag		A26.03	A36.03
Error Counter Error Flag		A26.04	A36.04
Error Counter Pulse Output Flag		A26.05	A36.05
Error Counter Pulse Output Acceleration/Deceleration Flag		A26.06	A36.06
Error Counter Alarm Flag		A26.07	A36.07
Inverter Positioning Output Value Sign Flag		A26.15	A36.15
Error Counter Present Value, Signed		A22	A32
Present Value of Pulse Output to Inverter, Relative Value	Leftmost 4 digits	A29	A39
	Rightmost 4 digits	A28	A38
Error Counter Reset Bit		A562.00	A563.00
Error Counter Disable Bit		A562.01	A563.01
Present Value of High-speed Counter	Leftmost 4 digits	A271	A273
	Rightmost 4 digits	A270	A272
Present Value of Internal Pulse Output	Leftmost 4 digits	A271	A279
	Rightmost 4 digits	A270	A278

Name	Description	Read/Write	Updated
Inverter Frequency Command Value	This word contains the automatically calculated frequency command value for the inverter. Data range: 0000 to FFFF hex (0.00 to 655.35 Hz) (0.01-Hz increments, unsigned) Set the Power Supply Frequency for One Motor Revolution per Second, Number of Encoder Pulses for One Motor Revolution, and Error Counter Cycle in the PLC Setup before using this value.	Read	• Cleared when power is turned ON. • Cleared when operation starts. • Cleared when an error occurs in the error counter. • Updated each error counter cycle.
Present Value of Unsigned Output Value	These words contain the present value of the unsigned output value (output value = present value of error counter × error counter cycle (s) × gain). Data range: 0000 0000 to 8000 0000 hex (0 to 2,147,483,648) The maximum and minimum output values are applied.	Read	• Cleared when power is turned ON. • Cleared when operation starts. • Cleared when an error occurs in the error counter. • Updated each error counter cycle.
Present Value of Signed Output Value	These words contain the present value of the signed output value (output value = present value of error counter × error counter cycle (s) × gain). Data range: 8000 0000 to 7FFF FFFF hex (−214,748,348 to 214,748,347) The maximum and minimum output values are applied.	Read	• Cleared when power is turned ON. • Cleared when operation starts. • Cleared when an error occurs in the error counter. • Updated each error counter cycle.
Operation Command Flag	This flag turns ON during an inverter positioning operation command. ON: Operation command executed. OFF: Stop command executed.	Read	• Turned OFF when power is turned ON. • Turned OFF when operation starts. • Turned OFF when CPU Unit operation stops. • Turned OFF when inverter positioning is stopped (immediate stop) using INI instruction.
Forward Operation Command Flag	This flag turns ON during an inverter positioning forward operation command. ON: Forward command in progress OFF: Reverse command in progress or stopped	Read	• Turned OFF when power is turned ON. • Turned OFF when CPU Unit operation starts. • Turned OFF when CPU Unit operation stops. • Turned OFF when error counter present value is 0 or less than 0 (negative). • Turned ON when error counter present value is greater than 0 (positive).
Reverse Operation Command Flag	This flag turns ON during an inverter positioning reverse operation command. ON: Reverse command in progress OFF: Forward command in progress or stopped	Read	• Turned OFF when power is turned ON. • Turned OFF when CPU Unit operation starts. • Turned OFF when CPU Unit operation stops. • Turned OFF when error counter present value is 0 or greater than 0 (positive). • Turned ON when error counter present value is less than 0 (negative).
In-position Flag	This flag turns ON when inverter positioning is in position. ON: In position OFF: Not in position	Read	• Turned OFF when power is turned ON. • Turned OFF when CPU Unit operation starts. • Turned OFF when CPU Unit operation stops. • Turned OFF when pulses are being output to error counter. • Turned OFF absolute value of error counter present value is greater than in-position range. • Turned OFF when pulse output to error counter is stopped and absolute value of error counter present value is less than in-position range

Name	Description	Read/Write	Updated
Error Counter Error Flag	This flag turns ON when an error occurs in the error counter for inverter positioning. ON: Error counter error OFF: No error	Read	• Turned OFF when power is turned ON. • Turned OFF when CPU Unit operation starts. • Turned OFF when CPU Unit operation stops. • Turned OFF when error counter error is reset. • Turned ON when pulse output to error counter is stopped and absolute value of error counter present value is greater than or equal to error counter error detection value.
Error Counter Pulse Output Flag	This flag is ON while pulses are being output to the output counter for inverter positioning. ON: Pulses being output OFF: Pulse output stopped	Read	• Turned OFF when power is turned ON. • Turned OFF when CPU Unit operation starts. • Turned OFF when CPU Unit operation stops. • Turned OFF when error counter error is reset. • Turned ON when pulse output to error counter is stopped and absolute value of error counter present value is greater than or equal to error counter error detection value.
Error Counter Pulse Output Acceleration/Deceleration Flag	This flag is ON while pulse output to the output counter for inverter positioning is accelerating or decelerating. ON: Pulse output to the error counter is accelerating or decelerating (i.e., the frequency is changing) OFF: Pulse output to the error counter is constant	Read	• Turned OFF when power is turned ON. • Turned OFF when CPU Unit operation starts. • Turned OFF when CPU Unit operation stops. • Turned OFF during output of a constant pulse frequency to error counter. • Turned OFF when pulse output to error counter is stopped (including immediate stops and deceleration stops). • Turned ON when pulse output frequency to error counter is changed by ACC or PLS2 instruction.
Error Counter Alarm Flag	This flag turns ON when an alarm occurs in the error counter for inverter positioning. ON: Error counter alarm OFF: No alarm	Read	• Turned OFF when power is turned ON. • Turned OFF when CPU Unit operation starts. • Turned OFF when CPU Unit operation stops. • Turned OFF when error counter alarm is reset. • Turned ON when pulse output to error counter is stopped and absolute value of error counter present value is greater than or equal to error counter alarm detection value.
Inverter Positioning Output Value Sign Flag	This flag is ON when the inverter positioning output value is positive and is OFF when it is negative. ON: Positive value OFF: Negative value	Read	• Turned ON when signed output value is between 0000 0000 and 7FFF FFFF hex. • Turned OFF when signed output value is between FFFF FFFF and 8000 0000 hex.
Error Counter Present Value, Signed	This word contains the present value of the error counter. Data range: 8000 to 7FFF hex (−32,768 to 32,767)	Read	• Cleared when power is turned ON. • Cleared when operation starts. • Cleared when error counter is reset. • Held when Error Counter Disable Bit (A562.01) is turned ON. • Updated each error counter cycle.
Present Value of Pulse Output to Inverter, Relative Value	These words contain the relative value of the internal pulse output value when pulses are being output to the error counter. Data range: 8000 0000 to 7FFF FFFF hex (−2,147,483,648 to 2,147,483,647)	Read	• Cleared when power is turned ON. • Cleared when operation starts. • Cleared when pulse output to error counter is started. • Updated each error counter cycle.

Name	Description	Read/Write	Updated
Error Counter Reset Bit	Turn ON this bit to reset the Error Counter Present Value and turn OFF the Error Counter Error Flag.	Read/write	---
Error Counter Disable Bit	Turn ON this bit to hold the error counter value. ON: Error counter value held. OFF: Error counter value not held.	Read/write	---
Present Value of High-speed Counter	These words contain the present value of the high-speed counter.	Read	• Cleared when power is turned ON. • Cleared when operation starts. • Updated each cycle during oversee process. • Updated when present value is read using PRV instruction.
Present Value of Internal Pulse Output, Absolute Value for Absolute Coordinates	These words contain the absolute value of the actual movement in relation to the internal pulse origin when pulses are being output to the error counter. Data range: 8000 0000 to 7FFF FFFF hex (−2,147,483,648 to 2,147,483,647)	Read	• Cleared when power is turned ON. • Cleared when operation starts. • Updated each error counter cycle.

System Flags

Name	Address	Description	Access	Updated
First Cycle Flag	A200.11	ON for one cycle after PLC operation begins (after the mode is switched from PROGRAM to RUN or MONITOR, for example).	Read-only	
Initial Task Execution Flag	A200.15	ON when a task is executed for the first time, i.e., when it changes from INI to RUN status.	Read-only	
Task Started Flag	A200.14	When a task switches from WAIT or INI to RUN status, this flag will be turned ON within the task for one cycle only. **Note** The only difference between this flag and A200.15 is that this flag also turns ON when the task switches from WAIT to RUN status.	Read-only	
Maximum Cycle Time	A262 to A263	These words contain the maximum cycle time since the start of PLC operation. The cycle time is recorded in 8-digit hexadecimal with the leftmost 4 digits in A263 and the rightmost 4 digits in A262. 0 to FFFFFFFF: 0 to 429,496,729.5 ms (0.1-ms units)	Read-only	
Present Cycle Time	A264 to A265	These words contain the present cycle time in 8-digit hexadecimal with the leftmost 4 digits in A265 and the rightmost 4 digits in A264.	Read-only	
10-ms Incrementing Free Running Timer	A0	This word contains the system timer used after the power is turned ON. A value of 0000 hex is set when the power is turned ON and this value is automatically incremented by 1 every 10 ms. The value returns to 0000 hex after reaching FFFF hex (655,350 ms), and then continues to be automatically incremented by 1 every 10 ms. **Note:** The timer will continue to be incremented when the operating mode is switched to RUN mode. Example: The interval can be counted between processing A and processing B without requiring timer instructions. This is achieved by calculating the difference between the value in A0 for processing A and the value in A0 for processing B. The interval is counted in 10 ms units.	Read-only	
100-ms Incrementing Free Running Timer	A1	This word contains the system timer used after the power is turned ON. A value of 0000 hex is set when the power is turned ON and this value is automatically incremented by 1 every 100 ms. The value returns to 0000 hex after reaching FFFF hex (6,553,500 ms), and then continues to be automatically incremented by 1 every 100 ms. **Note:** The timer will continue to be incremented when the operating mode is switched to RUN mode. Example: The interval can be counted between processing A and processing B without requiring timer instructions. This is achieved by calculating the difference between the value in A0 for processing A and the value in A0 for processing B. The interval is counted in 100 ms units.	Read-only	

Task Information

Name	Address	Description	Access	Updated
Task Number when Program Stopped	A294	This word contains the task number of the task that was being executed when program execution was stopped because of a program error.	Read-only	
Maximum Interrupt Task Processing Time	A440	Contains the Maximum Interrupt Task Processing Time in units of 0.1 ms as hexadecimal data.	Read-only	
Interrupt Task with Max. Processing Time	A441	Contains the task number of the interrupt task with the maximum processing time. Hexadecimal values 8000 to 80FF correspond to task numbers 00 to FF. Bit 15 is turned ON when an interrupt has occurred.	Read-only	
IR/DR Operation between Tasks	A99.14	ON when index and data registers are shared between all tasks. OFF: Independent ON: Shared (default)	Read-only	

Debugging Information

Online Editing

Name	Address	Description	Access	Updated
Online Editing Wait Flag	A201.10	ON when an online editing process is waiting.	Read-only	
Online Editing Processing Flag	A201.11	ON when an online editing process is being executed.	Read-only	
Online Editing Disable Bit Validator	A527.00 to A527.07	The Online Editing Disable Bit (A527.09) is valid only when this byte contains 5A.	Read/write	
Online Editing Disable Bit	A527.09	Turn this bit ON to disable online editing. The setting of this bit is valid only when A527.00 to A527.07 have been set to 5A.	Read/write	

Output Control

Name	Address	Description	Access	Updated
Output OFF Bit	A500.15	Turn this bit ON to turn OFF all outputs from the CPU Unit, CPM1A Units, and Special I/O Units.	Read/write	

Differentiate Monitor

Name	Address	Description	Access	Updated
Differentiate Monitor Completed Flag	A508.09	ON when the differentiate monitor condition has been established during execution of differentiation monitoring.	Read/write	

Data Tracing

Name	Address	Description	Access	Updated
Sampling Start Bit	A508.15	When a data trace is started by turning this bit ON from the CX-Programmer, the PLC will begin storing data in Trace Memory by one of the three following methods: Data is sampled at regular intervals (10 to 2,550 ms). Data is sampled when TRSM(045) is executed in the program. Data is sampled at the end of every cycle.	Read/write	
Trace Start Bit	A508.14	Turn this bit ON to establish the trigger condition. The offset indicated by the delay value (positive or negative) determines which data samples are valid.	Read/write	
Trace Busy Flag	A508.13	ON when the Sampling Start Bit (A508.15) is turned ON. OFF when the trace is completed.	Read/write	
Trace Completed Flag	A508.12	ON when sampling of a region of trace memory has been completed during execution of a trace.	Read/write	
Trace Trigger Monitor Flag	A508.11	ON when a trigger condition is established by the Trace Start Bit (A508.14). OFF when the next data trace is started by the Sampling Start Bit (A508.15).	Read/write	

Comment Memory

Name	Address	Description	Access	Updated
Program Index File Flag	A345.01	Turns ON when the comment memory contains a program index file. OFF: No file ON: File present	Read-only	
Comment File Flag	A345.02	Turns ON when the comment memory contains a comment file. OFF: No file ON: File present	Read-only	
Symbol Table File Flag	A345.03	Turns ON when the comment memory contains a symbol table file. OFF: No file ON: File present	Read-only	

Error Information

Error Log, Error Code

Name	Address	Description	Access	Updated
Error Log Area	A100 to A199	When an error has occurred, the error code, error contents, and error's time and date are stored in the Error Log Area.	Read-only	
Error Log Pointer	A300	When an error occurs, the Error Log Pointer is incremented by 1 to indicate the location where the next error record will be recorded as a hexadecimal offset from the beginning of the Error Log Area (A100 to A199).	Read-only	
Error Log Pointer Reset Bit	A500.14	Turn this bit ON to reset the Error Log Pointer (A300) to 00.	Read/write	
Error Code	A400	When a non-fatal error (user-defined FALS(006) or system error) or a fatal error (user-defined FALS(007) or system error) occurs, the 4-digit hexadecimal error code is written to this word.	Read-only	

Memory Error Information

Name	Address	Description	Access	Updated
Memory Error Flag (fatal error)	A401.15	ON when an error occurred in memory or there was an error in automatic transfer from the Memory Cassette when the power was turned ON. CPU Unit operation will stop and the ERR/ALM indicator on the front of the CPU Unit will light. **Note** A403.09 will be turned ON if there was an error during automatic transfer at startup. The automatic transfer at startup error cannot be cleared without turning OFF the PLC.	Read-only	
Memory Error Location	A403.00 to A403.08	When a memory error occurs, the Memory Error Flag (A40115) is turned ON and one of the following flags is turned ON to indicate the memory area where the error occurred A403.00: User program A403.04: PLC Setup A403.07: Routing Table	Read-only	
Startup Memory Card Transfer Error Flag	A403.09	ON when automatic transfer at startup has been selected and an error occurs during automatic transfer. An error will occur if there is a transfer error, the specified file does not exist, or the Memory Cassette is not installed. (This flag will be turned OFF when the error is cleared by turning the power OFF. The error cannot be cleared without turning the power OFF.)	Read-only	
Flash Memory Error	A403.10	ON when the flash memory fails.	Read-only	

Program Error Information

Name	Address	Description	Access	Updated
Other Fatal Error Flag	A401.00	ON when a fatal error that is not defined for A401.01 to A401.15 occurs. Detailed information is output to the bits of A314. OFF: No other fatal error ON: Other fatal error		
Program Error Flag (fatal error)	A401.09	ON when program contents are incorrect. CPU Unit operation will stop.	Read-only	When error occurs
Program Error Task	A294	This word contains the task number of the task that was being executed when program execution was stopped because of a program error.	Read-only	
Instruction Processing Error Flag	A295.08	This flag and the Error Flag (ER) will be turned ON when an instruction processing error has occurred and the PLC Setup has been set to stop operation for an instruction error.	Read-only	
Indirect DM/EM BCD Error Flag	A295.09	This flag and the Access Error Flag (AER) will be turned ON when an indirect DM BCD error has occurred and the PLC Setup has been set to stop operation an indirect DM BCD error. (This error occurs when the content of an indirectly addressed DM word is not BCD although BCD mode has been selected.)	Read-only	
Illegal Access Error Flag	A295.10	This flag and the Access Error Flag (AER) will be turned ON when an illegal access error has occurred and the PLC Setup has been set to stop operation an illegal access error. (This error occurs when a region of memory is accessed illegally.)	Read-only	
No END Error Flag	A295.11	ON when there isn't an END(001) instruction in each program within a task	Read-only	
Task Error Flag	A295.12	ON when a task error has occurred. The following conditions generate a task error. There isn't even one regular task that is executable (started). There isn't a program allocated to the task.	Read-only	
Differentiation Overflow Error Flag	A295.13	ON when the allowed value for Differentiation Flags which correspond to differentiation instructions has been exceeded.	Read-only	
Illegal Instruction Error Flag	A295.14	ON when a program that cannot be executed has been stored.	Read-only	
UM Overflow Error Flag	A295.15	ON when the last address in UM (User Memory) has been exceeded	Read-only	
Program Address Where Program Stopped	A298 and A299	These words contain the 8-digit binary program address of the instruction where program execution was stopped due to a program error. A298: Rightmost 4 digits, A299: Leftmost 4 digits	Read-only	

FAL/FALS Error Information

Name	Address	Description	Access	Updated
FAL Error Flag (non-fatal error)	A402.15	ON when a non-fatal error is generated by executing FAL(006). The CPU Unit will continue operating.	Read-only	
Executed FAL Number Flags	A360 to A391	The flag corresponding to the specified FAL number will be turned ON when FAL(006) is executed. Bits A360.01 to A391.15 correspond to FAL numbers 001 to 511.	Read-only	
FALS Error Flag (fatal error)	A401.06	ON when a fatal error is generated by the FALS(006) instruction. The CPU Unit will stop operating.	Read-only	
FAL/FALS Number for System Error Simulation	A529	Set a dummy FAL/FALS number to use to simulate the system error using FAL(006) or FALS(007). Set the FAL/FALS number. 0001 to 01FF hex: FAL/FALS numbers 1 to 511 0000 or 0200 to FFFF hex: No FAL/FALS number for system error simulation. (No error will be generated.)	Read/write	

PLC Setup Error Information

Name	Address	Description	Access	Updated
PLC Setup Error Flag (non-fatal error)	A402.10	ON when there is a setting error in the PLC Setup.	Read-only	
PLC Setup Error Location	A406	When there is a setting error in the PLC Setup, the location of that error is written to A406 in 4-digit hexadecimal.	Read-only	

I/O Information

Name	Address	Description	Access	Updated
Too Many I/O Points Flag (fatal error)	A401.11	ON when the number of Expansion Units and Expansion I/O Units exceeds the limit, when the number of words allocated to these Units exceeds the limit, are mounted.	Read-only	
Too Many I/O Points, Details	A407.00 to A407.12	Always 0000 hex.	Read-only	
Too Many I/O Points, Cause	A407.13 to A407.15	The 3-digit binary value of these bits indicates the cause of the Too Many I/O Points Error. 010: Too many words 011: Too many Units	Read-only	
I/O Bus Error Flag (fatal error)	A401.14	ON in the following cases: • When an error occurs in a data transfer between the CPU Unit and a Expansion Unit or Expansion I/O Unit. If this happens, 0A0A hex will be output to A404. • When an error occurs in a data transfer between the CPU Unit. If this happens, 0000 hex will be output to A404 to indicate the first Unit, 0001 hex to indicate the second Unit, and 0F0F hex to indicate an undetermined Unit. CPU Unit operation will stop and the ERR/ALM indicator on the front of the CPU Unit will light. (This flag will be turned OFF when the error is cleared.)	Read-only	
I/O Bus Error Slot Number	A404	Contains information on I/O bus errors. The CPU Unit will stop operating and the ERR/ALM indicator on the front of the CPU Unit will light. (A401.04 (I/O Bus Error Flag) will turn ON.) (This information will be cleared when the error is cleared.) 0A0A hex: Expansion Unit or Expansion I/O Unit error	Read-only	
Duplication Error Flag (fatal error)	A401.13	ON in the following cases: • Two CPU Bus Units have been assigned the same unit number.	Read-only	
Unit Error Flags	A436.00 to A436.02	ON when an error occurs in an Expansion Unit or Expansion I/O Unit. A436.00: 1st Unit A436.10: 2nd Unit A436.02: 3rd Unit CP1W/CPM1A-TS002 and CP1W/CPM1A-TS102 are each counted as two Units.	Read-only	
Number of Connected Units	A437	Stores the number of Expansion Units and Expansion I/O Units connected as a hexadecimal number. **Note** This information is valid only when a Too Many I/O Points error has occurred. CP1W/CPM1A-TS002 and CP1W/CPM1A-TS102 are each counted as two Units.	Read-only	

Other PLC Operating Information

Name	Address	Description	Access	Updated
Battery Error Flag (non-fatal error)	A402.04	ON if the CPU Unit's battery is disconnected or its voltage is low and the Detect Battery Error setting has been set in the PLC Setup.	Read-only	
Cycle Time Too Long Flag (fatal error)	A401.08	ON if the cycle time exceeds the maximum cycle time set in the PLC Setup (the cycle time monitoring time).	Read-only	
FPD Teaching Bit	A598.00	Turn this bit ON to set the monitoring time automatically with the teaching function.	Read/write	

Name	Address	Description	Access	Updated
Option Board Error Flag	A315.13	ON when the Option Board is removed while the power is being supplied. CPU Unit operation will continue and the ERR/ALM indicator will flash. OFF when the error has been cleared.	Read-only	When an error occurs
Flash Memory Error Flag	A315.15	ON when writing to the internal flash memory fails. CPU Unit operation will continue and the ERR/ALM indicator will flash. OFF when the error has been cleared.	Read-only	When an error occurs
Other Fatal Error Flag	A402.00	ON when a non-fatal error that is not defined for A402.01 to A402.15 occurs. Detailed information is output to the bits of A314. OFF: No other fatal error ON: Other fatal error	Read-only	When an error occurs

Clock

Clock Information

Name	Address	Description	Access	Updated
Clock Data	The clock data from the clock built into the CPU Unit is stored here in BCD.		Read-only	
	A351.00 to A351.07	Seconds: 00 to 59 (BCD)		
	A351.08 to A351.15	Minutes: 00 to 59 (BCD)		
	A352.00 to A352.07	Hour: 00 to 23 (BCD)		
	A352.08 to A352.15	Day of the month: 01 to 31 (BCD)		
	A353.00 to A353.07	Month: 01 to 12 (BCD)		
	A353.08 to A353.15	Year: 00 to 99 (BCD)		
	A354.00 to A354.07	Day of the week: 00: Sunday, 01: Monday, 02: Tuesday, 03: Wednesday, 04: Thursday, 05: Friday, 06: Saturday		

Note The clock data is stored in the CPU Unit as BCD.

Operation Start and End Times

Name	Address	Description	Access	Updated
Operation Start Time	A515 to A517	The time that operation started as a result of changing the operating mode to RUN or MONITOR mode is stored here in BCD. A515.00 to A515.07: Seconds (00 to 59) A515.08 to A515.15: Minutes (00 to 59) A516.00 to A516.07: Hour (00 to 23) A516.08 to A516.15: Day of month (01 to 31) A517.00 to A517.07: Month (01 to 12) A517.08 to A517.15: Year (00 to 99) **Note** The previous start time is stored after turning ON the power supply until operation is started.	Read/write	
Operation End Time	A518 to A520	The time that operation stopped as a result of changing the operating mode to PROGRAM mode is stored here in BCD. A518.00 to A518.07: Seconds (00 to 59) A518.08 to A518.15: Minutes (01 to 59) A519.00 to A519.07: Hour (00 to 23) A519.08 to A519.15: Day of month (01 to 31) A520.00 to A520.07: Month (01 to 12) A520.08 to A520.15: Year (00 to 99) **Note** If an error occurs in operation, the time of the error will be stored. If the operating mode is then changed to PROGRAM mode, the time that PROGRAM mode was entered will be stored.	Read/write	

Power Supply Information

Name	Address	Description	Access	Updated
Startup Time	A510 and A511	These words contain the time at which the power was turned ON. The contents are updated every time that the power is turned ON. The data is stored in BCD. A510.00 to A510.07: Second (00 to 59) A510.08 to A510.15: Minute (00 to 59) A511.00 to A511.07: Hour (00 to 23) A511.08 to A511.15: Day of month (01 to 31)	Read/write	
Power Interruption Time	A512 and A513	These words contain the time at which the power was interrupted. The contents are updated every time that the power is interrupted. The data is stored in BCD. A512.00 to A512.07: Second (00 to 59) A512.08 to A512.15: Minute (00 to 59) A513.00 to A513.07: Hour (00 to 23) A513.08 to A513.15: Day of month (01 to 31) (These words are not cleared at startup.)	Read/write	
Number of Power Interruptions	A514	Contains the number of times that power has been interrupted since the power was first turned ON. The data is stored in binary. To reset this value, overwrite the current value with 0000.	Read/write	
Total Power ON Time	A523	Contains the total time that the PLC has been ON in 10-hour units. The data is stored in binary and it is updated every 10 hours. To reset this value, overwrite the current value with 0000.	Read/write	

Flash Memory Backup Information

Name	Address	Description	Access	Updated
User Program Date	A90 to A93	These words contain in BCD the date and time that the user program was last overwritten. A90.00 to A90.07: Seconds (00 to 59) A90.08 to A90.15: Minutes (00 to 59) A91.00 to A91.07: Hour (00 to 23) A91.08 to A91.15: Day of month (01 to 31) A92.00 to A92.07: Month (01 to 12) A92.08 to A92.15: Year (00 to 99) A93.00 to A93.07: Day of the week (00 to 06) (00: Sunday, 01: Monday, 02: Tuesday, 03: Wednesday, 04: Thursday, 05: Friday, 06: Saturday)	Read-only	
Parameter Date	A94 to A97	These words contain in BCD the date and time that the parameters were last overwritten. A94.00 to A94.07: Seconds (00 to 59) A94.08 to A94.15: Minutes (00 to 59) A95.00 to A95.07: Hour (00 to 23) A95.08 to A95.15: Day of month (01 to 31) A96.00 to A96.07: Month (01 to 12) A96.08 to A96.15: Year (00 to 99) A97.00 to A97.07: Day of the week (00 to 06) (00: Sunday, 01: Monday, 02: Tuesday, 03: Wednesday, 04: Thursday, 05: Friday, 06: Saturday)	Read-only	

Memory Cassette Information

Name	Address	Description	Access	Updated
Memory Cassette Access Status	A342	A342.03: ON when data is being written to the Memory Cassette or the Memory Cassette is being initialized. OFF when processing has been completed. A342.04: ON when data is being read from the Memory Cassette. OFF when processing has been completed. A342.05: ON when data is being compared with data on the Memory Cassette. OFF when processing has been completed. A342.07: ON when an error occurs in initializing the Memory Cassette. OFF the next time the Memory Cassette is accessed normally (initialized, written, read, or compared). A342.08: ON when an error occurs in writing the Memory Cassette. OFF the next time the Memory Cassette is accessed normally (initialized, written, read, or compared). A342.10: ON when an error occurs in reading or comparing the Memory Cassette. OFF the next time the Memory Cassette is accessed normally (initialized, written, read, or compared). A342.12: ON when the data in the CPU Unit is not the same as the data in the Memory Cassette when a verification operation is performed. OFF the next time the Memory Cassette is accessed normally (initialized, written, read, or compared). A342.13: ON when the Memory Cassette is being accessed. OFF when processing has been completed. A342.15: ON when a Memory Cassette is mounted. OFF when a Memory Cassette is not mounted.	Read-only	
Memory Casette Verification Results	A494	Stores the results of comparing data in the Memory Cassette and CPU Unit. Each bit turns ON to indicate status. A494.00: User program is different. A494.01: Function block sources are different. A494.02: Parameter area is different. A494.03: Symbol table is different. A494.04: Comments are different. A494.05: Program indices are different. A494.06: Data memory is different. A494.07: DM initial values are different.	Read-only	

Information on Read Protection Using a Password

Name	Address	Description	Access	Updated
UM Read Protection Flag	A99.00	Indicates whether the entire user program in the PLC is read-protected. OFF: UM not read-protected. ON: UM read-protected.	Read-only	
Task Read Protection Flag	A99.01	Indicates whether read protection is set for individual tasks. OFF: Tasks not read-protected. ON: Tasks read-protected.	Read-only	
Program Write Protection for Read Protection	A99.02	Indicates whether the program is write-protected. OFF: Write-enabled. ON: Write-protected.	Read-only	
Enable/Disable Bit for Program Backup	A99.03	Indicates whether creating a backup program file (.OBJ) is enabled or disabled. OFF: Enabled. ON: Disabled.	Read-only	
UM Read Protection Release Enable Flag	A99.12	Indicates when UM read protection cannot be released because an incorrect password was input five times consecutively. OFF: Protection can be released ON: Protection cannot be released	Read-only	
Task Read Protection Release Enable Flag	A99.13	Indicates when task read protection cannot be released because an incorrect password was input five times consecutively. OFF: Protection can be released ON: Protection cannot be released	Read-only	

Communications

Networks

Network Communications Information

Name	Address	Description	Access	Updated
Communications Port Enabled Flags	A202.00 to A202.07	ON when a network instruction or background execution can be executed with the corresponding port number. Bits 00 to 07 correspond to communications ports 0 to 7.	Read-only	
Communications Port Completion Codes	A203 to A210	These words contain the completion codes for the corresponding port numbers when network instructions have been executed. Words A203 to A210 correspond to communications ports 0 to 7.	Read-only	
Communications Port Error Flags	A219.00 to A219.07	ON when an error occurred during execution of a network instruction. OFF when a normal response is returned. Bits 00 to 07 correspond to communications ports 0 to 7.	Read-only	

Information When Automatically Allocating Communications Ports

Name	Address	Description	Access	Updated
Network Communications Port Allocation Enabled Flag	A202.15	ON when there is a communications port available for automatic allocation. **Note** Use this flag to confirm whether a communications port is available for automatic allocation before executing communications instructions when using 9 or more communications instructions simultaneously.	Read-only	
First Cycle Flags after Network Communications Finished	A214.00 to A214.07	Each flag will turn ON for just one cycle after communications have been completed. Bits 00 to 07 correspond to ports 0 to 7. Use the Used Communications Port Number stored in A218 to determine which flag to access. **Note** These flags are not effective until the next cycle after the communications instruction is executed. Delay accessing them for at least one cycle.	Read-only	
First Cycle Flags after Network Communications Error	A215.00 to A215.07	Each flag will turn ON for just one cycle after a communications error occurs. Bits 00 to 07 correspond to ports 0 to 7. Use the Used Communications Port Number stored in A218 to determine which flag to access. Determine the cause of the error according to the Communications Port Completion Codes stored in A203 to A210. **Note** These flags are not effective until the next cycle after the communications instruction is executed. Delay accessing them for at least one cycle.	Read-only	
Network Communications Completion Code Storage Address	A216 to A217	The completion code for a communications instruction is automatically stored at the address with the I/O memory address given in these words. Place this address into an index register and use indirect addressing through the index register to read the communications completion code.	Read-only	
Used Communications Port Numbers	A218	Stores the communications port numbers used when a communications instruction is executed using automatic communication port allocations. 0000 to 0007 hex: Communications port 0 to 7	Read-only	

Serial Port 1 Information (CP1L CPU Units with M CPU Type)

Name	Address	Description	Access	Updated
Peripheral Port Communications Error Flag	A392.12	ON when a communications error has occurred at the serial port 1.	Read-only	
Peripheral Port Restart Bit	A526.01	Turn this bit ON to restart the serial port 1.	Read/write	
Peripheral Port Settings Change Bit	A619.01	ON while the serial port 1's communications settings are being changed.	Read/write	
Peripheral Port Error Flags	A528.08 to A528.15	These flags indicate what kind of error has occurred at the serial port 1.	Read/write	
Serial Port 1 Send Ready Flag (No-protocol Mode)	A392.13	ON when the serial port 1 is able to send data in no-protocol mode.	Read-only	

Name	Address	Description	Access	Updated
Serial Port 1 Reception Completed Flag (No-protocol Mode)	A392.14	ON when the serial port 1 has completed the reception in no-protocol mode.	Read-only	
Serial Port 1 Reception Overflow Flag (No-protocol Mode)	A392.15	ON when a data overflow occurred during reception through the serial port 1 in no-protocol mode.	Read-only	
Peripheral Port PT Communications Flags	A394.00 to A394.07	The corresponding bit will be ON when the serial port 1 is communicating with a PT in NT link mode. Bits 0 to 7 correspond to units 0 to 7.	Read-only	
Peripheral Port PT Priority Registered Flags	A394.08 to A394.15	The corresponding bit will be ON for the PT that has priority when the serial port 1 is communicating in NT link mode.	Read-only	
Serial Port 1 Reception Counter (No-protocol Mode)	A394.00 to A394.15	Indicates (in binary) the number of bytes of data received when serial port 1 is in no-protocol mode.	Read-only	

Serial Port 1 Information (CP1L CPU Units with L CPU Type)

Name	Address	Description	Access	Updated
Serial Port 1 Communications Error Flag	A392.04	ON when a communications error has occurred at the serial port 1. **Note** Not supported for 1:N NT Link Mode.	Read-only	
Serial Port 1 Restart Bit	A526.00	Turn this bit ON to restart the serial port 1.	Read/write	
Serial Port 1 Settings Change Bit	A619.02	ON while the serial port 1's communications settings are being changed.	Read/write	
Serial Port 1 Error Flags	A528.00 to A528.07	These flags indicate what kind of error has occurred at the serial port 1.	Read/write	
Serial Port 1 Send Ready Flag (No-protocol mode)	A392.05	ON when the serial port 1 is able to send data in no-protocol mode.	Read-only	
Serial Port 1 Reception Completed Flag (No-protocol Mode)	A392.06	ON when the serial port 1 has completed the reception in no-protocol mode.	Read-only	
Serial Port 1 Reception Overflow Flag (No-protocol mode)	A392.07	ON when a data overflow occurred during reception through the serial port 1 in no-protocol mode.	Read-only	
Serial Port 1 PT Communications Flags	A393.00 to A393.07	The corresponding bit will be ON when the serial port 1 is communicating with a PT in NT link mode. Bits 0 to 7 correspond to units 0 to 7.	Read-only	
Serial Port 1 PT Priority Registered Flags	A393.08 to A393.15	The corresponding bit will be ON for the PT that has priority when the serial port 1 is communicating in NT link mode. Bits 0 to 7 correspond to units 0 to 7.	Read-only	
Serial Port 1 Reception Counter (No-protocol Mode)	A393.00 to A393.15	Indicates (in binary) the number of bytes of data received when serial port 1 is in no-protocol mode.	Read-only	

Serial Port 2 Information (CP1L CPU Units with M CPU Type)

Name	Address	Description	Access	Updated
Serial Port 2 Communications Error Flag	A392.04	ON when a communications error has occurred at the serial port 2.	Read-only	
Serial Port 2 Restart Bit	A526.00	Turn this bit ON to restart the serial port 2.	Read/write	
Serial Port 2 Settings Change Bit	A619.02	ON while the serial port 2's communications settings are being changed.	Read/write	
Serial Port 2 Error Flags	A528.00 to A528.07	These flags indicate what kind of error has occurred at the serial port 2.	Read/write	
Serial Port 2 Send Ready Flag (No-protocol mode)	A392.05	ON when the serial port 2 is able to send data in no-protocol mode.	Read-only	
Serial Port 2 Reception Completed Flag (No-protocol Mode)	A392.06	ON when the serial port 2 has completed the reception in no-protocol mode.	Read-only	
Serial Port 2 Reception Overflow Flag (No-protocol mode)	A392.07	ON when a data overflow occurred during reception through the serial port 2 in no-protocol mode.	Read-only	

Name	Address	Description	Access	Updated
Serial Port 2 PT Communications Flags	A393.00 to A393.07	The corresponding bit will be ON when the serial port 2 is communicating with a PT in NT link mode. Bits 0 to 7 correspond to units 0 to 7.	Read-only	
RS-232C Port PT Priority Registered Flags	A393.08 to A393.15	The corresponding bit will be ON for the PT that has priority when the serial port 2 is communicating in NT link mode.	Read-only	
RS-232C Port Reception Counter (No-protocol Mode)	A393.00 to A393.15	Indicates (in binary) the number of bytes of data received when serial port 2 is in no-protocol mode.	Read-only	

Modbus-RTU Easy Master Information (CP1L CPU Units with M CPU Type)

Name	Address	Description	Access	Updated
Serial Port 1 Modbus-RTU Master Execution Bit	A641.00	Turn ON this bit to send a command and receive a response for serial port 1 using the Modbus-RTU easy master function. This bit will be turned OFF automatically by the system when communications have been completed. Turned ON: Execution started ON: Execution in progress. OFF: Not executed or execution completed.	Read-only	
Serial Port 1 Modbus-RTU Master Execution Normal Flag	A641.01	ON when one command has been sent and the response received for serial port 1 using the Modbus-RTU easy master function. ON: Execution normal. OFF: Execution error or still in progress.	Read-only	
Serial Port 1 Modbus-RTU Master Execution Error Flag	A641.02	ON when an error has occurred in communications for serial port 1 using the Modbus-RTU easy master function. The error code is output to D32352 in the DM fixed allocation words for Modbus-RTU Easy Master. ON: Execution error. OFF: Execution normal or still in progress.	Read-only	
Serial Port 2 Modbus-RTU Master Execution Bit	A640.00	Turn ON this bit to send a command and receive a response for serial port 2 using the Modbus-RTU easy master function. This bit will be turned OFF automatically by the system when communications have been completed. Turned ON: Execution started ON: Execution in progress. OFF: Not executed or execution completed.	Read-only	
Serial Port 2 Modbus-RTU Master Execution Normal Flag	A640.01	ON when one command has been sent and the response received for serial port 2 using the Modbus-RTU easy master function. ON: Execution normal. OFF: Execution error or still in progress.	Read-only	
Serial Port 2 Modbus-RTU Master Execution Error Flag	A640.02	ON when an error has occurred in communications for serial port 2 using the Modbus-RTU easy master function. The error code is output to D32252 in the DM fixed allocation words for Modbus-RTU Easy Master. ON: Execution error. OFF: Execution normal or still in progress.	Read-only	

Note DM fixed allocation words for Modbus-RTU Easy Master for serial port 1: D32200 to D32299
DM fixed allocation words for Modbus-RTU Easy Master for serial port 2: D32300 to D32399

Modbus-RTU Easy Master Information (CP1L CPU Units with L CPU Type)

Name	Address	Description	Access	Updated
Serial Port 1 Modbus-RTU Master Execution Bit	A640.00	Turn ON this bit to send a command and receive a response for serial port 2 using the Modbus-RTU easy master function. This bit will be turned OFF automatically by the system when communications have been completed. Turned ON: Execution started ON: Execution in progress. OFF: Not executed or execution completed.	Read-only	
Serial Port 1 Modbus-RTU Master Execution Normal Flag	A640.01	ON when one command has been sent and the response received for serial port 2 using the Modbus-RTU easy master function. ON: Execution normal. OFF: Execution error or still in progress.	Read-only	
Serial Port 1 Modbus-RTU Master Execution Error Flag	A640.02	ON when an error has occurred in communications for serial port 2 using the Modbus-RTU easy master function. The error code is output to D32252 in the DM fixed allocation words for Modbus-RTU Easy Master. ON: Execution error. OFF: Execution normal or still in progress.	Read-only	

Note DM fixed allocation words for Modbus-RTU Easy Master for serial port 2: D32300 to D32399

Instruction-related Information

Name	Address	Description	Access	Updated
Step Flag	A200.12	ON for one cycle when step execution is started with STEP(008).	Read-only	
Macro Area Input Words	A600 to A603	Before the subroutine specified in MCRO(099) is executed, the source words for the subroutine are transferred to A600 through A603 (input parameter words).	Read/write	
Macro Area Output Words	A604 to A607	After the subroutine specified in MCRO(099) has been executed, the results of the subroutine are transferred from A604 through A607 to the specified destination words (output parameter words).	Read/write	

Function Block Information

Function Block Memory Information

Name	Address	Description	Access	Updated
FB Program Data Flag	A345.00	Turns ON if the FB program memory contains FB program data. OFF: No data ON: Data present	Read-only	

OMRON FB Library Information

Name	Address	Description	Access	Updated
FB Communications Instruction Response Required	A580.15	0: Not required 1: Required	Read-only	
FB Communications Instruction Port No.	A580.08 to A580.11	0 to 7 hex: Communications port No. 0 to 7 F hex: Automatic allocation	Read-only	
FB Communications Instruction Retries	A580.00 to A580.03	Automatically stores the number of retries in the FB communications instruction settings specified in the PLC Setup.	Read-only	
FB Communications Instruction Response Monitoring Time	A581	Automatically stores the FB communications instruction response monitoring time set in the PLC Setup. 0001 to FFFF hex (Unit: 0.1 s; Range: 0.1 to 6553.5) 0000 hex: 2 s	Read-only	
FB DeviceNet Communications Instruction Response Monitoring Time	A582	Automatically stores the FB DeviceNet communications instruction response monitoring time set in the PLC Setup. 0001 to FFFF hex (Unit: 0.1 s; Range: 0.1 to 6553.5) 0000 hex: 2 s	Read-only	

Note These Auxiliary Area bits/words are not to be written by the user. The number of resends and response monitoring time must be set by the user in the FB communications instructions settings in the PLC Setup, particularly when using function blocks from the OMRON FB Library to execute FINS messages or DeviceNet explicit messages communications. The values set in the Settings for

OMRON FB Library in the PLC Setup will be automatically stored in the related Auxiliary Area words A580 to A582 and used by the function blocks from the OMRON FB Library.

Ethernet Option Board Flag

System Settings Reset

Name	Address	Description	Access	Updated
Ethernet Option Board Reset Flag	A525.00 to A525.01	If the flag turns ON, the Ethernet Option Board mounted on the corresponding option board slot will reset the system settings to default values.	Read/write	

Unit Restart

Name	Address	Description	Access	Updated
Ethernet Option Board Restart Flag	A525.08 to A525.09	If the flag turns ON, the Ethernet Option Board mounted on the corresponding option board slot will be restarted.	Read/write	

Appendix D
Auxiliary Area Allocations by Address

Read-only Area (Set by System)

Address		Name	Function	Settings	Status after mode change	Status at start-up	Write timing	Related flags, settings
Words	Bits							
A0	---	10-ms Incrementing Free Running Timer	This word contains the system timer used after the power is turned ON. A value of 0000 hex is set when the power is turned ON and this value is automatically incremented by 1 every 10 ms. The value returns to 0000 hex after reaching FFFF hex (655,350 ms), and then continues to be automatically incremented by 1 every 10 ms. **Note:** The timer will continue to be incremented when the operating mode is switched to RUN mode. Example: The interval can be counted between processing A and processing B without requiring timer instructions. This is achieved by calculating the difference between the value in A0 for processing A and the value in A0 for processing B. The interval is counted in 10 ms units.	---	Retained	Cleared	Every 10 ms after power is turned ON	---
A1	---	100-ms Incrementing Free Running Timer	This word contains the system timer used after the power is turned ON. A value of 0000 hex is set when the power is turned ON and this value is automatically incremented by 1 every 100 ms. The value returns to 0000 hex after reaching FFFF hex (6,553,500 ms), and then continues to be automatically incremented by 1 every 100 ms. **Note:** The timer will continue to be incremented when the operating mode is switched to RUN mode. Example: The interval can be counted between processing A and processing B without requiring timer instructions. This is achieved by calculating the difference between the value in A0 for processing A and the value in A0 for processing B. The interval is counted in 100 ms units.	---	Retained	Cleared	Every 100 ms after power is turned ON	---
A20 and A21	---	Present Value of Unsigned Output Value 0	These words contain the present value of the unsigned output value (output value = present value of error counter × error counter cycle (s) × gain) for inverter positioning 0. Data range: 0000 0000 to 8000 0000 hex (0 to 2,147,483,648) The maximum and minimum output values set for inverter positioning 0 in the PLC Setup are applied. A21 contains the leftmost 4 digits and A20 contains the rightmost 4 digits.	---	---	Cleared	Every error counter 0 cycle	---

Address		Name	Function	Settings	Status after mode change	Status at start-up	Write timing	Related flags, settings
Words	Bits							
A22	---	Error Counter 0 Present Value, Signed	This word contains the present value of the error counter for inverter positioning 0. Data range: 8000 to 7FFF hex (−32,768 to 32,767) (signed)	---	---	Cleared	Every error counter 0 cycle	---
A23	---	Inverter Frequency 0 Command Value	This word contains the automatically calculated frequency command value for the inverter for inverter positioning 0. Data range: 0000 to FFFF hex (0.00 to 655.35 Hz) (0.01-Hz increments, unsigned) Set the Power Supply Frequency for One Motor Revolution per Second, Number of Encoder Pulses for One Motor Revolution, and Error Counter Cycle for inverter positioning 0 in the PLC Setup before using this value.	---	---	Cleared	Every error counter 0 cycle	---
A24 and A25	---	Present Value of Signed Output Value 0	These words contain the present value of the signed output value (output value = present value of error counter × error counter cycle (s) × gain) for inverter positioning 0. Data range: 8000 0000 to 7FFF FFFF hex (−214,748,348 to 214,748,347) (signed) The maximum and minimum output values set for inverter positioning 0 in the PLC Setup are applied. A25 contains the leftmost 4 digits and A24 contains the rightmost 4 digits.	---	---	Cleared	Every error counter 0 cycle	---
A26	00	Operation Command Flag 0	This flag turns ON during an operation command for inverter positioning 0.	ON: Operation command executed. OFF: Stop command executed.	---	Cleared	When inverter positioning 0 is started	---
	01	Forward Operation Command Flag 0	This flag turns ON during a forward operation command for inverter positioning 0.	ON: Forward command in progress OFF: Reverse command in progress or stopped	---	Cleared	When present value of error counter 0 is positive	---
	02	Reverse Operation Command Flag 0	This flag turns ON during a reverse operation command for inverter positioning 0.	ON: Reverse command in progress OFF: Forward command in progress or stopped	---	Cleared	When present value of error counter 0 is negative	---
	03	In-position Flag 0	This flag turns ON when inverter positioning 0 is in position.	ON: In position OFF: Not in position	---	Cleared	When pulse output to error counter 0 is stopped and the present value of error counter 0 is within the in-position range	---

Address		Name	Function	Settings	Status after mode change	Status at start-up	Write timing	Related flags, settings
Words	Bits							
A26	04	Error Counter Error Flag 0	This flag turns ON when an error occurs in the error counter for inverter positioning 0.	ON: Error counter error OFF: No error	---	Cleared	When pulse output to error counter is stopped and absolute value of error counter present value is greater than or equal to error counter error detection value	---
	05	Error Counter Pulse Output Flag 0	This flag is ON while pulses are being output to the output counter for inverter positioning 0.	ON: Pulses being output OFF: Pulse output stopped	---	Cleared	When pulse output to error counter 0 is started	---
	06	Error Counter Pulse Output Acceleration/ Deceleration Flag 0	This flag is ON while pulse output to the output counter for inverter positioning 0 is accelerating or decelerating.	ON: Pulse output to the error counter is accelerating or decelerating (i.e., the frequency is changing) OFF: Pulse output to the error counter is constant	---	Cleared	When pulse output frequency to error counter is changed by ACC or PLS2 instruction	---
	07	Error Counter Alarm Flag 0	This flag turns ON when an alarm occurs in the error counter for inverter positioning 0.	ON: Error counter alarm OFF: No error counter alarm	---	Cleared	When pulse output to error counter is stopped and absolute value of error counter present value is greater than or equal to error counter alarm detection value	---
	15	Inverter Positioning Output Value Sign Flag 0	This flag is ON when the inverter positioning 0 output value is positive and is OFF when it is negative.	ON: Positive value OFF: Negative value	---	Cleared	When signed output value is between 0000 0000 and 7FFF FFFF hex	---
A28 and A29	---	Present Value of Pulse Output to Inverter 0, Relative Value	These words contain the relative value of the internal pulse output when pulses are being output to the error counter for inverter positioning 0. Data range: 8000 0000 to 7FFF FFFF hex (–2,147,483,648 to 2,147,483,647)	---	---	Cleared	Every error counter 0 cycle	---

Address		Name	Function	Settings	Status after mode change	Status at start-up	Write timing	Related flags, settings
Words	Bits							
A30 and A31	---	Present Value of Unsigned Output Value 1	These words contain the present value of the unsigned output value (output value = present value of error counter × error counter cycle (s) × gain) for inverter positioning 1. Data range: 0000 0000 to 8000 0000 hex (0 to 2,147,483,648) The maximum and minimum output values set for inverter positioning 1 in the PLC Setup are applied. A30 contains the leftmost 4 digits and A31 contains the rightmost 4 digits.	---	---	Cleared	Every error counter 1 cycle	---
A32	---	Error Counter 1 Present Value, Signed	This word contains the present value of the error counter for inverter positioning 1. Data range: 8000 to 7FFF hex (−32,768 to 32,767) (signed)	---	---	Cleared	Every error counter 1 cycle	---
A33	---	Inverter Frequency Command Value 1	This word contains the automatically calculated frequency command value for the inverter for inverter positioning 1. Data range: 0000 to FFFF hex (0.00 to 655.35 Hz) (0.01-Hz increments, unsigned) Set the Power Supply Frequency for One Motor Revolution per Second, Number of Encoder Pulses for One Motor Revolution, and Error Counter Cycle in the PLC Setup before using this value.	---	---	Cleared	Every error counter 1 cycle	---
A34 and A35	---	Present Value of Signed Output Value 1	These words contain the present value of the signed output value (output value = present value of error counter × error counter cycle (s) × gain) for inverter positioning 1. Data range: 8000 0000 to 7FFF FFFF hex (−214,748,348 to 214,748,347) (signed) The maximum and minimum output values set for inverter positioning 1 in the PLC Setup are applied. A34 contains the leftmost 4 digits and A35 contains the rightmost 4 digits.	---	---	Cleared	Every error counter 1 cycle	---

Address		Name	Function	Settings	Status after mode change	Status at start-up	Write timing	Related flags, settings
Words	Bits							
A36	00	Operation Command Flag 1	This flag turns ON during an operation command for inverter positioning 1.	ON: Operation command executed. OFF: Stop command executed.	---	Cleared	When inverter positioning 1 is started	---
	01	Forward Operation Command Flag 1	This flag turns ON during a forward operation command for inverter positioning 1.	ON: Forward command in progress OFF: Reverse command in progress or stopped	---	Cleared	When present value of error counter 1 is positive	---
	02	Reverse Operation Command Flag 1	This flag turns ON during a reverse operation command for inverter positioning 1.	ON: Reverse command in progress OFF: Forward command in progress or stopped	---	Cleared	When present value of error counter 1 is negative	---
	03	In-position Flag 1	This flag turns ON when inverter positioning 1 is in position.	ON: In position OFF: Not in position	---	Cleared	When pulse output to error counter 1 is stopped and the present value of error counter 1 is within the in-position range	---
	04	Error Counter Error Flag 1	This flag turns ON when an error occurs in the error counter for inverter positioning 1.	ON: Error counter error OFF: No error	---	Cleared	When pulse output to error counter is stopped and absolute value of error counter present value is greater than or equal to error counter error detection value	---
	05	Error Counter Pulse Output Flag 1	This flag is ON while pulses are being output to the output counter for inverter positioning 1.	ON: Pulses being output OFF: Pulse output stopped	---	Cleared	When pulse output to error counter 1 is started	---
	06	Error Counter Pulse Output Acceleration/ Deceleration Flag 1	This flag is ON while pulse output to the output counter for inverter positioning 1 is accelerating or decelerating.	ON: Pulse output to the error counter is accelerating or decelerating (i.e., the frequency is changing) OFF: Pulse output to the error counter is constant	---	Cleared	When pulse output frequency to error counter is changed by ACC or PLS2 instruction	---

Address		Name	Function	Settings	Status after mode change	Status at start-up	Write timing	Related flags, settings
Words	Bits							
A36	07	Error Counter Alarm Flag 1	This flag turns ON when an alarm occurs in the error counter for inverter positioning 1.	ON: Error counter alarm OFF: No error counter alarm	---	Cleared	When pulse output to error counter is stopped and absolute value of error counter present value is greater than or equal to error counter alarm detection value	---
	15	Inverter Positioning Output Value Sign Flag 1	This flag is ON when the inverter positioning 1 output value is positive and is OFF when it is negative.	ON: Positive value OFF: Negative value	---	Cleared	When signed output value is between FFFF FFFF and 8000 0000	---
A38 and A39		Present Value of Pulse Output to Inverter 1, Relative Value	These words contain the relative value of the internal pulse output when pulses are being output to the error counter for inverter positioning 1. Data range: 8000 0000 to 7FFF FFFF hex (–2,147,483,648 to 2,147,483,647) A38 contains the leftmost 4 digits and A39 contains the rightmost 4 digits.	---	---	Cleared	Every error counter 1 cycle	---
A90 to A93	All	User Program Date	These words contain in BCD the date and time that the user program was last overwritten. A90.00 to A90.07: Seconds (00 to 59) A90.08 to A90.15: Minutes (00 to 59) A91.00 to A91.07: Hour (00 to 23) A91.08 to A91.15: Day of month (01 to 31) A92.00 to A92.07: Month (01 to 12) A92.08 to A92.15: Year (00 to 99) A93.00 to A93.07: Day of the week (00: Sunday, 01: Monday, 02: Tuesday, 03: Wednesday, 04: Thursday, 05: Friday, 06: Saturday)	---	Retained	Retained	---	---
A94 to A97	All	Parameter Date	These words contain in BCD the date and time that the parameters were last overwritten. The format is the same as above.	---	Retained	Retained	---	---

Address		Name	Function	Settings	Status after mode change	Status at start-up	Write timing	Related flags, settings
Words	**Bits**							
A99	A99.00	UM Read Protection Status	Indicates whether the entire user program in the PLC is read-protected.	OFF: UM not read-protected. ON: UM read-protected.	Retained	Retained	When protection is set or cleared	---
	A99.01	Task Read Protection Status	Indicates whether read protection is set for individual tasks.	OFF: Tasks not read-protected. ON: Tasks read-protected.	Retained	Retained	When protection is set or cleared	---
	A99.02	Program Write Protection Status when Read Protection Is Set	Indicates whether the program is write-protected.	OFF: Write-enabled. ON: Write-protected.	Retained	Retained	When protection is set or cleared	---
	A99.03	Enable/Disable Status for Backing Up the Program to a Memory Cassette	Indicates whether creating a backup program file (.OBJ) is enabled or disabled.	OFF: Enabled. ON: Disabled.	Retained	Retained	When protection is set or cleared	---
	A99.12	UM Read Protection Release Enable Flag	Indicates when UM read protection cannot be released because an incorrect password was input five times consecutively.	OFF: Protection can be released ON: Protection cannot be released	Retained	Retained	When wrong pass word is input for the fifth time, when memory is cleared, and two hours after releasing protection is disabled	---
	A99.13	Task Read Protection Release Enable Flag	Indicates when task read protection cannot be released because an incorrect password was input five times consecutively.	OFF: Protection can be released ON: Protection cannot be released	Retained	Retained		---
	A99.14	IR/DR Operation between Tasks Retained	ON when index and data registers are shared between all tasks. OFF when separate index and data registers are being used in each task.	OFF: Independent ON: Shared (default)	Retained	Retained		---
	A99.15	Timer/Counter PV Refresh Mode Flag	Indicates whether the CPU Unit is operating in BCD mode or binary mode.	OFF: BCD mode ON: Binary mode	Retained	Retained		---

Address		Name	Function	Settings	Status after mode change	Status at start-up	Write timing	Related flags, settings
Words	Bits							
A100 to A199	All	Error Log Area	When an error has occurred, the error code, error contents, and error's time and date are stored in the Error Log Area. Information on the 20 most recent errors can be stored. Each error record occupies 5 words; the function of these 5 words is as follows: 1) Error code (bits 0 to 15) 2) Error contents (bits 0 to 15) 3) Minutes (bits 8 to 15), Seconds (bits 0 to 7) 4) Day of month (bits 8 to 15), Hours (bits 0 to 7) 5) Year (bits 8 to 15), Month (bits 0 to 7) Errors generated by FAL(006) and FALS(007) will also be stored in this Error Log. The Error Log Area can be reset from the CX-Programmer. If the Error Log Area is full (20 records) and another error occurs, the oldest record in A100 to A104 will be cleared, the other 19 records are shifted down, and the new record is stored in A195 to A199.	Error code Error contents: Address of Aux. Area word with details or 0000. Seconds: 00 to 59, BCD Minutes: 00 to 59, BCD Hours: 00 to 23, BCD Day of month: 01 to 31, BCD Month: 01 to 12, BCD Year: 00 to 99, BCD	Retained	Retained	Refreshed when error occurs.	A500.14 A300 A400
A200	A200.11	First Cycle Flag	ON for one cycle after PLC operation begins (after the mode is switched from PROGRAM to RUN or MONITOR, for example).	ON for the first cycle	---	---	---	---
	A200.12	Step Flag	ON for one cycle when step execution is started with STEP(008). This flag can be used for initialization processing at the beginning of a step.	ON for the first cycle after execution of STEP(008).	Cleared	---	---	---
	A200.14	Task Started Flag	When a task switches from WAIT or INI to RUN status, this flag will be turned ON within the task for one cycle only. The only difference between this flag and A200.15 is that this flag also turns ON when the task switches from WAIT to RUN status.	ON: ON for first cycle (including transitions from WAIT and IN) OFF: Other	Cleared	Cleared	---	---
	A20015	First Task Startup Flag	ON when a task is executed for the first time. This flag can be used to check whether the current task is being executed for the first time so that initialization processing can be performed if necessary.	ON: First execution OFF: Not executable for the first time or not being executed.	Cleared	---	---	---
A201	A201.10	Online Editing Wait Flag	ON when an online editing process is waiting. (If another online editing command is received while waiting, the other command won't be recorded and an error will occur.)	ON: Waiting for online editing OFF: Not waiting for online editing	Cleared	Cleared	---	A527
	A201.11	Online Editing Flag	ON when an online editing process is being executed.	ON: Online editing in progress OFF: Online editing not in progress	Cleared	Cleared	---	A527

Address		Name	Function	Settings	Status after mode change	Status at start-up	Write timing	Related flags, settings
Words	**Bits**							
A202	A202.00 to A202.07	Communications Port Enabled Flags	ON when a network instruction (SEND, RECV, CMND, or PMCR) can be executed with the corresponding port number. Bits 00 to 07 correspond to communications ports 0 to 7. When two or more network instructions are programmed with the same port number, use the corresponding flag as an execution condition to prevent the instructions from being executed simultaneously. (The flag for a given port is turned OFF while a network instruction with that port number is being executed.)	ON: Network instruction is not being executed OFF: Network instruction is being executed (port busy)	Cleared	---	---	---
	A202.15	Network Communications Port Allocation Enabled Flag	ON when there is a communications port available for automatic allocation. **Note** Use this flag to confirm whether a communications port is available for automatic allocation before executing communications instructions when using 9 or more communications instructions simultaneously.	ON: Port available OFF: Port not available	Cleared	---	---	---
A203 to A210	All	Communications Port Completion Codes	These words contain the completion codes for the corresponding port numbers when network instructions (SEND, RECV, CMND, or PMCR) have been executed. (The corresponding word will be cleared when background execution has been completed.) Words A203 to A210 correspond to communications ports 0 to 7.	Non-zero: Error code 0000: Normal condition	Retained	---	---	---
A214	A214.00 to A214.07	First Cycle Flags after Network Communications Finished	Each flag will turn ON for just one cycle after communications have been completed. Bits 00 to 07 correspond to ports 0 to 7. Use the Used Communications Port Number stored in A218 to determine which flag to access. **Note** These flags are not effective until the next cycle after the communications instruction is executed. Delay accessing them for at least one cycle.	ON: First cycle after communications finish only OFF: Other status			---	---
A215	A215.00 to A215.07	First Cycle Flags after Network Communications Error	Each flag will turn ON for just one cycle after a communications error occurs. Bits 00 to 07 correspond to ports 0 to 7. Use the Used Communications Port Number stored in A218 to determine which flag to access. Determine the cause of the error according to the Communications Port Completion Codes stored in A203 to A210. **Note** These flags are not effective until the next cycle after the communications instruction is executed. Delay accessing them for at least one cycle.	ON: First cycle after communications error only OFF: Other status			---	---
A216 to A217	All	Network Communications Completion Code Storage Address	The completion code for a communications instruction is automatically stored at the address with the I/O memory address given in these words. Place this address into an index register and use indirect addressing through the index register to read the communications completion code.	I/O memory address for the network communications completion code storage			---	---

Address		Name	Function	Settings	Status after mode change	Status at start-up	Write timing	Related flags, settings
Words	**Bits**							
A218	All	Used Communications Port Numbers	Stores the communications port numbers used when a communications instruction is executed using automatic communication port allocations.	0000 to 0007 hex: Communications port 0 to 7			---	---
A219	A219.00 to A219.07	Communications Port Error Flags	ON when an error occurred during execution of a network instruction (SEND, RECV, CMND, or PMCR). Bits 00 to 07 correspond to communications ports 0 to 7.	ON: Error occurred OFF: Normal condition	Retained	---	---	---
A262 and A263	All	Maximum Cycle Time	These words contain the maximum cycle time since the start of PLC operation. The cycle time is recorded in 8-digit hexadecimal with the leftmost 4 digits in A263 and the rightmost 4 digits in A262.	0 to FFFFFFFF: 0 to 429,496,729.5 ms (0.1-ms units)	---	---	---	---
A264 and A265	All	Present Cycle Time	These words contain the present cycle time in 8-digit hexadecimal with the leftmost 4 digits in A265 and the rightmost 4 digits in A264.	0 to FFFFFFFF: 0 to 429,496,729.5 ms	---	---	---	---
A270 to A271	All	High-speed Counter 0 PV	Contains the PV of high-speed counter 0. A271 contains the leftmost 4 digits and A270 contains the rightmost 4 digits. The PV is cleared when operation starts.	---	---	Cleared	Refreshed each cycle during oversee process. Refreshed when PRV(881) instruction is executed.	---
A272 to A273	All	High-speed Counter 1 PV	Contains the PV of high-speed counter 1. A273 contains the leftmost 4 digits and A272 contains the rightmost 4 digits. The PV is cleared when operation starts.	---	---	Cleared	Refreshed each cycle during oversee process. Refreshed when PRV(881) instruction is executed.	---

Address		Name	Function	Settings	Status after mode change	Status at start-up	Write timing	Related flags, settings
Words	**Bits**							
A274	A274.00	High-speed Counter 0 Range 1 Comparison Condition Met Flag	These flags indicate whether the PV is within the specified ranges when high-speed counter 0 is being operated in range-comparison mode. Cleared at beginning of operation. Cleared when range comparison table is registered. OFF: PV not in range ON: PV in range	---	---	Cleared	Refreshed each cycle during oversee process. Refreshed when PRV(881) instruction is executed.	---
	A274.01	High-speed Counter 0 Range 2 Comparison Condition Met Flag						
	A274.02	High-speed Counter 0 Range 3 Comparison Condition Met Flag						
	A274.03	High-speed Counter 0 Range 4 Comparison Condition Met Flag						
	A274.04	High-speed Counter 0 Range 5 Comparison Condition Met Flag						
	A274.05	High-speed Counter 0 Range 6 Comparison Condition Met Flag						
	A274.06	High-speed Counter 0 Range 7 Comparison Condition Met Flag						
	A274.07	High-speed Counter 0 Range 8 Comparison Condition Met Flag						
A274	A274.08	High-speed Counter 0 Comparison In-progress Flag	This flag indicates whether a comparison operation is being executed for high-speed counter 0. Cleared at beginning of operation. OFF: Stopped. ON: Being executed.	---	---	Cleared	Refreshed when comparison operation starts or stops.	---
	A274.09	High-speed Counter 0 Overflow/ Underflow Flag	This flag indicates when an overflow or underflow has occurred in the high-speed counter 0 PV. (Used with the linear mode counting range only.) Cleared when operation starts. Cleared when PV is changed. OFF: Normal ON: Overflow or underflow	---	---	Cleared	Refreshed when an overflow or underflow occurs.	---
	A274.10	High-speed Counter 0 Count Direction	This flag indicates whether the high-speed counter is currently being incremented or decremented. The counter PV for the current cycle is compared with the PLC in last cycle to determine the direction. OFF: Decrementing ON: Incrementing	---	---	Cleared	Setting used for high-speed counter, valid during counter operation.	Read only

Address		Name	Function	Settings	Status after mode change	Status at start-up	Write timing	Related flags, settings
Words	**Bits**							
A275	A275.00	High-speed Counter 1 Range 1 Comparison Condition Met Flag	These flags indicate whether the PV is within the specified ranges when high-speed counter 1 is being operated in range-comparison mode. Cleared when operation starts. Cleared when range comparison table is registered. OFF: PV not in range ON: PV in range	---	---	Cleared	Refreshed each cycle during overseeing process. Refreshed when PRV(881) instruction is executed for the corresponding counter.	---
	A275.01	High-speed Counter 1 Range 2 Comparison Condition Met Flag						
	A275.02	High-speed Counter 1 Range 3 Comparison Condition Met Flag						
	A275.03	High-speed Counter 1 Range 4 Comparison Condition Met Flag						
	A275.04	High-speed Counter 1 Range 5 Comparison Condition Met Flag						
	A275.05	High-speed Counter 1 Range 6 Comparison Condition Met Flag						
	A275.06	High-speed Counter 1 Range 7 Comparison Condition Met Flag						
	A275.07	High-speed Counter 1 Range 8 Comparison Condition Met Flag						
	A275.08	High-speed Counter 1 Comparison In-progress Flag	This flag indicates whether a comparison operation is being executed for high-speed counter 1. Cleared when operation starts. OFF: Stopped. ON: Being executed	---	---	Cleared	Refreshed when comparison operation starts or stops.	---
A275	A275.09	High-speed Counter 1 Overflow/ Underflow Flag	This flag indicates when an overflow or underflow has occurred in the high-speed counter 1 PV. (Used with the linear mode counting range only.) Cleared when operation starts. Cleared when the PV is changed. OFF: Normal ON: Overflow or underflow	---	---	Cleared	Refreshed when an overflow or underflow occurs.	---
	A275.10	High-speed Counter 1 Count Direction	This flag indicates whether the high-speed counter is currently being incremented or decremented. The counter PV for the current cycle is compared with the PC in last cycle to determine the direction. OFF: Decrementing ON: Incrementing	---	---	Cleared	Setting used for high-speed counter, valid during counter operation.	---

Address		Name	Function	Settings	Status after mode change	Status at start-up	Write timing	Related flags, settings
Words	**Bits**							
A276 and A277	All	Pulse Output 0 PV	Contain the number of pulses output from the corresponding pulse output port. PV range: 8000 0000 to 7FFF FFFF hex (-2,147,483,648 to 2,147,483,647) When pulses are being output in the CW direction, the PV is incremented by 1 for each pulse. When pulses are being output in the CCW direction, the PV is decremented by 1 for each pulse. PV after overflow: 7FFF FFFF hex PV after underflow: 8000 0000 hex A277 contains the leftmost 4 digits and A276 contains the rightmost 4 digits of the pulse output 0 PV. A279 contains the leftmost 4 digits and A278 contains the rightmost 4 digits of the pulse output 1 PV. Cleared when operation starts. **Note** If the coordinate system is relative coordinates (undefined origin), the PV will be cleared to 0 when a pulse output starts, i.e. when a pulse output instruction (SPED(885), ACC(888), or PLS2(887)) is executed.	---	---	Cleared	Refreshed each cycle during oversee process. Refreshed when the INI(880) instruction is executed (PV change).	---
A278 and A279	All	Pulse Output 1 PV				Cleared		---
A280	A280.00	Pulse Output 0 Accel/Decel Flag	This flag will be ON when pulses are being output from pulse output 0 according to an ACC(888) or PLS2(887) instruction and the output frequency is being changed in steps (accelerating or decelerating). Cleared when operation starts or stops. OFF: Constant speed ON: Accelerating or decelerating	---	---	Cleared	Refreshed each cycle during oversee process.	---
	A280.01	Pulse Output 0 Overflow/ Underflow Flag	This flag indicates when an overflow or underflow has occurred in the pulse output 0 PV. Cleared when operation starts. OFF: Normal ON: Overflow or underflow	---	---	Cleared	Cleared when the PV is changed by the INI(880) instruction. Refreshed when an overflow or underflow occurs.	---

Address		Name	Function	Settings	Status after mode change	Status at start-up	Write timing	Related flags, settings
Words	Bits							
A280	A280.02	Pulse Output 0 Output Amount Set Flag	ON when the number of output pulses for pulse output 0 has been set with the PULS(886) instruction. Cleared when operation starts or stops. OFF: No setting ON: Setting made	---	---	Cleared	Refreshed when the PULS(886) instruction is executed. Refreshed when pulse output stops.	---
	A280.03	Pulse Output 0 Output Completed Flag	ON when the number of output pulses set with the PULS(886) or PLS2(887) instruction has been output through pulse output 0. Cleared when operation starts or stops. OFF: Output not completed. ON: Output completed.	---	---	Cleared	Refreshed at the start or completion of pulse output in independent mode.	---
	A280.04	Pulse Output 0 Output In-progress Flag	ON when pulses are being output from pulse output 0. Cleared when operation starts or stops. OFF: Stopped ON: Outputting pulses.	---	---	Cleared	Refreshed when pulse output starts or stops.	---
	A280.05	Pulse Output 0 No-origin Flag	ON when the origin has not been determined for pulse output 0 and goes OFF when the origin has been determined. Turned ON when power is turned ON. Turned ON when operation starts. OFF: Origin established. ON: Origin not established.	---	---	Cleared	Refreshed each cycle during the overseeing processes.	---
	A280.06	Pulse Output 0 At-origin Flag	ON when the pulse output PV matches the origin (0). OFF: Not stopped at origin. ON: Stopped at origin.	---	---	Cleared	Refreshed each cycle during the overseeing processes.	---
	A280.07	Pulse Output 0 Output Stopped Error Flag	ON when an error occurred while outputting pulses in the pulse output 0 origin search function. The Pulse Output 0 Output Stop Error code will be written to A444. OFF: No error ON: Stop error occurred.	---	---	Cleared	Refreshed when origin search starts. Refreshed when a pulse output stop error occurs.	---
A281	A281.00	Pulse Output 1 Accel/Decel Flag	This flag will be ON when pulses are being output from pulse output 1 according to an ACC(888) or PLS2(887) instruction and the output frequency is being changed in steps (accelerating or decelerating). Cleared when operation starts or stops. OFF: Constant speed ON: Accelerating or decelerating	---	---	Cleared	Refreshed each cycle during oversee process.	---

Address		Name	Function	Settings	Status after mode change	Status at start-up	Write timing	Related flags, settings
Words	Bits							
A281	A281.01	Pulse Output 1 Overflow/ Underflow Flag	This flag indicates when an overflow or underflow has occurred in the pulse output 1 PV. Cleared when operation starts. OFF: Normal ON: Overflow or underflow	---	---	Cleared	Refreshed when the PV is changed by the INI(880) instruction. Refreshed when an overflow or underflow occurs.	---
	A281.02	Pulse Output 1 Output Amount Set Flag	ON when the number of output pulses for pulse output 1 has been set with the PULS(886) instruction. Cleared when operation starts or stops. OFF: No setting ON: Setting made	---	---	Cleared	Refreshed when the PULS(886) instruction is executed.	---
	A281.03	Pulse Output 1 Output Completed Flag	ON when the number of output pulses set with the PULS(886) or PLS2(887) instruction has been output through pulse output 1. Cleared when operation starts or stops. OFF: Output not completed. ON: Output completed.	---	---	Cleared	Refreshed when PULS(886) (886) instruction is executed. Refreshed at the start or completion of pulse output.	---
	A281.04	Pulse Output 1 Output In-progress Flag	ON when pulses are being output from pulse output 1. Cleared when operation starts or stops. OFF: Stopped ON: Outputting pulses.	---	---	Cleared	Refreshed when pulse output starts or stops.	---
	A281.05	Pulse Output 1 No-origin Flag	ON when the origin has not been determined for pulse output 1 and goes OFF when the origin has been determined. Turned ON when power is turned ON. Turned ON when operation starts. OFF: Origin established. ON: Origin not established.	---	---	Cleared	Refreshed each cycle during overseeing processes.	---
	A281.06	Pulse Output 1 At-origin Flag	ON when the pulse output PV matches the origin (0). OFF: Not stopped at origin. ON: Stopped at origin.	---	---	Cleared	Refreshed each cycle during overseeing processes.	---
	A281.07	Pulse Output 1 Output Stopped Error Flag	ON when an error occurred while outputting pulses in the pulse output 1 origin search function. The Pulse Output 1 Output Stop Error code will be written to A445. OFF: No error ON: Stop error occurred.	---	---	Cleared	Refreshed when origin search starts. Refreshed when pulse output stop error occurs.	---

Address		Name	Function	Settings	Status after mode change	Status at start-up	Write timing	Related flags, settings
Words	Bits							
A283	A283.00	PWM Output 0 Output In-progress Flag	ON when pulses are being output from PWM output 0. Cleared when operation starts or stops. OFF: Stopped ON: Outputting pulses.	---	---	Cleared	Refreshed when pulse output starts or stops.	---
	A283.08	PWM Output 1 Output In-progress Flag	ON when pulses are being output from PWM output 1. OFF: Stopped ON: Outputting pulses.	---	---	Cleared		---
A294	All	Task Number when Program Stopped	This word contains the task number of the task that was being executed when program execution was stopped because of a program error. (A298 and A299 contain the program address where program execution was stopped.)	Normal tasks: 0000 to 001F (task 0 to 31) Interrupt tasks: 8000 to 80FF (task 0 to 255)	Cleared	Cleared	When program error occurs.	A298/ A299
A295	A295.08	Instruction Processing Error Flag	This flag and the Error Flag (ER) will be turned ON when an instruction processing error has occurred and the PLC Setup has been set to stop operation for an instruction error. CPU Unit operation will stop and the ERR/ALM indicator will light when this flag goes ON. (The task number where the error occurred will be stored in A294 and the program address will be stored in A298 and A299.)	ON: Error Flag ON OFF: Error Flag OFF	Cleared	Cleared	When program error occurs.	A294, A298/ A299 PLC Setup (Operation when instruction error has occurred)
	A295.09	Indirect DM BCD Error Flag	This flag and the Access Error Flag (AER) will be turned ON when an indirect DM BCD error has occurred and the PLC Setup has been set to stop operation an indirect DM BCD error. (This error occurs when the content of an indirectly addressed DM word is not BCD although BCD mode has been selected.) CPU Unit operation will stop and the ERR/ALM indicator will light when this flag goes ON. (The task number where the error occurred will be stored in A294 and the program address will be stored in A298 and A299.)	ON: Not BCD OFF: Normal	Cleared	Cleared	When program error occurs.	A294, A298/ A299 PLC Setup (Operation when instruction error has occurred)
	A295.10	Illegal Access Error Flag	This flag and the Access Error Flag (AER) will be turned ON when an illegal access error has occurred and the PLC Setup has been set to stop operation an illegal access error. (This error occurs when a region of memory is accessed illegally.) CPU Unit operation will stop and the ERR/ALM indicator will light when this flag goes ON. The following operations are considered illegal access: 1) Reading/writing the system area 2) Indirect DM BCD error (in BCD mode) (The task number where the error occurred will be stored in A294 and the program address will be stored in A298 and A299.)	ON: Illegal access occurred OFF: Normal condition	Cleared	Cleared	When program error occurs.	A294, A298/ A299 PLC Setup (Operation when instruction error has occurred)

Address		Name	Function	Settings	Status after mode change	Status at start-up	Write timing	Related flags, settings
Words	Bits							
A295	A295.11	No END Error Flag	ON when there isn't an END(001) instruction in each program within a task. CPU Unit operation will stop and the ERR/ALM indicator will light when this flag goes ON. (The task number where the error occurred will be stored in A294 and the program address will be stored in A298 and A299.)	ON: No END OFF: Normal condition	Cleared	Cleared	---	A294, A298/ A299
	A295.12	Task Error Flag	ON when a task error has occurred. The following conditions generate a task error. There isn't even one regular task that is executable (started). There isn't a program allocated to the task. (The task number where the error occurred will be stored in A294 and the program address will be stored in A298 and A299.)	ON: Error OFF: Normal	Cleared	Cleared	---	A294, A298/ A299
	A295.13	Differentiation Overflow Error Flag	The allowed value for Differentiation Flags which correspond to differentiation instructions has been exceeded. CPU Unit operation will stop and the ERR/ALM indicator will light when this flag goes ON. (The task number where the error occurred will be stored in A294 and the program address will be stored in A298 and A299.)	ON: Error OFF: Normal	Cleared	Cleared	---	A294, A298/ A299
	A295.14	Illegal Instruction Error Flag	ON when a program that cannot be executed has been stored. CPU Unit operation will stop and the ERR/ALM indicator will light when this flag goes ON.	ON: Error OFF: Normal	Cleared	Cleared	---	A294, A298/ A299
	A295.15	UM Overflow Error Flag	ON when the last address in UM (User Memory) has been exceeded. CPU Unit operation will stop and the ERR/ALM indicator will light when this flag goes ON.	ON: Error OFF: Normal	Cleared	Cleared	---	A294, A298/ A299
A298	All	Program Address Where Program Stopped (Rightmost 4 digits)	These words contain the 8-digit binary program address of the instruction where program execution was stopped due to a program error. (A294 contains the task number of the task where program execution was stopped.)	Right 4 digits of the program address	Cleared	Cleared	---	A294
A299	All	Program Address Where Program Stopped (Leftmost 4 digits)		Left 4 digits of the program address	Cleared	Cleared	---	
A300	All	Error Log Pointer	When an error occurs, the Error Log Pointer is incremented by 1 to indicate the location where the next error record will be recorded as an offset from the beginning of the Error Log Area (A100 to A199). The Error Log Pointer can be cleared to 00 by turning A500.14 (the Error Log Reset Bit) ON. When the Error Log Pointer has reached 14 hex (20 decimal), the next record is stored in A195 to A199 when the next error occurs.	00 to 14 hexadecimal	Retained	Retained	Refreshed when error occurs.	A500.14

Address		Name	Function	Settings	Status after mode change	Status at start-up	Write timing	Related flags, settings
Words	**Bits**							
A310	All	Manufacturing Lot Number, Lower Digits	The manufacturing lot number is stored in 6 digits hexadecimal. X, Y, and Z in the lot number are converted to 10, 11, and 12, respectively. Examples: Lot number 01805 A310 = 0801, A311 = 0005 Lot number 30Y05 A310 =1130, A311 = 0005	---	Retained	Retained	---	---
A311	All	Manufacturing Lot Number, Upper Digits						
A315	A315.13	Option Board Error Flag	ON when the Option Board is removed while the power is being supplied. CPU Unit operation will continue and the ERR/ALM indicator will flash. OFF when the error has been cleared.	---	Cleared	Cleared	Refreshed when error occurs.	A402.00, A424
	A315.15	Flash Memory Error Flag	ON when writing to the internal flash memory fails. CPU Unit operation will continue and the ERR/ALM indicator will flash. OFF when the error has been cleared.	---	Cleared	Cleared	Refreshed when error occurs.	A402.00
A316 to A317	All	High-speed Counter 2 PV	Contains the PV of high-speed counter 2. A317 contains the leftmost 4 digits and A316 contains the rightmost 4 digits. The PV is cleared when operation starts.	---	---	Cleared	Refreshed each cycle during oversee process. Refreshed when PRV(881) instruction is executed.	---
A318 to A319	All	High-speed Counter 3 PV	Contains the PV of high-speed counter 3. A319 contains the leftmost 4 digits and A318 contains the rightmost 4 digits. The PV is cleared when operation starts.	---	---	Cleared		---
A320	A320.00	High-speed Counter 2 Range 1 Comparison Condition Met Flag	These flags indicate whether the PV is within the specified ranges when high-speed counter 2 is being operated in range-comparison mode. Cleared at beginning of operation. Cleared when range comparison table is registered. OFF: PV not in range ON: PV in range	---	---	Cleared	Refreshed each cycle during oversee process. Refreshed when PRV(881) instruction is executed.	---

Address		Name	Function	Settings	Status after mode change	Status at start-up	Write timing	Related flags, settings
Words	**Bits**							
A320	A320.01	High-speed Counter 2 Range 2 Comparison Condition Met Flag	These flags indicate whether the PV is within the specified ranges when high-speed counter 2 is being operated in range-comparison mode. Cleared at beginning of operation. Cleared when range comparison table is registered. OFF: PV not in range ON: PV in range	---	---	Cleared	Refreshed each cycle during oversee process. Refreshed when PRV(881) instruction is executed.	---
	A320.02	High-speed Counter 2 Range 3 Comparison Condition Met Flag						
	A320.03	High-speed Counter 2 Range 4 Comparison Condition Met Flag						
	A320.04	High-speed Counter 2 Range 5 Comparison Condition Met Flag						
	A320.05	High-speed Counter 2 Range 6 Comparison Condition Met Flag						
	A320.06	High-speed Counter 2 Range 7 Comparison Condition Met Flag						
	A320.07	High-speed Counter 2 Range 8 Comparison Condition Met Flag						
	A320.08	High-speed Counter 2 Comparison In-progress Flag	This flag indicates whether a comparison operation is being executed for high-speed counter 2. Cleared at beginning of operation. OFF: Stopped. ON: Being executed.	---	---	Cleared	Refreshed when comparison operation starts or stops.	---
	A320.09	High-speed Counter 2 Overflow/ Underflow Flag	This flag indicates when an overflow or underflow has occurred in the high-speed counter 2 PV. (Used with the linear mode counting range only.) Cleared when operation starts. Cleared when PV is changed. OFF: Normal ON: Overflow or underflow	---	---	Cleared	Refreshed when an overflow or underflow occurs.	---
	A320.10	High-speed Counter 2 Count Direction	This flag indicates whether the high-speed counter is currently being incremented or decremented. The counter PV for the current cycle is compared with the PLC in last cycle to determine the direction. OFF: Decrementing ON: Incrementing	---	---	Cleared	Setting used for high-speed counter, valid during counter operation.	---

Address		Name	Function	Settings	Status after mode change	Status at start-up	Write timing	Related flags, settings
Words	**Bits**							
A321	A321.00	High-speed Counter 3 Range 1 Comparison Condition Met Flag	These flags indicate whether the PV is within the specified ranges when high-speed counter 3 is being operated in range-comparison mode. Cleared when operation starts. Cleared when range comparison table is registered. OFF: PV not in range ON: PV in range	---	---	Cleared	Refreshed each cycle during overseeing process. Refreshed when PRV(881) instruction is executed for the corresponding counter.	---
	A321.01	High-speed Counter 3 Range 2 Comparison Condition Met Flag						
	A321.02	High-speed Counter 3 Range 3 Comparison Condition Met Flag						
	A321.03	High-speed Counter 3 Range 4 Comparison Condition Met Flag						
	A321.04	High-speed Counter 3 Range 5 Comparison Condition Met Flag						
	A321.05	High-speed Counter 3 Range 6 Comparison Condition Met Flag						
	A321.06	High-speed Counter 3 Range 7 Comparison Condition Met Flag						
	A321.07	High-speed Counter 3 Range 8 Comparison Condition Met Flag						
	A321.08	High-speed Counter 3 Comparison In-progress Flag	This flag indicates whether a comparison operation is being executed for high-speed counter 3. Cleared when operation starts. OFF: Stopped. ON: Being executed	---	---	Cleared	Refreshed when comparison operation starts or stops.	---
	A321.09	High-speed Counter 3 Overflow/ Underflow Flag	This flag indicates when an overflow or underflow has occurred in the high-speed counter 3 PV. (Used with the linear mode counting range only.) Cleared when operation starts. Cleared when the PV is changed. OFF: Normal ON: Overflow or underflow	---	---	Cleared	Refreshed when an overflow or underflow occurs.	---
	A321.10	High-speed Counter 3 Count Direction	This flag indicates whether the high-speed counter is currently being incremented or decremented. The counter PV for the current cycle is compared with the PC in last cycle to determine the direction. OFF: Decrementing ON: Incrementing	---	---	Cleared	Setting used for high-speed counter, valid during counter operation.	---
A339 and A340	All	Maximum Differentiation Flag Number	These words contain the maximum value of the differentiation flag numbers being used by differentiation instructions.	---	See Function column.	Cleared	Written at the start of operation	A295.13

Address		Name	Function	Settings	Status after mode change	Status at start-up	Write timing	Related flags, settings
Words	Bits							
A342	A342.03	Memory Cassette Write Flag	ON when data is being written to the Memory Cassette.	OFF: Not writing ON: Writing	Retained	Cleared	---	---
	A342.04	Memory Cassette Read Flag	ON when data is being read from the Memory Cassette.	OFF: Not reading ON: Reading	Retained	Cleared	---	---
	A342.05	Memory Cassette Verify Flag	ON when data is being compared with data on the Memory Cassette.	OFF: Not verifying ON: Verifying	Retained	Cleared	---	---
	A342.07	Memory Cassette Initialization Error Flag	ON when an error occurs in initializing the Memory Cassette. OFF the next time the Memory Cassette is accessed normally (initialized, written, read, or compared).	OFF: No error ON: Error	Retained	Cleared	---	---
	A342.08	Memory Cassette Write Error Flag	ON when an error occurs in writing the Memory Cassette. OFF the next time the Memory Cassette is accessed normally (initialized, written, read, or compared).	OFF: No error ON: Error	Retained	Cleared	---	---
	A342.10	Memory Cassette Read Error Flag	ON when an error occurs in reading the Memory Cassette. OFF the next time the Memory Cassette is accessed normally (initialized, written, read, or compared).	OFF: No error ON: Error	Retained	Cleared	---	---
	A342.12	Memory Cassette Mismatch Flag	ON the data in the CPU Unit is not the same as the data in the Memory Cassette when a verification operation is performed. OFF the next time the Memory Cassette is accessed normally (initialized, written, read, or compared).	OFF: Match ON: Mismatch	Retained	Cleared	---	---
	A342.13	Memory Cassette Access Flag	ON when the Memory Cassette is being accessed. OFF when access is completed.	OFF: Not being accessed ON: Being accessed		Cleared	---	---
	A342.15	Memory Cassette Flag	ON when a Memory Cassette is mounted. OFF when a Memory Cassette is not mounted.	OFF: No Memory Cassette ON: Memory Cassette mounted	Retained	Cleared	---	---
A345	A345.00	FB Program Data Flag	Turns ON if the FB program memory contains FB program data.	OFF: No data ON: Data present	Retained	Cleared	Downloading programs from CX-Programmer or Memory Cassette or clearing VM	---
	A345.01	Program Index File Flag	Turns ON when the comment memory contains a program index file.	OFF: No file ON: File present			Downloading programs from CX-Programmer or Memory Cassette	
	A345.02	Comment File Flag	Turns ON when the comment memory contains a comment file.	OFF: No file ON: File present				
	A345.03	Symbol Table File Flag	Turns ON when the comment memory contains a symbol table file.	OFF: No file ON: File present				
	A345.04	DM Initial Values Flag	ON when DM initial values are stored in the flash memory.	OFF: No values stored ON: Values stored	---	---	---	---

Address		Name	Function	Settings	Status after mode change	Status at start-up	Write timing	Related flags, settings
Words	**Bits**							
A351 to A354	All	Calendar/ Clock Area	These words contain the CPU Unit's internal clock data in BCD. The clock can be set from the CX-Programmer such as a Programming Console, with the DATE(735) instruction, or with a FINS command (CLOCK WRITE, 0702).	---	Retained	Retained	Written every cycle	---
	A351.00 to A351.07		Seconds (00 to 59) (BCD)					
	A351.08 to A351.15		Minutes (00 to 59) (BCD)					
	A352.00 to A352.07		Hours (00 to 23) (BCD)					
	A352.08 to A352.15		Day of the month (01 to 31) (BCD)					
	A353.00 to A353.07		Month (01 to 12) (BCD)					
	A353.08 to A353.15		Year (00 to 99) (BCD)					
	A354.00 to A354.07		Day of the week (00 to 06) (BCD) 00: Sunday, 01: Monday, 02: Tuesday, 03: Wednesday, 04: Thursday, 05: Friday, 06: Saturday					
A360 to A391	A360.01 to A391.15	Executed FAL Number Flags	The flag corresponding to the specified FAL number will be turned ON when FAL(006) is executed. Bits A360.01 to A391.15 correspond to FAL numbers 001 to 511. The flag will be turned OFF when the error is cleared.	ON: That FAL was executed OFF: That FAL wasn't executed	Retained	Cleared	Refreshed when error occurs.	A402.15

Address		Name	Function	Settings	Status after mode change	Status at start-up	Write timing	Related flags, settings
Words	**Bits**							
A392	A392.04	Serial Port 2 Error Flag (CP1L M-type CPU Units)	ON when an error has occurred at serial port 2 of a CP1L M-type CPU Unit. (Not valid in Peripheral Bus Mode or NT Link mode.)	ON: Error OFF: No error	Retained	Cleared	Refreshed when error occurs.	---
		Serial Port 1 Error Flag (CP1L L-type CPU Units)	ON when an error has occurred at serial port 1 of a CP1L L-type CPU Unit. (Not valid in Peripheral Bus Mode or NT Link mode.)					
	A392.05	Serial Port 2 Send Ready Flag (No-protocol mode) (CP1L M-type CPU Units)	ON when the serial port 2 of a CP1L M-type CPU Unit is able to send data in no-protocol mode.	ON: Able-to-send OFF: Unable-to-send	Retained	Cleared	Written after transmission	---
		Serial Port 1 Send Ready Flag (No-protocol mode) (CP1L L-type CPU Units)	ON when the serial port 1 of a CP1L L-type CPU Unit is able to send data in no-protocol mode.					
	A392.06	Serial Port 2 Reception Completed Flag (No-protocol mode) (CP1L M-type CPU Units)	ON when the serial port 2 of a CP1L M-type CPU Unit has completed the reception in no-protocol mode. • When the number of bytes was specified: ON when the specified number of bytes is received. • When the end code was specified: ON when the end code is received or 256 bytes are received.	ON: Reception completed OFF: Reception not completed	Retained	Cleared	Written after reception	---
		Serial Port 1 Reception Completed Flag (No-protocol mode) (CP1L L-type CPU Units)	ON when the serial port 1 of a CP1L L-type CPU Unit has completed the reception in no-protocol mode. • When the number of bytes was specified: ON when the specified number of bytes is received. • When the end code was specified: ON when the end code is received or 256 bytes are received.					
	A392.07	Serial Port 2 Reception Overflow Flag (No-protocol mode) (CP1L M-type CPU Units)	ON when a data overflow occurred during reception through the serial port 2 of a CP1L M-type CPU Unit in no-protocol mode. • When the number of bytes was specified: ON when more data is received after the reception was completed but before RXD(235) was executed. • When the end code was specified: ON when more data is received after the end code was received but before RXD(235) was executed. ON when 257 bytes are received before the end code.	ON: Overflow OFF: No overflow	Retained	Cleared	---	---
		Serial Port 1 Reception Overflow Flag (No-protocol mode) (CP1L L-type CPU Units)	ON when a data overflow occurred during reception through the serial port 1 of a CP1L L-type CPU Unit in no-protocol mode. • When the number of bytes was specified: ON when more data is received after the reception was completed but before RXD(235) was executed. • When the end code was specified: ON when more data is received after the end code was received but before RXD(235) was executed. ON when 257 bytes are received before the end code.					

Address		Name	Function	Settings	Status after mode change	Status at start-up	Write timing	Related flags, settings
Words	**Bits**							
A392	A392.12	Serial Port 1 Communications Error Flag (CP1L M-type CPU Units)	• ON when a communications error has occurred at the serial port 1 of a CP1L M-type CPU Unit. (Not valid in Peripheral Bus Mode or NT Link mode.) • ON when a timeout error, overrun error, framing error, parity error, or BCC error occurs in Serial Gateway mode.	ON: Error OFF: No error	Retained	Cleared	---	---
	A392.13	Serial Port 1 Send Ready Flag (No-protocol Mode) (CP1L M-type CPU Units)	ON when the serial port 1 of a CP1L M-type CPU Unit is able to send data in no-protocol mode.	ON: Able-to-send OFF: Unable-to-send	Retained	Cleared	Written after transmission	---
	A392.14	Serial Port 1 Reception Completed Flag (No-protocol Mode) (CP1L M-type CPU Units)	ON when the serial port 1 of a CP1L M-type CPU Unit has completed the reception in no-protocol mode. • When the number of bytes was specified: ON when the specified number of bytes is received. • When the end code was specified: ON when the end code is received or 256 bytes are received.	ON: Reception completed OFF: Reception not completed	Retained	Cleared	Written after reception	---
	A392.15	Serial Port 1 Reception Overflow Flag (No-protocol Mode) (CP1L M-type CPU Units)	ON when a data overflow occurred during reception through the serial port 1 of a CP1L M-type CPU Unit in no-protocol mode. • When the number of bytes was specified: ON when more data is received after the reception was completed but before RXD(235) was executed. • When the end code was specified: ON when more data is received after the end code was received but before RXD(235) was executed. ON when 257 bytes are received before the end code.	ON: Overflow OFF: No overflow	Retained	Cleared	---	---

Address		Name	Function	Settings	Status after mode change	Status at start-up	Write timing	Related flags, settings
Words	**Bits**							
A393	A393.00 to A393.07	Serial Port 2 PT Communications Flags (CP1L M-type CPU Units)	The corresponding bit will be ON when the serial port 2 of a CP1L M-type CPU Unit is communicating with a PT in NT Link or Serial PLC Link mode. Bits 0 to 7 correspond to units 0 to 7.	ON: Communicating OFF: Not communicating	Retained	Cleared	Refreshed when there is a normal response to the token.	---
		Serial Port 1 PT Communications Flags (CP1L L-type CPU Units)	The corresponding bit will be ON when the serial port 1 of a CP1L L-type CPU Unit is communicating with a PT in NT Link or Serial PLC Link mode. Bits 0 to 7 correspond to units 0 to 7.					
	A393.08 to A393.15	Serial Port 2 PT Priority Registered Flags (CP1L M-type CPU Units)	The corresponding bit will be ON for the PT that has priority when the serial port 2 of a CP1L M-type CPU Unit is communicating in NT link mode. Bits 0 to 7 correspond to units 0 to 7. These flags are written when the priority registration command is received.	ON: Priority registered OFF: Priority not registered	Retained	Cleared	See *Function* column.	---
		Serial Port 1 PT Priority Registered Flags (CP1L L-type CPU Units)	The corresponding bit will be ON for the PT that has priority when the serial port 1 of a CP1L L-type CPU Unit is communicating in NT link mode. Bits 0 to 7 correspond to units 0 to 7. These flags are written when the priority registration command is received.					
	A393.00 to A393.15	Serial Port 2 Reception Counter (No-protocol Mode) (CP1L M-type CPU Units)	Indicates (in binary) the number of bytes of data received when the serial port 2 of a CP1L M-type CPU Unit is in no-protocol mode.	---	Retained	Cleared	Refreshed when data is received.	---
		Serial Port 1 Reception Counter (No-protocol Mode) (CP1L L-type CPU Units)	Indicates (in binary) the number of bytes of data received when the serial port 1 of a CP1L L-type CPU Unit is in no-protocol mode.					
A394	A394.00 to A394.07	Serial Port 1 PT Communications Flags (CP1L M-type CPU Units)	The corresponding bit will be ON when the serial port 1 of a CP1L M-type CPU Unit is communicating with a PT in NT link mode. Bits 0 to 7 correspond to units 0 to 7.	ON: Communicating OFF: Not communicating	Retained	Cleared	Refreshed when there is a normal response to the token.	---
	A394.08 to A394.15	Serial Port 1 PT Priority Registered Flags (CP1L M-type CPU Units)	The corresponding bit will be ON for the PT that has priority when the serial port 1 of a CP1L M-type CPU Unit is communicating in NT link mode. Bits 0 to 7 correspond to units 0 to 7.	ON: Priority registered OFF: Priority not registered	Retained	Cleared	See *Function* column.	---
	A394.00 to A394.15	Serial Port 1 Reception Counter (No-protocol Mode) (CP1L L-type CPU Units)	Indicates (in binary) the number of bytes of data received when serial port 1 of a CP1L L-type CPU Unit is in no-protocol mode.	---	Retained	Cleared	Refreshed when data is received.	---
A395	A395.12	DIP Switch Pin 6 Status Flag	The status of pin 6 on the DIP switch on the front of the CPU Unit is written to this flag every cycle.	ON: Pin 6 ON OFF: Pin 6 OFF	Retained	See Function column.	Written every cycle.	---

Address		Name	Function	Settings	Status after mode change	Status at start-up	Write timing	Related flags, settings
Words	Bits							
A400	All	Error code	When a non-fatal error (user-defined FALS(006) or system error) or a fatal error (user-defined FALS(007) or system error) occurs, the 4-digit hexadecimal error code is written to this word. When two or more errors occur simultaneously, the highest error code will be recorded.	---	Cleared	Cleared	Refreshed when error occurs.	---
A401	A401.00	Other Fatal Error Flag	ON when a fatal error that is not defined for A401.01 to A401.15 occurs. Detailed information is output to the bits of A314. There are no errors that affect this flag at this time. This flag is reserved by the system.	OFF: No other fatal error ON: Other fatal error	Cleared	Cleared	Refreshed when error occurs.	A314
	A401.06	FALS Error Flag (fatal error)	ON when a fatal error is generated by the FALS(006) instruction. The CPU Unit will stop operating and the ERR/ALM indicator will light. The corresponding error code will be written to A400. Error codes C101 to C2FF correspond to FALS numbers 001 to 511. This flag will be turned OFF when the FALS errors are cleared.	ON: FALS(006) executed OFF: FALS(006) not executed	Cleared	Cleared	Refreshed when error occurs.	A400
	A401.08	Cycle Time Too Long Flag (fatal error)	ON if the cycle time exceeds the maximum cycle time set in the PLC Setup (the cycle time monitoring time). CPU Unit operation will stop and the ERR/ALM indicator on the front of the CPU Unit will light. This flag will be turned OFF when the error is cleared.	OFF: Cycle time under max. ON: Cycle time over max.	Cleared	Cleared	Refreshed when the cycle time exceeds maximum.	PLC Setup (Cycle time monitoring time)
	A401.09	Program Error Flag (fatal error)	ON when program contents are incorrect. CPU Unit operation will stop and the ERR/ALM indicator on the front of the CPU Unit will light. The task number where the error occurred will be stored in A294 and the program address will be stored in A298 and A299. The type of program error that occurred will be stored in A295.08 to A295.15. Refer to the description of A295 for more details on program errors. This flag will be turned OFF when the error is cleared.	ON: Error OFF: No error	Cleared	Cleared	Refreshed when error occurs.	A294, A295, A298 and A299

Address		Name	Function	Settings	Status after mode change	Status at start-up	Write timing	Related flags, settings
Words	Bits							
A401	A401.11	Too Many I/O Points Flag (fatal error)	ON when the number of Expansion Units and Expansion I/O Units exceeds the limit, when the number of words allocated to these Units exceeds the limit, are mounted. CPU Unit operation will stop and the ERR/ALM indicator on the front of the CPU Unit will light. This flag will be turned OFF when the error is cleared.	ON: Error OFF: No error	Cleared	Cleared	Refreshed when error occurs.	A407
	A401.14	I/O Bus Error Flag (fatal error)	ON in the following cases: • When an error occurs in a data transfer between the CPU Unit and a Expansion Unit or Expansion I/O Unit. If this happens, 0A0A hex will be output to A404. CPU Unit operation will stop and the ERR/ALM indicator on the front of the CPU Unit will light. (This flag will be turned OFF when the error is cleared.)	ON: Error OFF: No error	Cleared	Cleared	Refreshed when error occurs.	A404
	A401.15	Memory Error Flag (fatal error)	ON when an error occurred in memory or there was an error in automatic transfer from the Memory Cassette when the power was turned ON. CPU Unit operation will stop and the ERR/ALM indicator on the front of the CPU Unit will light. The location where the error occurred is indicated in A403.00 to A403.08, and A403.09 will be turned ON if there was an error during automatic transfer at startup. This flag will be turned OFF when the error is cleared. (The automatic transfer at startup error cannot be cleared without turning OFF the PLC.)	ON: Error OFF: No error	Cleared	Cleared	Refreshed when error occurs.	A403.00 to A403.08, A403.09
A402	A402.00	Other Fatal Error Flag	ON when a non-fatal error that is not defined for A402.01 to A402.15 occurs. Detailed information is output to the bits of A314. There are no errors that affect this flag at this time. This flag is reserved by the system.	OFF: No other fatal error ON: Other fatal error	Cleared	Cleared	Refreshed when error occurs.	A315
	A402.04	Battery Error Flag (non-fatal error)	ON if the CPU Unit's battery is disconnected or its voltage is low and the Detect Battery Error setting has been set in the PLC Setup. The CPU Unit will continue operating and the ERR/ALM indicator on the front of the CPU Unit will flash. This flag can be used to control an external warning light or other indicator to indicate that the battery needs to be replaced. (This flag will be turned OFF when the error is cleared.)	ON: Error OFF: No error	Cleared	Cleared	Refreshed when error occurs.	PLC Setup (Detect Battery Error)
	A402.10	PLC Setup Error Flag (non-fatal error)	ON when there is a setting error in the PLC Setup. The CPU Unit will continue operating and the ERR/ALM indicator on the front of the CPU Unit will flash. The location of the error will be written to A406. (This flag will be turned OFF when the error is cleared.)	ON: Error OFF: No error	Cleared	Cleared	Refreshed when error occurs.	A406

Address		Name	Function	Settings	Status after mode change	Status at start-up	Write timing	Related flags, settings
Words	**Bits**							
A402	A402.15	FAL Error Flag (non-fatal error)	ON when a non-fatal error is generated by executing FAL(006). The CPU Unit will continue operating and the ERR/ALM indicator on the front of the CPU Unit will flash. The bit in A360 to A391 that corresponds to the FAL number specified in FALS(006) will be turned ON and the corresponding error code will be written to A400. Error codes 4101 to 42FF correspond to FAL numbers 001 to 2FF (0 to 511). (This flag will be turned OFF when the error is cleared.)	ON: FALS(006) error occurred OFF: FALS(006) not executed	Cleared	Cleared	Refreshed when error occurs.	A360 to A391, A400
A403	A403.00 to A403.08	Memory Error Location	When a memory error occurs, the Memory Error Flag (A40115) is turned ON and one of the following flags is turned ON to indicate the memory area where the error occurred A403.00: User program A403.04: PLC Setup A403.07: Routing Table When a memory error occurs, the CPU Unit will continue operating and the ERR/ALM indicator on the front of the CPU Unit will flash. (The corresponding flag will be turned OFF when the error is cleared.)	ON: Error OFF: No error	Cleared	Cleared	Refreshed when error occurs.	A401.15
	A403.09	Memory Cassette startup Transfer Error Flag	ON when automatic transfer at startup has been selected and an error occurs during automatic transfer. An error will occur if there is a transfer error, the specified file does not exist, or the Memory Cassette is not installed. (This flag will be turned OFF when the error is cleared by turning the power OFF. The error cannot be cleared without turning the power OFF.)	ON: Error OFF: No error	Cleared	Cleared	Refreshed when power is turned ON.	---
	A403.10	Flash Memory Error Flag	ON when the flash memory is physically destroyed.	ON: Error OFF: No error	Cleared	Cleared	Refreshed when error is detected.	---
A404	All	I/O Bus Error Details	Contains information on I/O bus errors. The CPU Unit will stop operating and the ERR/ALM indicator on the front of the CPU Unit will light. (A401.04 (I/O Bus Error Flag) will turn ON.) (This information will be cleared when the error is cleared.)	0A0A hex: CPM1A Unit error 0000 hex: CJ-series Unit error, 1st Unit 0001 hex: CJ-series Unit error, 2nd Unit 0F0F hex: CJ-series Unit error, unknown Unit 0E0E hex: CJ-series Unit error, no End cover	Cleared	Cleared	Refreshed when error is detected.	A401.14

Address		Name	Function	Settings	Status after mode change	Status at start-up	Write timing	Related flags, settings
Words	**Bits**							
A406	All	PLC Setup Error Location	When there is a setting error in the PLC Setup, the location of that error is written to A406 in 4-digit hexadecimal. The CPU Unit will continue operating and the ERR/ALM indicator on the front of the CPU Unit will flash. (A406 will be cleared when the cause of the error is eliminated.)	0000 to 01FF hexadecimal	Cleared	Cleared	Refreshed when error occurs.	A402.10
A407	A407.00 to A407.12	Too Many I/O Points, Details	Always 0000 hex.	0000 hex	Cleared	Cleared	---	A401.11, A407.13 to A407.15
	A407.13 to A407.15	Too Many I/O Points, Cause	The 3-digit binary value of these bits indicates the cause of the Too Many I/O Points Error. **Note** These bits will be cleared when the error is cleared.	010: Too many Expansion Unit and Expansion I/O Unit words 011: Too many Expansion Units and Expansion I/O Units	Cleared	Cleared	Refreshed when error occurs.	---
A424	A424.00 to A424.15	Error Option Board Flags	The bit corresponding to the option slot turns ON when an error occurs in an Option Board (A315.13 will be ON). Bit 00: Option slot 1 Bit 01: Option slot 2	ON: Error OFF: No error	Cleared	Cleared	---	A353.13
A436	A436.00 to A436.02	CPM1A Unit Error Flags	ON when an error occurs in a CP-series Expansion Unit or Expansion I/O Unit. A436.00: 1st Unit A436.10: 2nd Unit A436.02: 3rd Unit	OFF: No error ON: Error	Retained	Cleared	---	---
A437	All	Number of Connected CPM1A Units	Stores the number of Expansion Units and Expansion I/O Units connected as a hexadecimal number. **Note** This information is valid only when a Too Many I/O Points error has occurred. CP1W/CPM1A-TS002 and CP1W/CPM1A-TS102 are each counted as two Units.	0000 to 0007 hex	Retained	Cleared	---	---
A438	All	Pulse Output 2 Stop Error Code	If a Pulse Output Stop Error occurs for pulse output 2, the error code is stored.	---	Retained	Cleared	Refreshed when origin search starts. Refreshed when a pulse output stop error occurs.	---
A439	All	Pulse Output 3 Stop Error Code	If a Pulse Output Stop Error occurs for pulse output 3, the error code is stored.	---	Retained	Cleared	Refreshed when origin search starts. Refreshed when a pulse output stop error occurs.	---
A440	All	Max. Interrupt Task Processing Time	Contains the Maximum Interrupt Task Processing Time in units of 0.1 ms. (This value is written after the interrupt task with the max. processing time is executed and cleared when PLC operation begins.)	0000 to FFFF hexadecimal	Cleared	Cleared	See Function column.	---

Address		Name	Function	Settings	Status after mode change	Status at start-up	Write timing	Related flags, settings
Words	**Bits**							
A441	All	Interrupt Task With Max. Processing Time	Contains the task number of the interrupt task with the maximum processing time. Hexadecimal values 8000 to 80FF correspond to task numbers 00 to FF. Bit 15 is turned ON when an interrupt has occurred. (This value is written after the interrupt task with the max. processing time is executed and cleared when PLC operation begins.)	8000 to 80FF hexadecimal	Cleared	Cleared	See Function column.	---
A444	All	Pulse Output 0 Stop Error Code	If a Pulse Output Stop Error occurs for pulse output 0, the error code is written to this word.	---	---	Cleared	Refreshed when origin search starts. Refreshed when a pulse output stop error occurs.	---
A445		Pulse Output 1 Stop Error Code	If a Pulse Output Stop Error occurs for pulse output 1, the error code is written to this word.	---	---			---
A494	A494.00 to A494.07	Memory Casette Verification Results	Stores the results of comparing data in the Memory Cassette and CPU Unit. This information is cleared the next time the Memory Cassette is accessed normally (initialized, written, read, or compared). A494.00: User program is different. A494.01: Function block sources are different. A494.02: Parameter area is different. A494.03: Symbol table is different. A494.04: Comments are different. A494.05: Program indices are different. A494.06: Data memory is different. A494.07: DM initial values are different.	OFF: Match ON: Mismatch			When Memory Cassette is compared.	

Read/Write Area (Set by User)

Addresses		Name	Function	Settings	Status after mode change	Status at startup	Write timing	Related Flags, Settings
Word	Bits							
A500	A500.12	IOM Hold Bit	Turn this bit ON to preserve the status of the I/O Memory when shifting from PROGRAM to RUN or MONITOR mode or vice versa. The I/O Memory includes the CIO Area, Transition Flags, Timer Flags and PVs, Index Registers, and Data Registers. (If the status of the IOM Hold Bit itself is preserved in the PLC Setup (IOM Hold Bit Status), the status of the I/O Memory Area will be retained when the PLC is turned ON or power is interrupted.)	ON: Retained OFF: Not retained	Retained	See Function column.	See Function column.	PLC Setup (IOM Hold Bit Status setting)
	A500.13	Forced Status Hold Bit	Turn this bit ON to preserve the status of bits that have been force-set or force-reset when shifting from PROGRAM to MONITOR mode or vice versa. Bits that have been force-set or force-reset will always return to their default status when shifting to RUN mode. (If the status of the Forced Status Hold Bit itself is preserved in the PLC Setup (Forced Status Hold Bit Status), the status of force-set and force-reset bits will be retained when the PLC is turned ON or power is interrupted.)	ON: Retained OFF: Not retained	Retained	See Function column.	See Function column.	PLC Setup (Forced Status Hold Bit Status setting)
	A500.14	Error Log Reset Bit	Turn this bit ON to reset the Error Log Pointer (A300) to 00. The contents of the Error Log Area itself (A100 to A199) are not cleared. (This bit is automatically reset to 0 after the Error Log Pointer is reset.)	OFF to ON: Clear	Retained	Cleared	---	A100 to A199, A300
	A500.15	Output OFF Bit	Turn this bit ON to turn OFF all outputs from the CPU Unit, CPM1A Units, and Special I/O Units. The INH indicator on the front of the CPU Unit will light while this bit is ON. (The status of the Output OFF Bit is retained through power interruptions.)	---	Retained	Retained	---	---

Addresses		Name	Function	Settings	Status after mode change	Status at startup	Write timing	Related Flags, Settings
Word	Bits							
A508	A508.09	Differentiate Monitor Completed Flag	ON when the differentiate monitor condition has been established during execution of differentiation monitoring. (This flag will be cleared to 0 when differentiation monitoring starts.)	ON: Monitor condition established OFF: Not yet established	Retained	Cleared	---	---
	A508.11	Trace Trigger Monitor Flag	ON when a trigger condition is established by the Trace Start Bit (A508.14). OFF when the next Data Trace is started by the Sampling Start bit (A508.15).	ON: Trigger condition established OFF: Not yet established or not tracing	Retained	Cleared	---	---
	A508.12	Trace Completed Flag	ON when sampling of a region of trace memory has been completed during execution of a Trace. OFF when the next time the Sampling Start Bit (A508.15) is turned ON.	ON: Trace completed OFF: Not tracing or trace in progress	Retained	Cleared	---	---
	A508.13	Trace Busy Flag	ON when the Sampling Start Bit (A508.15) is turned ON. OFF when the trace is completed.	ON: Trace in progress OFF: Not tracing (not sampling)	Retained	Cleared	---	---
	A508.14	Trace Start Bit	Turn this bit ON to establish the trigger condition. The offset indicated by the delay value (positive or negative) determines which data samples are valid.	ON: Trace trigger condition established OFF: Not established	Retained	Cleared	---	---
	A508.15	Sampling Start Bit	When a data trace is started by turning this bit ON from the CX-Programmer, the PLC will begin storing data in Trace Memory by one of the three following methods: 1) Data is sampled at regular intervals (10 to 2,550 ms). 2) Data is sampled when TRSM(045) is executed in the program. 3) Data is sampled at the end of every cycle. The operation of A508.15 can be controlled only from the CX-Programmer.	OFF to ON: Starts data trace (sampling) Turned ON from Programming Device.	Retained	Cleared	---	---
A510 to A511	All	startup Time	These words contain the time at which the power was turned ON. The contents are updated every time that the power is turned ON. The data is stored in BCD. A510.00 to A510.07: Second (00 to 59) A510.08 to A510.15: Minute (00 to 59) A511.00 to A511.07: Hour (00 to 23) A511.08 to A511.15: Day of month (01 to 31)	See Function column.	Retained	See Function column.	Refreshed when power is turned ON.	---
A512 to A513	All	Power Interruption Time	These words contain the time at which the power was interrupted. The contents are updated every time that the power is interrupted. The data is stored in BCD. A512.00 to A512.07: Second (00 to 59) A512.08 to A512.15: Minute (00 to 59) A513.00 to A513.07: Hour (00 to 23) A513.08 to A513.15: Day of month (01 to 31) (These words are not cleared at startup.)	See Function column.	Retained	Retained	Written at power interruption	---

Addresses		Name	Function	Settings	Status after mode change	Status at startup	Write timing	Related Flags, Settings
Word	Bits							
A514	All	Number of Power Interruptions	Contains the number of times that power has been interrupted since the power was first turned ON. The data is stored in binary. To reset this value, overwrite the current value with 0000. (This word is not cleared at startup, but it is cleared when the Memory Corruption Detected Flag (A395.11) goes ON.)	0000 to FFFF hexadecimal	Retained	Retained	Refreshed when power is turned ON.	A395.11
A515 to A517	All	Operation Start Time	The time that operation started as a result of changing the operating mode to RUN or MONITOR mode is stored here in BCD. A515.00 to A515.07: Seconds (00 to 59) A515.08 to A515.15: Minutes (00 to 59) A516.00 to A516.07: Hour (00 to 23) A516.08 to A516.15: Day of month (01 to 31) A517.00 to A517.07: Month (01 to 12) A517.08 to A517.15: Year (00 to 99) **Note** The previous start time is stored after turning ON the power supply until operation is started.	See at left.	Retained	Retained	See at left.	---
A518 to A520	All	Operation End Time	The time that operation stopped as a result of changing the operating mode to PROGRAM mode is stored here in BCD. A518.00 to A518.07: Seconds (00 to 59) A518.08 to A518.15: Minutes (01 to 59) A519.00 to A519.07: Hour (00 to 23) A519.08 to A519.15: Day of month (01 to 31) A520.00 to A520.07: Month (01 to 12) A520.08 to A520.15: Year (00 to 99) **Note** If an error occurs in operation, the time of the error will be stored. If the operating mode is then changed to PROGRAM mode, the time that PROGRAM mode was entered will be stored.	See at left.	Retained	Retained	See at left.	---
A523	All	Total Power ON Time	Contains the total time that the PLC has been ON in 10-hour units. The data is stored in binary and it is updated every 10 hours. To reset this value, overwrite the current value with 0000. (This word is not cleared at startup, but it is cleared to 0000 when the Memory Corruption Detected Flag (A395.11) goes ON.)	0000 to FFFF hexadecimal	Retained	Retained	---	---

Addresses		Name	Function	Settings	Status after mode change	Status at startup	Write timing	Related Flags, Settings
Word	Bits							
A525	A525.00	Ethernet Option Board Reset Flag (Serial Port 2)	Turn this bit ON to reset the Ethernet Option Board mounted on the serial port 2.	OFF to ON: Reset	Retained	Cleared	---	---
	A525.01	Ethernet Option Board Reset Flag (Serial Port 1)	Turn this bit ON to reset the Ethernet Option Board mounted on the serial port 1.	OFF to ON: Reset	Retained	Cleared	---	---
	A525.08	Ethernet Option Board Restart Flag (Serial Port 2)	Turn this bit ON to restart the Ethernet Option Board mounted on the serial port 2.	OFF to ON: Restart	Retained	Cleared	---	---
	A525.09	Ethernet Option Board Restart Flag (Serial Port 1)	Turn this bit ON to restart Ethernet Option Board mounted on the serial port 1.	OFF to ON: Restart	Retained	Cleared	---	---
A526	A526.00	Serial Port 2 Restart Bit (CP1L M-type CPU Units)	Turn this bit ON to restart the serial port 2 of a CP1L M-type CPU Unit. (Do not use this bit when the port is operating in Peripheral Bus Mode.) **Note** This bit is turned OFF automatically when the restart processing is completed.	OFF to ON: Restart	Retained	Cleared	---	---
		Serial Port 1 Restart Bit (CP1L L-type CPU Units)	Turn this bit ON to restart the serial port 1 of a CP1L L-type CPU Unit. (Do not use this bit when the port is operating in Peripheral Bus Mode.) **Note** This bit is turned OFF automatically when the restart processing is completed.					
	A526.01	Serial Port 1 Restart Bit (CP1L M-type CPU Units)	Turn this bit ON to restart the serial port 1 of a CP1L M-type CPU Unit. **Note** This bit is turned OFF automatically when the restart processing is completed.	0 to ON: Restart	Retained	Cleared	---	---
A527	A527.00 to A527.07	Online Editing Disable Bit Validator	The Online Editing Disable Bit (A527.09) is valid only when this byte contains 5A. To disable online editing from the CX-Programmer, set this byte to 5A and turn ON A527.09. (Online editing refers to changing or adding to the program while the PLC is operating in MONITOR mode.)	5A: A527.09 enabled Other value: A527.09 disabled	Retained	Cleared	---	A527.09
	A527.09	Online Editing Disable Bit	Turn this bit ON to disable online editing. The setting of this bit is valid only when A527.00 to A527.07 have been set to 5A.	ON: Disabled OFF: Not disabled	Retained	Cleared	---	A527.00 to A527.07

Addresses		Name	Function	Settings	Status after mode change	Status at startup	Write timing	Related Flags, Settings
Word	Bits							
A528	A528.00 to A528.07	Serial Port 2 Error Flags (CP1L M-type CPU Units)	These flags indicate what kind of error has occurred at the serial port 2 of a CP1L M-type CPU Unit; they are automatically turned OFF when the serial port 2 is restarted. (These flags are not valid in peripheral bus mode and only bit 5 is valid in NT Link mode.) PLC Link Polling Unit: Bit 05: ON for timeout error. PLC Link Polled Unit: Bit 03: ON for framing error. Bit 04: ON for overrun error. Bit 05: ON for timeout error. These bits can be cleared by the CX-Programmer.	Bits 00 and 01: Not used. Bit 02: ON for parity error. Bit 03: ON for framing error. Bit 04: ON for overrun error. Bit 05: ON for timeout error. Bits 06 and 07: Not used.	Retained	Cleared	---	---
		Serial Port 1 Error Flags (CP1L L-type CPU Units)	These flags indicate what kind of error has occurred at the serial port 1 of a CP1L L-type CPU Unit; they are automatically turned OFF when the serial port 1 is restarted. (These flags are not valid in peripheral bus mode and only bit 5 is valid in NT Link mode.) PLC Link Polling Unit: Bit 05: ON for timeout error. PLC Link Polled Unit: Bit 03: ON for framing error. Bit 04: ON for overrun error. Bit 05: ON for timeout error. These bits can be cleared by the CX-Programmer.					
	A528.08 to A528.15	Serial Port 1 Error Code (CP1L M-type CPU Units)	These flags indicate what kind of error has occurred at the serial port 1 of a CP1L M-type CPU Unit; they are automatically turned OFF when the serial port 1 is restarted. (These flags are not valid in peripheral bus mode and only bit 5 is valid in NT Link mode.) PLC Link Polling Unit: Bit 13: ON for timeout error. PLC Link Polled Unit: Bit 11: ON for framing error. Bit 12: ON for overrun error. Bit 13: ON for timeout error. These bits can be cleared by the CX-Programmer.	Bits 08 and 09: Not used. Bit 10: ON for parity error. Bit 11: ON for framing error. Bit 12: ON for overrun error. Bit 13: ON for timeout error. Bits 14 and 15: Not used.	Retained	Cleared	---	---
A529	All	FAL/FALS Number for System Error Simulation	Set a dummy FAL/FALS number to use to simulate the system error using FAL(006) or FALS(007). When FAL(006) or FALS(007) is executed and the number in A529 is the same as the one specified in the operand of the instruction, the system error given in the operand of the instruction will be generated instead of a user-defined error.	0001 to 01FF hex: FAL/FALS numbers 1 to 511 0000 or 0200 to FFFF hex: No FAL/FALS number for system error simulation. (No error will be generated.)	Retained	Cleared	---	---
A531	A531.00	High-speed Counter 0 Reset Bit	When the reset method is set to Phase-Z signal + Software reset, the corresponding high-speed counter's PV will be reset if the phase-Z signal is received while this bit is ON. When the reset method is set to Software reset, the corresponding high-speed counter's PV will be reset in the cycle when this bit turns ON.	---	Retained	Cleared	---	---
	A531.01	High-speed Counter 1 Reset Bit		---	Retained	Cleared	---	---

Addresses		Name	Function	Settings	Status after mode change	Status at startup	Write timing	Related Flags, Settings
Word	Bits							
A531	A531.08	High-speed Counter 0 Gate Bit	When a counter's Gate Bit is ON, the counter's PV will not be changed even if pulse inputs are received for the counter. When the bit is turned OFF again, counting will restart and the high-speed counter's PV will be refreshed. When the reset method is set to Phase-Z signal + Software reset, the Gate Bit is disabled while the corresponding Reset Bit (A531.00 or A531.01) is ON.	---	Retained	Cleared	---	---
	A531.09	High-speed Counter 1 Gate Bit		---	Retained	Cleared	---	---
A532	All	Interrupt Counter 0 Counter SV	Used for interrupt input 0 in counter mode. Sets the count value at which the interrupt task will start. Interrupt task 140 will start when interrupt counter 0 has counted this number of pulses. Retained when operation starts.	---	Retained	Retained	---	---
A533	All	Interrupt Counter 1 Counter SV	Used for interrupt input 1 in counter mode. Sets the count value at which the interrupt task will start. Interrupt task 141 will start when interrupt counter 1 has counted this number of pulses.	---	Retained	Retained	---	---
A534	All	Interrupt Counter 2 Counter SV	Used for interrupt input 2 in counter mode. Sets the count value at which the interrupt task will start. Interrupt task 142 will start when interrupt counter 2 has counted this number of pulses.	---	Retained	Retained	---	---
A535	All	Interrupt Counter 3 Counter SV	Used for interrupt input 3 in counter mode. Sets the count value at which the interrupt task will start. Interrupt task 143 will start when interrupt counter 3 has counted this number of pulses.	---	Retained	Retained	---	---
A536	All	Interrupt Counter 0 Counter PV	These words contain the interrupt counter PVs for interrupt inputs operating in counter mode. In increment mode, the counter PV starts incrementing from 0. When the counter PV reaches the counter SV, the PV is automatically reset to 0. In decrement mode, the counter PV starts decrementing from the counter SV. When the counter PV reaches the 0, the PV is automatically reset to the SV. Cleared when operation starts.	---	---	Retained	Refreshed when interrupt is generated. Refreshed when INI(880) instruction is executed.	---
A537	All	Interrupt Counter 1 Counter PV		---	---			---
A538	All	Interrupt Counter 2 Counter PV		---	---			---
A539	All	Interrupt Counter 3 Counter PV		---	---			---
A540	A540.00	Pulse Output 0 Reset Bit	The pulse output 0 PV (contained in A276 and A277) will be cleared when this bit is turned ON.	---	Retained	Cleared	---	A276 and A277
	A540.08	Pulse Output 0 CW Limit Input Signal Flag	This is the CW limit input signal for pulse output 0, which is used in the origin search. To use this signal, write the input from the actual sensor as an input condition in the ladder program and output the result to this flag.	---	Retained	Cleared	---	---
	A540.09	Pulse Output 0 CCW Limit Input Signal Flag	This is the CCW limit input signal for pulse output 0, which is used in the origin search. To use this signal, write the input from the actual sensor as an input condition in the ladder program and output the result to this flag.	---	Retained	Cleared	---	---

Addresses		Name	Function	Settings	Status after mode change	Status at startup	Write timing	Related Flags, Settings
Word	Bits							
A540	A540.10	Pulse Output 0 Positioning Completed Signal	This is the positioning completed input signal used in the origin search for pulse output 0. The input signal from the servo driver is output to this bit from the ladder program to enable using the signal.	---	Retained	Cleared		---
A541	A541.00	Pulse Output 1 Reset Bit	The pulse output 1 PV (contained in A278 and A279) will be cleared when this bit is turned ON.	---	Retained	Cleared	---	A278 and A279
	A541.08	Pulse Output 1 CW Limit Input Signal Flag	This is the CW limit input signal for pulse output 1, which is used in the origin search. To use this signal, write the input from the actual sensor as an input condition in the ladder program and output the result to this flag.	---	Retained	Cleared	---	---
	A541.09	Pulse Output 1 CCW Limit Input Signal Flag	This is the CCW limit input signal for pulse output 1, which is used in the origin search. To use this signal, write the input from the actual sensor as an input condition in the ladder program and output the result to this flag.	---	Retained	Cleared	---	---
	A541.10	Pulse Output 1 Positioning Completed Signal	This is the positioning completed input signal used in the origin search for pulse output 1. The input signal from the servo driver is output to this bit from the ladder program to enable using the signal.	---	Retained	Cleared	---	---
A562	A562.00	Error Counter 0 Reset Bit	Turn ON this bit to reset the Error Counter 0 Present Value and turn OFF the Error Counter 0 Error Flag.	---	---	Cleared	---	---
	A562.01	Error Counter 0 Disable Bit	Turn ON this bit to hold the present value of error counter 0.	ON: Error counter value held. OFF: Error counter value not held.	---	Cleared	---	---
A563	A563.00	Error Counter 1 Reset Bit	Turn ON this bit to reset the Error Counter 1 Present Value and turn OFF the Error Counter 0 Error Flag.	---	---	Cleared	---	---
	A563.01	Error Counter 1 Disable Bit	Turn ON this bit to hold the present value of error counter 1.	ON: Error counter value held. OFF: Error counter value not held.	---	Cleared	---	---
A580	A580.00 to A580.03	FB Communications Instruction Retries	Automatically stores the number of retries in the FB communications instruction settings specified in the PLC Setup.	0 to F hex	---	Cleared	Written at start of operation	
A581	All	FB Communications Instruction Response Monitoring Time	Automatically stores the FB communications instruction response monitoring time set in the PLC Setup.	0001 to FFFF hex (Unit: 0.1 s; Range: 0.1 to 6553.5) 0000 hex: 2 s	---	Cleared	Written at start of operation	---

Addresses		Name	Function	Settings	Status after mode change	Status at startup	Write timing	Related Flags, Settings
Word	Bits							
A598	A598.00	FPD Teaching Bit	Turn this bit ON to set the monitoring time automatically with the teaching function. While A598.00 is ON, FPD(269) measures how long it takes for the diagnostic output to go ON after the execution condition goes ON. If the measured time exceeds the monitoring time, the measured time is multiplied by 1.5 and that value is stored as the new monitoring time. (The teaching function can be used only when a word address has been specified for the monitoring time operand.)	ON: Teach monitoring time OFF: Teaching function OFF	Cleared	Cleared	---	---
A600 to A603	All	Macro Area Input Words	Before the subroutine specified in MCRO(099) is executed, the source words for the subroutine are transferred to A600 through A603 (input parameter words).	Input data: 4 words	Cleared	Cleared	---	---
A604 to A607	All	Macro Area Output Words	After the subroutine specified in MCRO(099) has been executed, the results of the subroutine are transferred from A604 through A607 to the specified destination words (output parameter words).	Output data: 4 words	Cleared	Cleared	---	---
A619	A619.01	Serial Port 1 Settings Changing Flag (CP1L M-type CPU Units)	ON while the serial port 1's communications settings are being changed for a CP1L M-type CPU Unit. This flag will be turned ON when STUP(237) is executed and it will be turned OFF after the settings have been changed.	ON: Changing OFF: Not changing	Retained	Cleared	---	---
	A619.02	Serial Port 2 Settings Changing Flag (CP1L M-type CPU Units)	ON while the serial port 2's communications settings are being changed for a CP1L M-type CPU Unit. This flag will be turned ON when STUP(237) is executed and it will be turned OFF after the settings have been changed.	ON: Changing OFF: Not changing	Retained	Cleared	---	---
		Serial Port 1 Settings Changing Flag (CP1L L-type CPU Units)	ON while the serial port 1's communications settings are being changed for a CP1L L-type CPU Unit. This flag will be turned ON when STUP(237) is executed and it will be turned OFF after the settings have been changed.					

Addresses		Name	Function	Settings	Status after mode change	Status at startup	Write timing	Related Flags, Settings
Word	Bits							
A640	A640.00	Serial Port 2 Modbus-RTU Easy Master Execution Bit (CP1L M-type CPU Units)	Turn ON this bit to send a command and receive a response for serial port 2 of a CP1L M-type CPU Unit using the Modbus-RTU easy master function. **Note** This bit will be turned OFF automatically by the system when communications have been completed.	Turned ON: Execution started ON: Execution in progress. OFF: Not executed or execution completed.	Retained	Cleared	---	DM fixed allocation words for Modbus-RTU Easy Master: D32300 to D32399
		Serial Port 1 Modbus-RTU Easy Master Execution Bit (CP1L L-type CPU Units)	Turn ON this bit to send a command and receive a response for serial port 1 of a CP1L L-type CPU Unit using the Modbus-RTU easy master function. **Note** This bit will be turned OFF automatically by the system when communications have been completed.					
	A640.01	Serial Port 2 Modbus-RTU Easy Master Normal End Flag (CP1L M-type CPU Units)	ON when one command has been sent and the response received for serial port 2 of a CP1L M-type CPU Unit using the Modbus-RTU easy master function.	ON: Execution normal. OFF: Execution error or still in progress.	Retained	Cleared	---	
		Serial Port 1 Modbus-RTU Easy Master Normal End Flag (CP1L L-type CPU Units)	ON when one command has been sent and the response received for serial port 1 of a CP1L L-type CPU Unit using the Modbus-RTU easy master function.					
	A640.02	Serial Port 2 Modbus-RTU Easy Master Error End Flag (CP1L M-type CPU Units)	ON when an error has occurred in communications for serial port 2 of a CP1L M-type CPU Unit using the Modbus-RTU easy master function. The error code is output to D32252 in the DM fixed allocation words for Modbus-RTU Easy Master.	ON: Execution error. OFF: Execution normal or still in progress.	Retained	Cleared	---	
		Serial Port 1 Modbus-RTU Easy Master Error End Flag (CP1L L-type CPU Units)	ON when an error has occurred in communications for serial port 1 of a CP1L L-type CPU Unit using the Modbus-RTU easy master function. The error code is output to D32252 in the DM fixed allocation words for Modbus-RTU Easy Master.					

Addresses		Name	Function	Settings	Status after mode change	Status at startup	Write timing	Related Flags, Settings
Word	Bits							
A641	A641.00	Serial Port 1 Modbus-RTU Master Execution Bit (CP1L M-type CPU Units)	Turn ON this bit to send a command and receive a response for serial port 1 of a CP1L M-type CPU Unit using the Modbus-RTU easy master function. This bit will be turned OFF automatically by the system when communications have been completed.	Turned ON: Execution started ON: Execution in progress. OFF: Not executed or execution completed.	Retained	Cleared	---	DM fixed allocation words for Modbus-RTU Easy Master: D32200 to D32299
	A641.01	Serial Port 1 Modbus-RTU Master Execution Normal Flag (CP1L M-type CPU Units)	ON when one command has been sent and the response received for serial port 1 of a CP1L M-type CPU Unit using the Modbus-RTU easy master function.	ON: Execution normal. OFF: Execution error or still in progress.	Retained	Cleared	---	
	A641.02	Serial Port 1 Modbus-RTU Master Execution Error Flag (CP1L M-type CPU Units)	ON when an error has occurred in communications for serial port 1 of a CP1L M-type CPU Unit using the Modbus-RTU easy master function. The error code is output to D32352 in the DM fixed allocation words for Modbus-RTU Easy Master.	ON: Execution error. OFF: Execution normal or still in progress.	Retained	Cleared	---	
A642	All	Analog Adjustment PV	Stores the value set on the analog adjuster as a hexadecimal value (resolution: 1/256).	0000 to 00FF hex	Retained	Cleared	---	---
A643	All	External Analog Setting Input PV	Stores the value set from the external analog setting input as a hexadecimal value (resolution: 1/256).	0000 to 00FF hex	Retained	Cleared	---	---
A720 to A722	All	Power ON Clock Data 1	These words contain the time at which the power was turned ON one time before the startup time stored in words A510 to A511. A720.00 to A720.07: Seconds (00 to 59) A720.08 to A720.15: Minutes (00 to 59) A721.00 to A721.07: Hour (00 to 23) A721.08 to A721.15: Day of month (00 to 31) A722.00 to A722.07: Month (01 to 12) A722.08 to A722.15: Year (00 to 99)	See at left.	Retained	Retained	Written when power is turned ON.	
A723 to A725	All	Power ON Clock Data 2	These words contain the time at which the power was turned ON two times before the startup time stored in words A510 to A511. A723.00 to A723.07: Seconds (00 to 59) A723.08 to A723.15: Minutes (00 to 59) A724.00 to A724.07: Hour (00 to 23) A724.08 to A724.15: Day of month (00 to 31) A725.00 to A725.07: Month (01 to 12) A725.08 to A725.15: Year (00 to 99)	See at left.	Retained	Retained	Written when power is turned ON.	
A726 to A728	All	Power ON Clock Data 3	These words contain the time at which the power was turned ON three times before the startup time stored in words A510 to A511. A726.00 to A726.07: Seconds (00 to 59) A726.08 to A726.15: Minutes (00 to 59) A727.00 to A727.07: Hour (00 to 23) A727.08 to A727.15: Day of month (00 to 31) A728.00 to A728.07: Month (01 to 12) A728.08 to A728.15: Year (00 to 99)	See at left.	Retained	Retained	Written when power is turned ON.	

Addresses		Name	Function	Settings	Status after mode change	Status at startup	Write timing	Related Flags, Settings
Word	Bits							
A729 to A731	All	Power ON Clock Data 4	These words contain the time at which the power was turned ON four times before the startup time stored in words A510 to A511. A729.00 to A729.07: Seconds (00 to 59) A729.08 to A729.15: Minutes (00 to 59) A730.00 to A730.07: Hour (00 to 23) A730.08 to A730.15: Day of month (00 to 31) A731.00 to A731.07: Month (01 to 12) A731.08 to A731.15: Year (00 to 99)	See at left.	Retained	Retained	Written when power is turned ON.	
A732 to A734	All	Power ON Clock Data 5	These words contain the time at which the power was turned ON five times before the startup time stored in words A510 to A511. A732.00 to A732.07: Seconds (00 to 59) A732.08 to A732.15: Minutes (00 to 59) A733.00 to A733.07: Hour (00 to 23) A733.08 to A733.15: Day of month (00 to 31) A734.00 to A734.07: Month (01 to 12) A734.08 to A734.15: Year (00 to 99)	See at left.	Retained	Retained	Written when power is turned ON.	
A735 to A737	All	Power ON Clock Data 6	These words contain the time at which the power was turned ON six times before the startup time stored in words A510 to A511. A735.00 to A735.07: Seconds (00 to 59) A735.08 to A735.15: Minutes (00 to 59) A736.00 to A736.07: Hour (00 to 23) A736.08 to A736.15: Day of month (00 to 31) A737.00 to A737.07: Month (01 to 12) A737.08 to A737.15: Year (00 to 99)	See at left.	Retained	Retained	Written when power is turned ON.	
A738 to A740	All	Power ON Clock Data 7	These words contain the time at which the power was turned ON seven times before the startup time stored in words A510 to A511. A738.00 to A738.07: Seconds (00 to 59) A738.08 to A738.15: Minutes (00 to 59) A739.00 to A739.07: Hour (00 to 23) A739.08 to A739.15: Day of month (00 to 31) A740.00 to A740.07: Month (01 to 12) A740.08 to A740.15: Year (00 to 99)	See at left.	Retained	Retained	Written when power is turned ON.	
A741 to A743	All	Power ON Clock Data 8	These words contain the time at which the power was turned ON eight times before the startup time stored in words A510 to A511. A741.00 to A741.07: Seconds (00 to 59) A741.08 to A741.15: Minutes (00 to 59) A742.00 to A742.07: Hour (00 to 23) A742.08 to A742.15: Day of month (00 to 31) A743.00 to A743.07: Month (01 to 12) A743.08 to A743.15: Year (00 to 99)	See at left.	Retained	Retained	Written when power is turned ON.	

Addresses		Name	Function	Settings	Status after mode change	Status at startup	Write timing	Related Flags, Settings
Word	Bits							
A744 to A746	All	Power ON Clock Data 9	These words contain the time at which the power was turned ON nine times before the startup time stored in words A510 to A511. A744.00 to A744.07: Seconds (00 to 59) A744.08 to A744.15: Minutes (00 to 59) A745.00 to A745.07: Hour (00 to 23) A745.08 to A745.15: Day of month (00 to 31) A746.00 to A746.07: Month (01 to 12) A746.08 to A746.15: Year (00 to 99)	See at left.	Retained	Retained	Written when power is turned ON.	
A747 to A749	All	Power ON Clock Data 10	These words contain the time at which the power was turned ON ten times before the startup time stored in words A510 to A511. A747.00 to A747.07: Seconds (00 to 59) A747.08 to A747.15: Minutes (00 to 59) A748.00 to A748.07: Hour (00 to 23) A748.08 to A748.15: Day of month (00 to 31) A749.00 to A749.07: Month (01 to 12) A749.08 to A749.15: Year (00 to 99)	See at left.	Retained	Retained	Written when power is turned ON.	
A751	A751.11	DM Initial Values Read Error Flag	ON when an error occurred in transferring DM initial values from the DM initial value area in flash memory to the DM Area.	OFF: Normal ON: Error (failed to load)	Retained	Cleared	---	---
	A751.12	DM Initial Values Save Execution Error Flag	ON when the DM Initial Values Transfer Password (A752) is incorrect or when the DM Initial values area was not specified when starting to transfer DM initial values from the DM Area to the DM initial value area in flash memory.	OFF: Normal ON: Error (failed to save)	Retained	Cleared	---	---
	A751.13	DM Initial Values Save Error Flag	ON when an error occurred in transferring DM initial values from the DM Area to the DM initial value area in flash memory.	OFF: Normal ON: Error (failed to save)	Retained	Cleared	---	---
	A751.14	DM Initial Values Save Flag	ON while DM initial values are being transferred from the DM Area to the DM initial value area in flash memory. OFF when the transfer has been completed.	OFF: Not being saved ON: Being saved	Retained	Cleared	---	---
	A751.15	DM Initial Values Save Start Bit	Turn ON this bit to start transferring DM initial values. This bit is valid only when a correct password is stored in A752 and the DM Area Initial Value Area is specified (i.e., when A753.00 is ON). The system will turn this bit OFF automatically when the transfer has been completed.	Turned ON: Transfer started OFF: Not transferring ON: Transferring	Retained	Cleared	---	---
A752	All	DM Initial Values Save Password	Set the passwords here to transfer DM initial values between the DM area and the DM initial value area in flash memory. The transfer will not be started unless the correct password is set. The transfer is started when A751.15 is turned ON. The password will be cleared by the system when the transfer has been completed.	A5A5 hex: Save initial values from DM to flash	Retained	Cleared	---	---
A753	All	DM Initial Values Save Area Specification	Specifies the area to be transferred to flash memory.	0001 hex: DM Area specified	Retained	Cleared	---	---

Note The following flags are provided in a special read-only area and can be specified with the labels given in the table. These flags are not contained in the Auxiliary Area. Refer to *4-14 Condition Flags* and *4-15 Clock Pulses* for details.

Flag area	Name	Label	Meaning
Condition Code Area	Error Flag	**ER**	Turns ON when an error occurs in processing an instructions, indicating an error end to the instruction.
	Access Error Flag	**AER**	Turns ON when an attempt is made to access an illegal area. The status of this flag is maintain only during the current cycle and only in the task in which it occurred.
	Carry Flag	**CY**	Turns ON when there is a carry or borrow in a math operation, when a bit is shifted into the Carry Flag, etc.
	Greater Than Flag	**>**	Turns ON when the result of comparing two values is "greater than," when a value exceeds a specified range, etc.
	Equals Flag	**=**	Turns ON when the result of comparing two values is "equals," when the result of a math operation is 0, etc.
	Less Than Flag	**<**	Turns ON when the result of comparing two values is "less than," when a value is below a specified range, etc.
	Negative Flag	**N**	Turns ON when the MSB in the result of a math operation is 1.
	Overflow Flag	**OF**	Turns ON when the result of a math operation overflows.
	Underflow Flag	**UF**	Turns ON when the result of a math operation underflows.
	Greater Than or Equals Flag	**>=**	Turns ON when the result of comparing two values is "greater than or equals."
	Not Equal Flag	**<>**	Turns ON when the result of comparing two values is "not equal."
	Less than or Equals Flag	**<=**	Turns ON when the result of comparing two values is "less than or equals."
	Always ON Flag	**A1**	This flag is always ON.
	Always OFF Flag	**A0**	This flag is always OFF.
Clock Pulse Area	0.02-s clock pulse	**0.02s**	Repeatedly turns ON for 0.02 s and OFF for 0.02 s.
	0.1-s clock pulse	**0.1s**	Repeatedly turns ON for 0.1 s and OFF for 0.1 s.
	0.2-s clock pulse	**0.2s**	Repeatedly turns ON for 0.2 s and OFF for 0.2 s.
	1-s clock pulse	**1s**	Repeatedly turns ON for 1 s and OFF for 1 s.
	1-min clock pulse	**1min**	Repeatedly turns ON for 1 min and OFF for 1 min.

Details on Auxiliary Area Operation

A100 to A199: Error Log Area

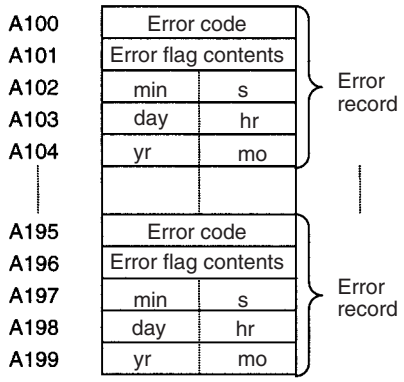

The following data would be generated in an error record if a memory error (error code 80F1) occurred on 1 April 1998 at 17:10:30 with the error located in the PLC Setup (04 hex).

80	F1
00	04
10	30
01	17
98	04

The following data would be generated in an error record if an FALS error with FALS number 001 occurred on 2 May 1997 at 8:30:15.

C1	01
00	00
30	15
02	08
97	05

Error Codes and Error Flags

Classification	Error code	Meaning	Error flags
System-defined fatal errors	80F1	Memory error	A403
	80CA	I/O bus error	A404
	80E9	Duplicate number error	A410, A411 to 416 (See note 3.)
	80E1	Too many I/O error	A407
	80E0	I/O setting error	---
	80F0	Program error	A295 to A299 (See note 4.)
	809F	Cycle time too long error	---
User-defined fatal errors	C101 to C2FF	FALS instruction executed (See note 1.)	---
User-defined non-fatal errors	4101 to 42FF	FAL instruction executed (See note 2.)	---
System-defined non-fatal errors	008B	Interrupt task error	A426
	009A	Basic I/O error	A408
	009B	PLC Setup setting error	A406
	0200 to 020F	CPU Bus Unit error	A417
	0300 to 035F	Special I/O Unit error	A418 to A423 (See note 5.)
	00F7	Battery error	---
	0400 to 040F	CPU Bus Unit setup error	A427
	0500 to 055F	Special I/O Unit setup error	A428 to A433 (See note 5.)

Note 1. C101 to C2FF will be stored for FALS numbers 001 to 511.
2. 4101 to 42FF will be stored for FAL numbers 001 to 511.
3. Only the contents of A295 is stored as the error flag contents for program errors.

A200.11: First Cycle Flag

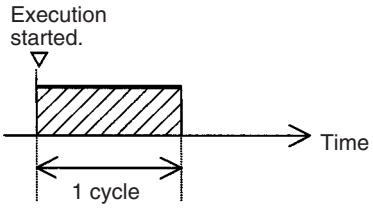

A200.15: Initial Task Flag

A200.15 will turn ON during the first time a task is executed after it has reached executable status. It will be ON only while the task is being executed and will not turn ON if following cycles.

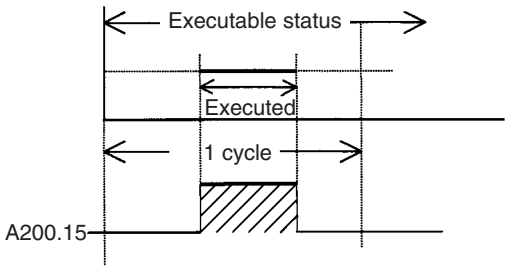

A201.10: Online Editing Wait Flag

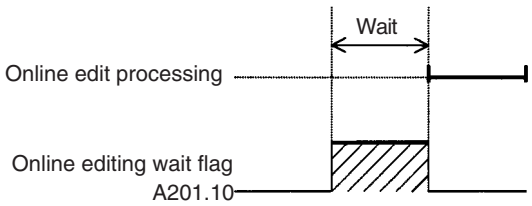

A202.00 to A202.07: Communications Port Enabled Flags

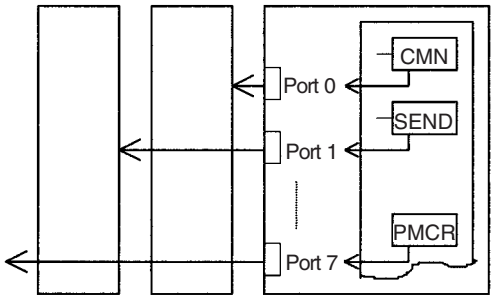

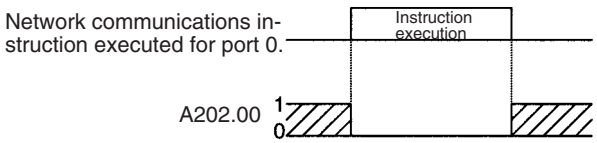

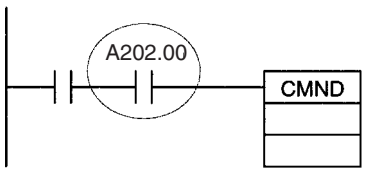

The program is designed so that CMND(490) will be executed only when A202.00 is ON.

A300: Error Record Pointer

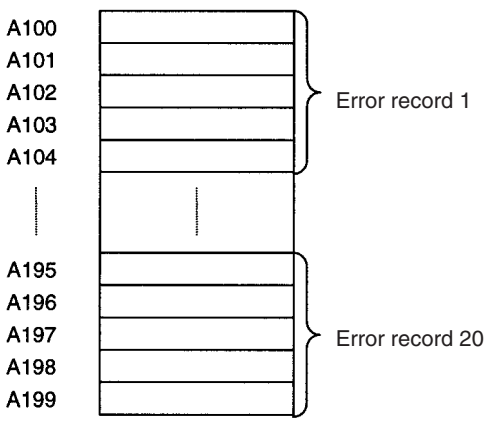

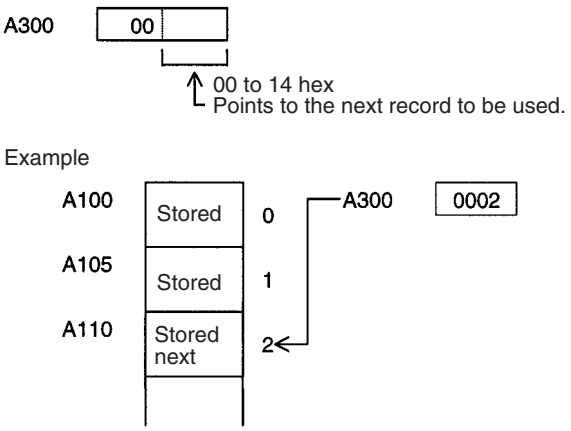

A401.09: Program Error Flag

	Error	Address
Program Error Flag (A401.09): ON	UM Overflow Error Flag	A295.15
	Illegal Instruction Flag	A295.14
	Distribution Overflow Error Flag	A295.13
	Task Error Flag	A259.12
	No END(001) Error Flag	A295.11
	Illegal Area Access Error Flag	A295.10
	Indirect DM Addressing Error Flag	A295.09
	Instruction Processing Error Flag (ER Flag goes ON)	A295.08

Appendix E
Memory Map

PLC Memory Addresses

PLC memory addresses are set in Index Registers (IR00 to IR15) to indirectly address I/O memory. Normally, use the MOVE TO REGISTER (MOVR(560)) and MOVE TIMER/COUNTER PV TO REGISTER (MOVRW(561)) instructions to set PLC memory addresses into the Index Registers.

Some instructions, such as DATA SEARCH (SRCH(181)), FIND MAXIMUM (MAX(182)), and FIND MINIMUM (MIN(183)), output the results of processing to an Index Register to indicate an PLC memory address.

There are also instructions for which Index Registers can be directly designated to use the PLC memory addresses stored in them by other instructions. These instructions include DOUBLE MOVE (MOVL(498)), some symbol comparison instructions (=L, <>L, <L, >L, <=L, and >=L), DOUBLE COMPARE (CMPL(060)), DOUBLE DATA EXCHANGE (XCGL(562)), DOUBLE INCREMENT BINARY (++L(591)), DOUBLE DECREMENT BINARY (—L(593)), DOUBLE SIGNED BINARY ADD WITHOUT CARRY (+L(401)), DOUBLE SIGNED BINARY SUBTRACT WITHOUT CARRY (–L(411)), SET RECORD LOCATION (SETR(635)), and GET RECORD LOCATION (GETR(636)).

The PLC memory addresses all are continuous and the user must be aware of the order and boundaries of the memory areas. As reference, the PLC memory addresses are provided in a table at the end of this appendix.

Note Directly setting PLC memory addresses in the program should be avoided whenever possible. If PLC memory addresses are set in the program, the program will be less compatible with new CPU Unit models or CPU Units for which changes have been made to the layout of the memory.

Memory Configuration

There are two classifications of the RAM memory (with battery backup) in a CP-series CPU Unit.

Parameter Areas: These areas contain CPU Unit system setting data, such as the PLC Setup, CPU Bus Unit Setups, etc. An illegal access error will occur if an attempt is made to access any of the parameter areas from an instruction in the user program.

I/O Memory Areas: These are the areas that can be specified as operands in the instructions in user programs.

Memory Map

Note Do not access the areas indicated *Reserved for system.*

Classification	PLC memory addresses (hex)	User addresses	Area
I/O memory areas	0B100 to 0B7FF	---	Reserved for system.
	0B800 to 0B801	TK00 to TK31	Task Flag Area
	0B802 to 0B83F	---	Reserved for system.
	0B840 to 0B9FF	A0 to A447	Read-only Auxiliary Area
	0BA00 to 0BBFF	A448 to A959	Read/Write Auxiliary Area
	0BC00 to 0BDFF	---	Reserved for system.
	0BE00 to 0BEFF	T0000 to T4095	Timer Completion Flags
	0BF00 to 0BFFF	C0000 to C4095	Counter Completion Flags
	0C000 to 0D7FF	CIO 0 to CIO 6143	CIO Area
	0D800 to 0D9FF	H0 to H511	Holding Area
	0DA00 to 0DDFF	---	Reserved for system.
	0DE00 to 0DFFF	W0 to W511	Work Area
	0E000 to 0EFFF	T0000 to T4095	Timer PVs
	0F000 to 0FFFF	C0000 to C4095	Counter PVs
	10000 to 17FFF	D0 to D32767	DM Area (See note 2.)
	18000 to FFFFF	---	Reserved for system.

Note (1) Do not access areas reserved for the system.

(2) D10000 to D31999 (PLC memory addresses 12710 to 17CFF hex) cannot be used with CPU Units with 10, 14 or 20 I/O Points.

Appendix F
Connections to Serial Communications Option Boards

Connection Methods

Communications Modes and Ports

The following table shows the relationship between the communications ports and the communications modes for the Serial Communications Option Boards.

Communications mode	RS-232C CP1W-CIF01		RS-422A/485 CP1W-CIF11/CIF12			
	1:1	1:N (See note 1.)	1:1 4-wire	1:N 4-wire	1:1 2-wire	1:N 2-wire
Host Link	YES	YES (See note 2.)	YES	YES	No	No
Serial PLC Links	YES	YES	YES	YES	YES	YES
Serial Gateway	YES	YES	YES	YES	YES	YES
No-protocol	YES	YES	YES	YES	YES	YES
1:N NT Link	YES	YES	YES	YES	YES	YES
1:1 NT Link	YES	No	YES	No	YES	No
1:1 Link Master	YES	No	YES	No	YES	No
1:1 Link Slave	YES	No	YES	No	YES	No

Note (1) The NT-AL001 Link Adapter can be used to convert between RS-232C and RS-422A/485 to enable 1:N communications.

(2) Use 4-wire connections between Link Adapters.

Models of Serial Communications Option Board

Model	Port	Maximum transmission distance	Connection method
CP1W-CIF01	One RS-232C port	15 m	Connector (D-sub, 9-pin female)
CP1W-CIF11	One RS-422A/485 port	50 m (See note.)	Terminal block (using ferrules)
CP1W-CIF12	One RS-422A/485 port	500 m	Terminal block (using ferrules)

Note The CP1W-CIF11 is a non-isolated board, so the maximum transmission distance is 50 m. For distances over 50 m, use the RS-232C port on the CP1W-CIF01 and then connect through the NT-AL001 Link Adapter, which is isolated. Doing so will enable a maximum transmission distance of 500 m.

Reducing Electrical Noise for External Wiring

Observe the following precautions when wiring communications cables, PLC power lines, and high-power lines. When multi-conductor signal cable is being used, avoid using I/O wires and other control wires in the same cable.

- If wiring racks are running in parallel, allow at least 300 mm between them.

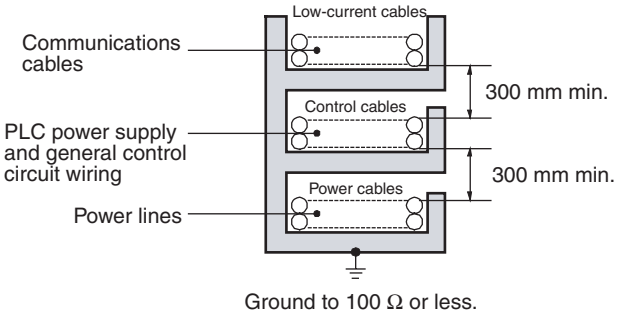

- If the I/O wiring and power cables must be placed in the same duct, they must be shielded from each other using grounded steel sheet metal.

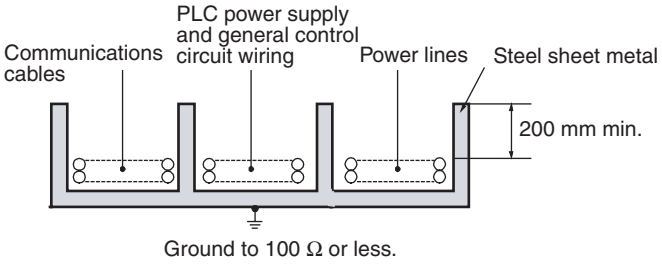

2-Wire and 4-Wire Connections

The transmission circuits for 2-wire and 4-wire connections are different, as shown in the following diagram.

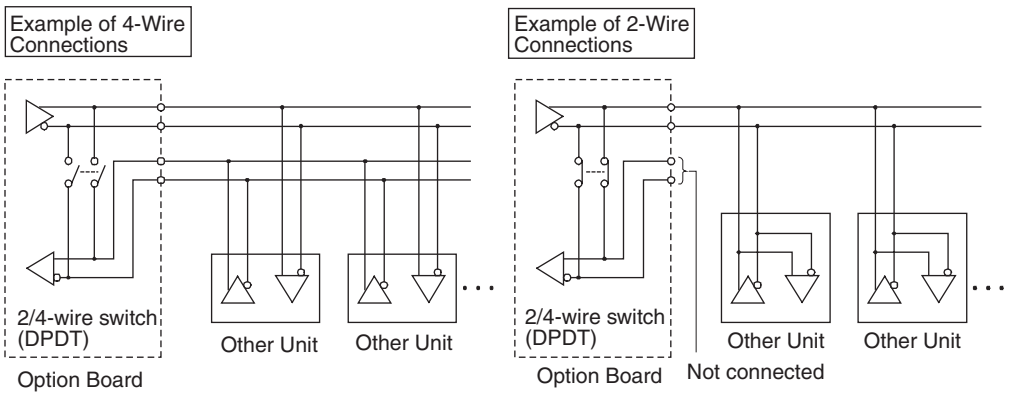

Note (1) Use the same transmission circuit (2-wire or 4-wire) for all nodes.

(2) Do not use 4-wire connections when the 2/4-wire switch on the Board is set to 2-wire.

NT-AL001 Link Adapter Settings

The NT-AL001 Link Adapter has a DIP switch for setting RS-422A/485 communications conditions. When connecting the Serial Communications Option Board, refer to the DIP switch settings shown in the following table.

Pin	Function	Factory setting
1	Not used. Always set this pin to ON.	ON
2	Built-in terminating resistance setting ON: Connects terminating resistance. OFF: Disconnects terminating resistance.	ON
3	2/4-wire setting	OFF
4	2-wire: Set both pins to ON. 4-wire: Set both pins to OFF.	OFF
5	Transmission mode (See note.) Constant transmission: Set both pins to OFF. Transmission performed when CTS signal in RS-232C interface is at high level: Set pin 5 to OFF and pin 6 to ON.	ON
6	Transmission performed when CTS signal in RS-232C interface is at low level: Set pin 5 to ON and pin 6 to OFF.	OFF

Note When connecting to a CP-series CPU Unit, turn OFF pin 5 and turn ON pin 6.

Connections for Host Link Communications

Port connections for Host Link communications are shown in the following table. Up to 32 nodes can be connected for 1:N connections.

Port	Configuration	Schematic diagram, RS-232C ports	Schematic diagram, RS-422A/485 ports
Computer to PLC: C-mode or FINS commands PLC to computer: FINS commands	1:1	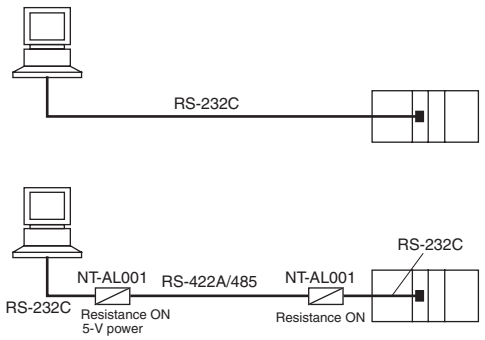	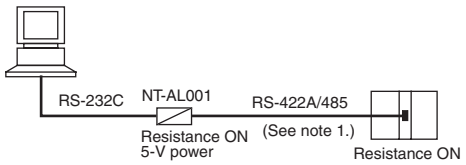
Computer to PLC: C-mode or FINS commands	1:N	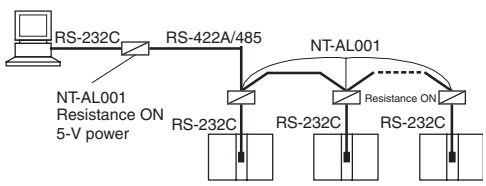	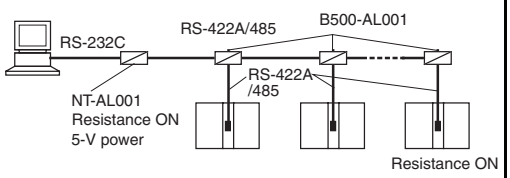

Note (1) Four-wire connections must be used for RS-422A/485 connections with Host Link communications.

(2) "Resistance ON" indicates the terminating resistance must be turned ON.

(3) "5-V power" indicates that a 5-V power supply is required for the Link Adapter. Refer to the Link Adapter manual for details. A 5-V power supply is not required for a Link Adapter connected to an RS-232C Option Board mounted on the CPU Unit because power is supplied from pin 6 of the connector.

(4) The maximum cable length for RS-232C is 15 m. The RS-232C standard, however, does not cover baud rates above 19.2 Kbps. Refer to the manual for the device being connected to confirm support.

Connection Examples

The connection examples in the remainder of this section show only the basic connection diagrams. We recommend that appropriate noise countermeasures be taken in actual applications, including the use of shielded twisted-pair cables. Refer to *Recommended RS-422A/485 Wiring Examples* on page 735 for actual wiring methods.

Host Computer Connections

1:1 Connections Using RS-232C Ports

- IBM PC/AT or Compatible Computers

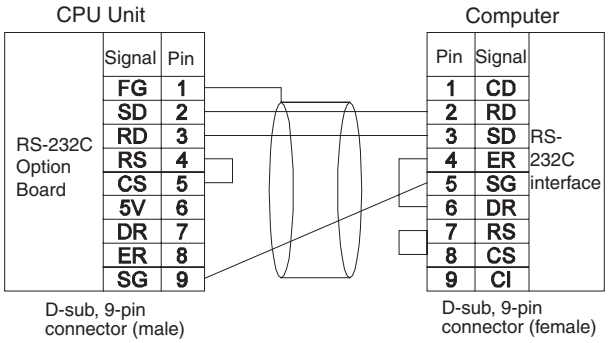

- Using NT-AL001 Converting Link Adapters

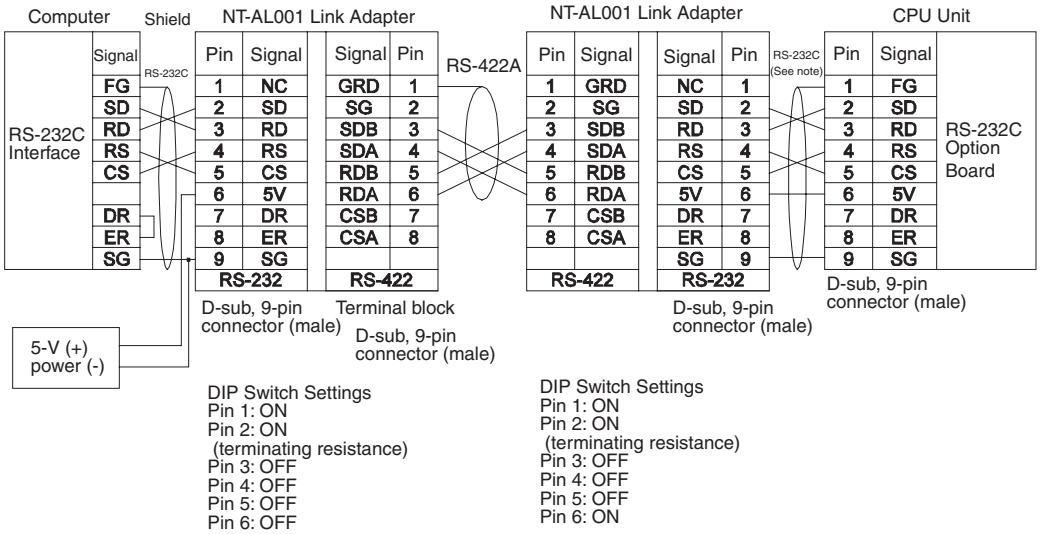

Note We recommend using the following NT-AL001 Link Adapter Connecting Cables to connect to NT-AL001 Link Adapters.
XW2Z-070T-1: 0.7 m
XW2Z-200T-1: 2 m

⚠ **Caution** Do not use the 5-V power from pin 6 of the RS-232C Option Board for anything but the NT-AL001 Link Adapter. Using this power supply for any other external device may damage the RS-232C Option Board or the external device.

1:N Connections Using RS-232C Ports

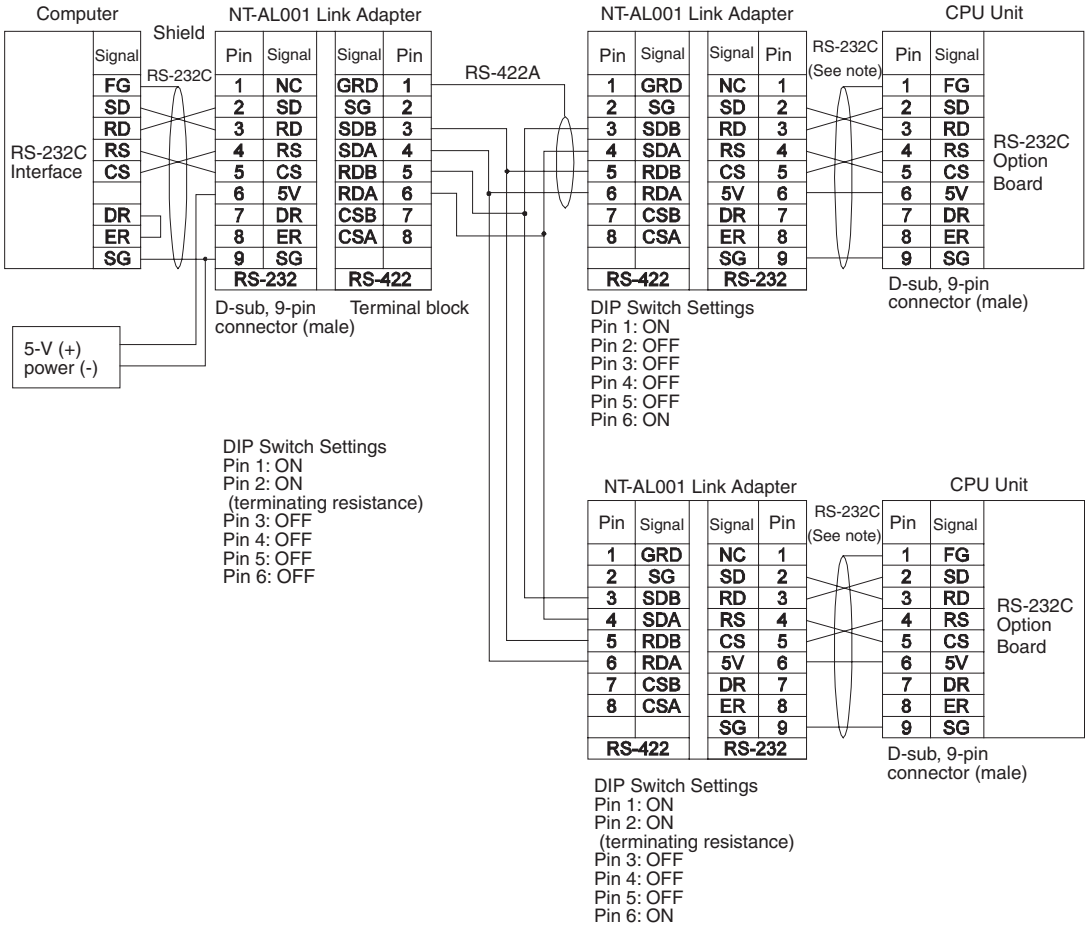

Note We recommend using the following NT-AL001 Link Adapter Connecting Cables to connect to NT-AL001 Link Adapters.
XW2Z-070T-1: 0.7 m
XW2Z-200T-1: 2 m

1:1 Connections Using RS-422A/485 Port

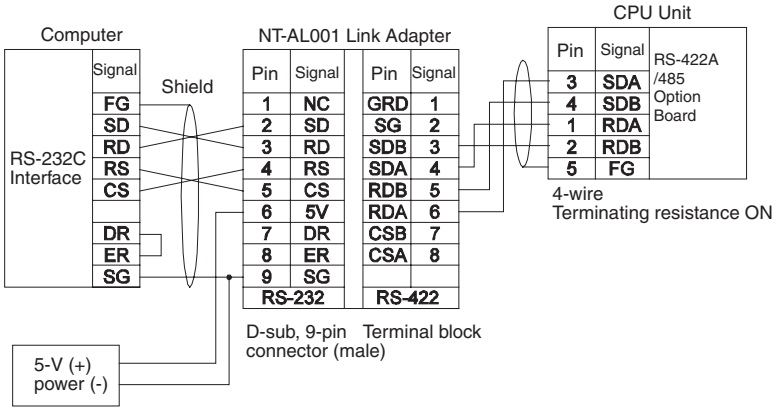

DIP Switch Settings
Pin 1: ON
Pin 2: ON
(terminating resistance)
Pin 3: OFF
Pin 4: OFF
Pin 5: OFF
Pin 6: OFF

1:N Connections Using RS-422A/485 Ports

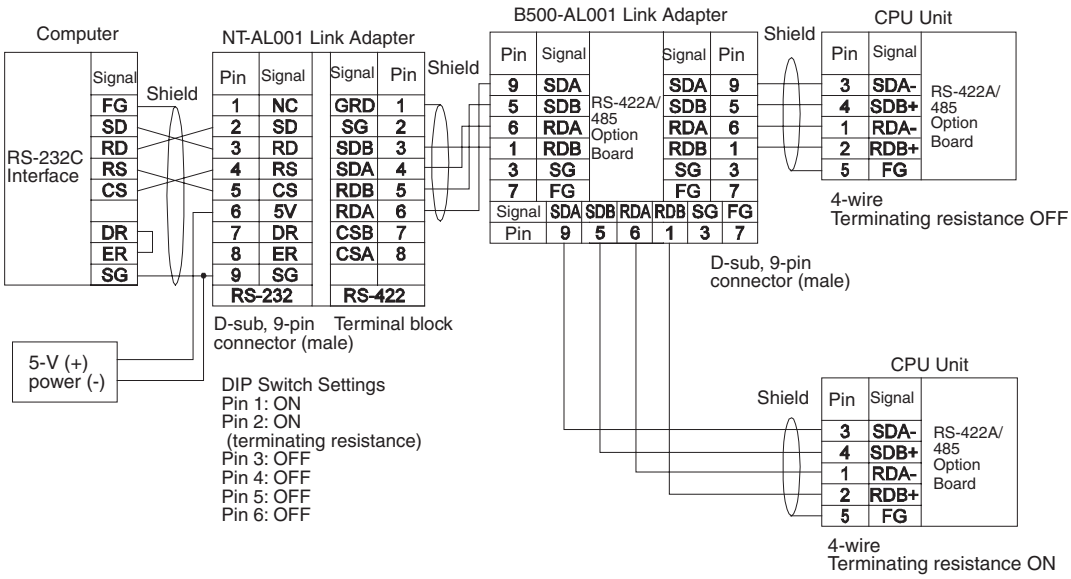

DIP Switch Settings
Pin 1: ON
Pin 2: ON
(terminating resistance)
Pin 3: OFF
Pin 4: OFF
Pin 5: OFF
Pin 6: OFF

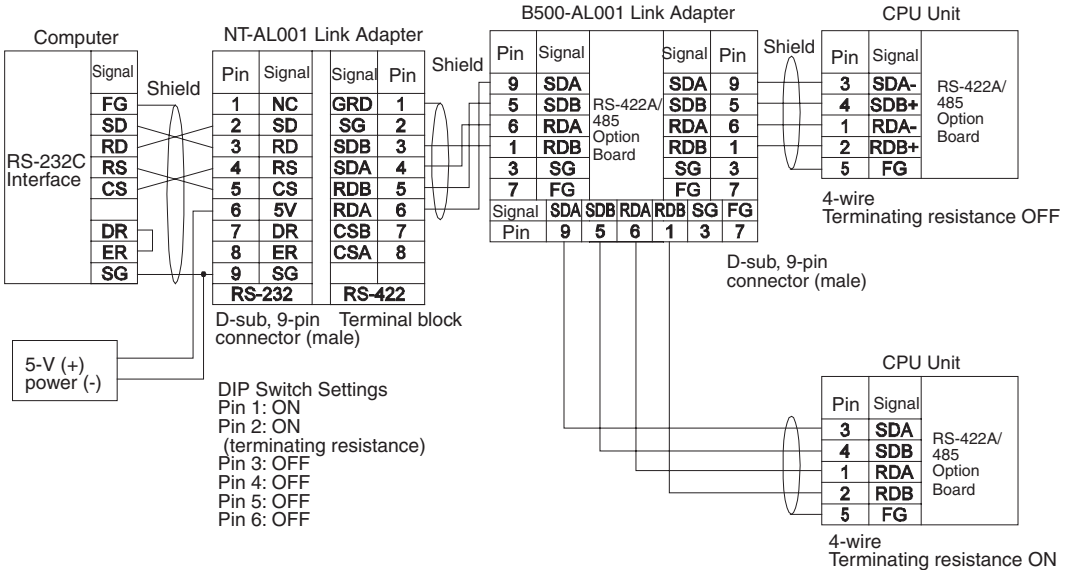

Programmable Terminal (PT) Connections

Direct Connections from RS-232C to RS-232C Ports

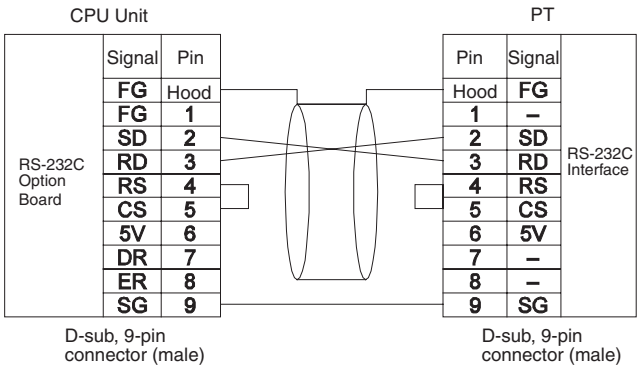

- Communications Mode: Host Link (unit number 0 only for Host Link)
  NT Link (1:N, N = 1 Unit only)
- OMRON Cables with Connectors:
  XW2Z-200T-1: 2 m
  XW2Z-500T-1: 5 m

1:1 Connections from RS-422A/485 to RS-422A/485 Ports

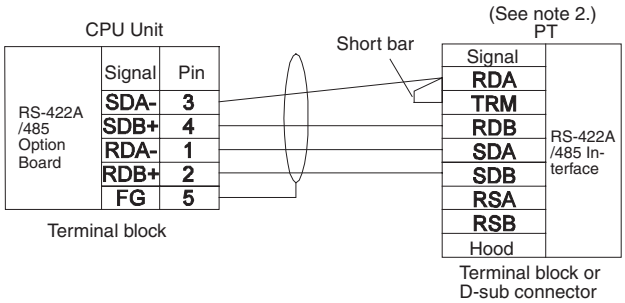

- Communications Mode: Host Link (unit number 0 only for Host Link)
  NT Link (1:N, N = 1 Unit only)

Note (1) RS-422A/485 Option Board settings:
Terminating resistance ON, 4-wire.

(2) The terminating resistant setting shown above is an example for the NT631/NT631C. The setting method varies with the PT. Refer to the manual for you PT for details.

1:N, 4-wire Connections from RS-422A/485 to RS-422A/485 Ports

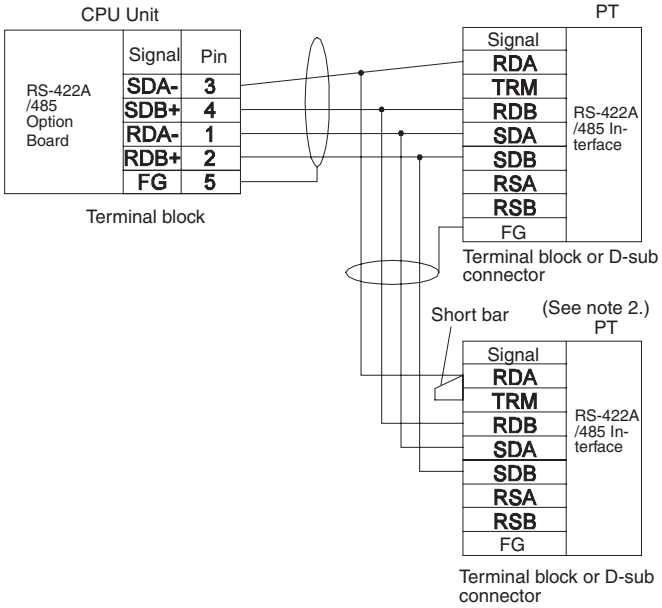

- Communications Mode: 1:N NT Link

Note (1) RS-422A/485 Option Board settings:
Terminating resistance ON, 4-wire.

(2) The terminating resistant setting shown above is an example for the NT631/NT631C. The setting method varies with the PT. Refer to the manual for you PT for details.

1:N, 2-wire Connections from RS-422A/485 to RS-422A/485 Ports

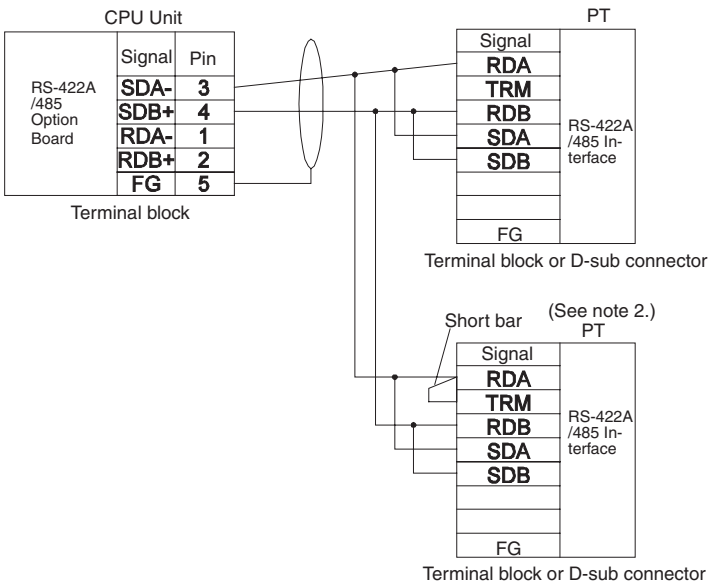

- Communications Mode: 1:N NT Link

Note (1) RS-422A/485 Option Board settings:
Terminating resistance ON, 2-wire.

(2) The terminating resistant setting shown above is an example for the NT631/NT631C. The setting method varies with the PT. Refer to the manual for you PT for details.

Connections for Serial Gateway and No-protocol Communications

This section describes the connections for Serial Gateway, and no-protocol communications. Up to 32 nodes can be used for 1:N connections.

Port	Configu-ration	Schematic diagram
RS-232C	1:1	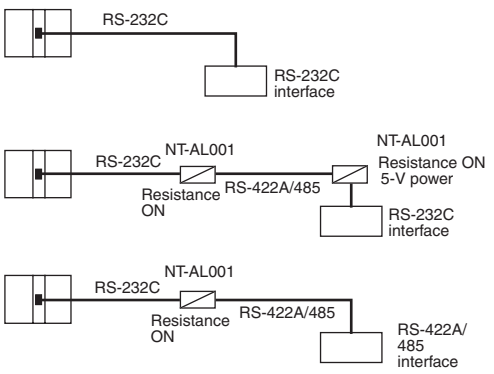
RS-232C	1:N	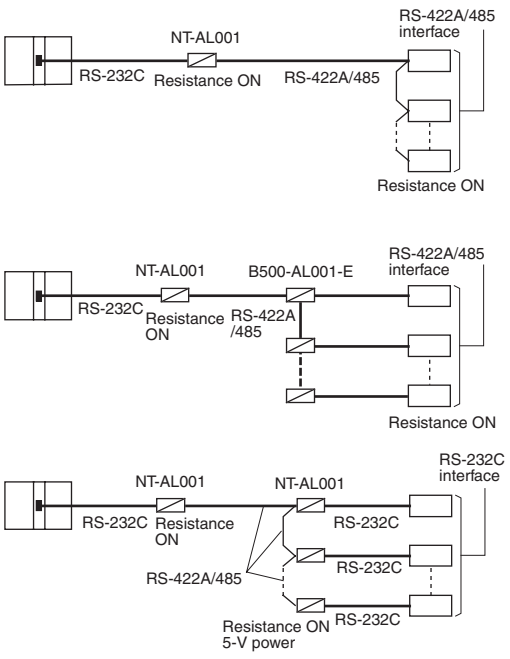

Note (1) The maximum cable length for RS-232C is 15 m. The RS-232C standard, however, does not cover baud rates above 19.2 Kbps. Refer to the manual for the device being connected to confirm support.

(2) The combined cable length for RS-422A/485 is 500 m including branch lines.

(3) The maximum cable length is limited to 2 m when an NT-AL001 Link Adapter is connected.

(4) Branch lines must be a maximum of 10 m long.

Port	Configuration	Schematic diagram
RS-422A/485	1:1	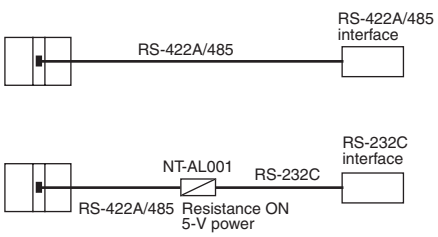
RS-422A/485	1:N	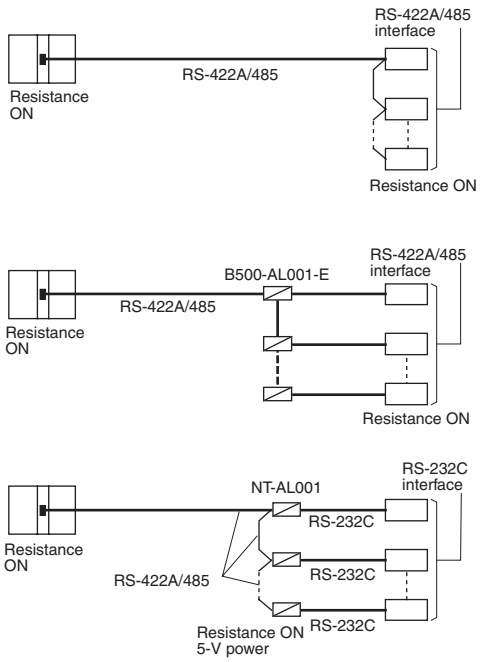

Note (1) The maximum cable length for RS-232C is 15 m. The RS-232C standard, however, does not cover baud rates above 19.2 Kbps. Refer to the manual for the device being connected to confirm support.

(2) The CP1W-CIF11 is a non-isolated board, so the maximum transmission distance is 50 m. The CP1W-CIF12 is an isolated board, so the maximum transmission distance is 500 m. For distances over 50 m, use the RS-422A/485 port on the CP1W-CIF12 directly, or the RS-232C port on the CP1W-CIF01 and then connect through the NT-AL001 Link Adapter, which is isolated. Doing so will enable a maximum transmission distance of 500 m.

(3) The maximum cable length is limited to 2 m when an NT-AL001 Link Adapter is connected.

(4) Branch lines must be a maximum of 10 m long.

Connection Examples

The connection examples in the remainder of this section show only the basic connection diagrams. We recommend that appropriate noise countermeasures be taken in actual applications, including the use of shielded twisted-pair cables. Refer to *RS-232C and RS-422A/485 Wiring* for actual wiring methods.

Connecting RS-232C Ports 1:1

Connections to E5CK Controller

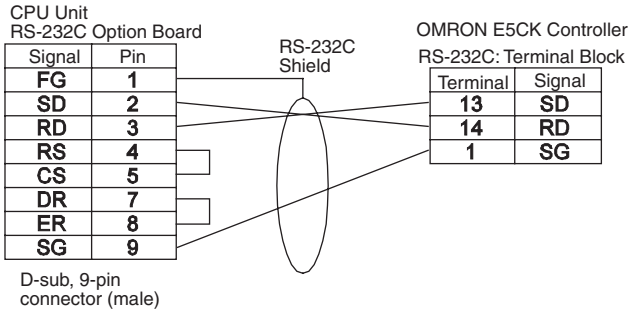

Connections to a Host Computer

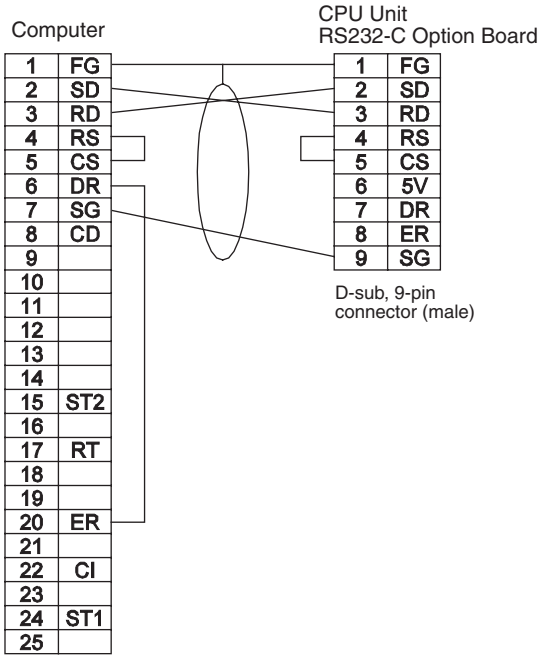

Connections to a Personal Computer with RTS-CTS Flow Control

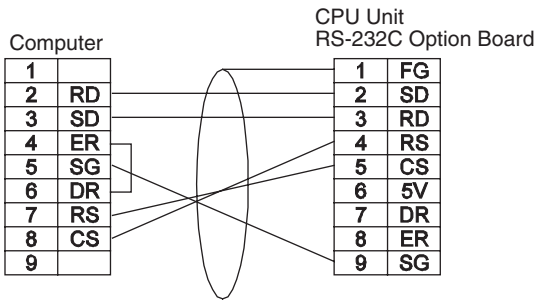

Connecting a Host Computer with NT-AL001 Converting Link Adapters

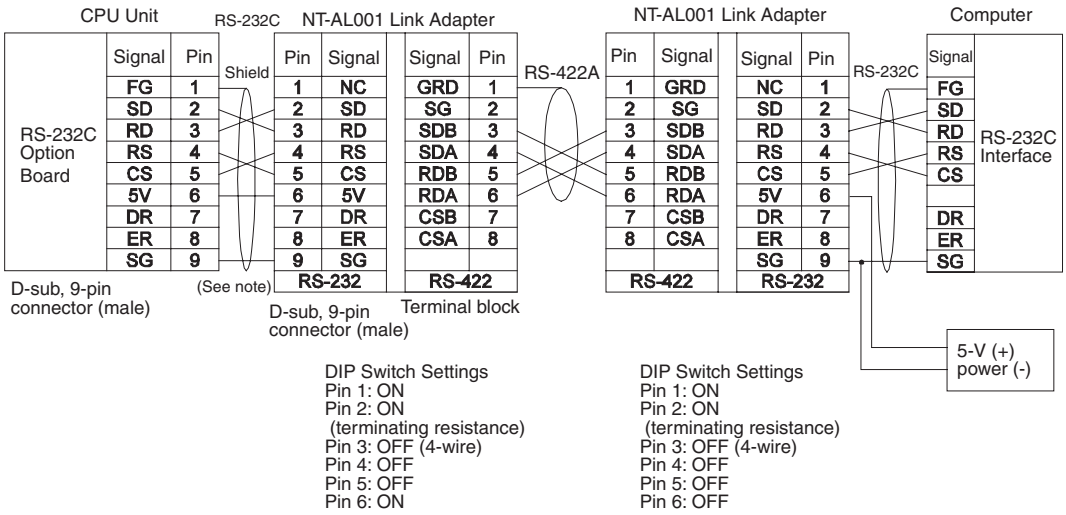

Note We recommend using the following NT-AL001 Link Adapter Connecting Cables to connect to NT-AL001 Link Adapters.
XW2Z-200T-1: 2 m
XW2Z-500T-1: 5 m

Connections to a Modem

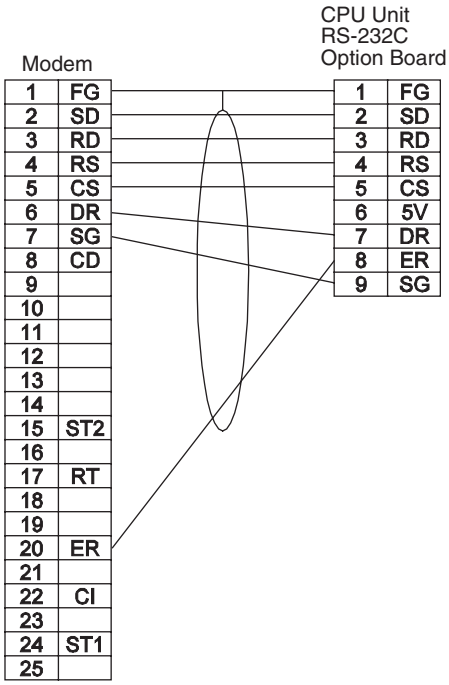

1:N Connections Using RS-232C Ports

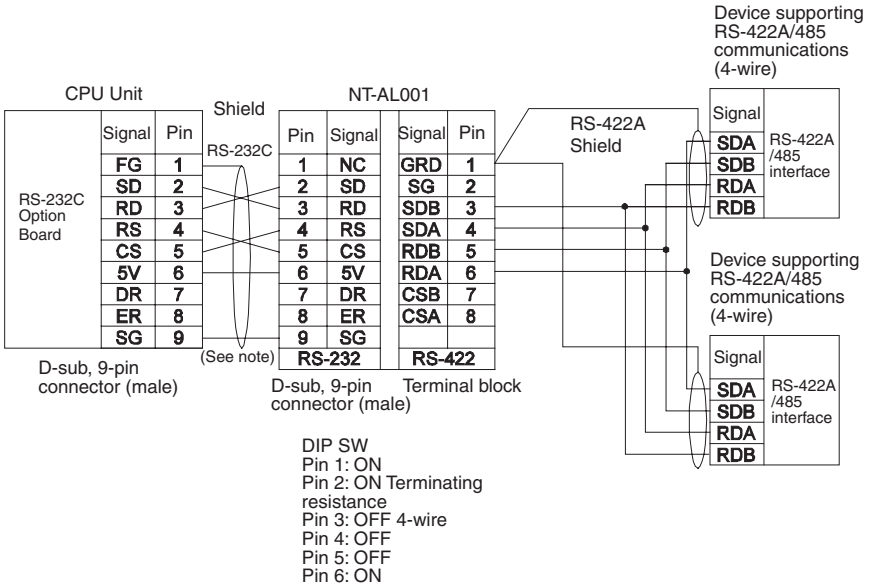

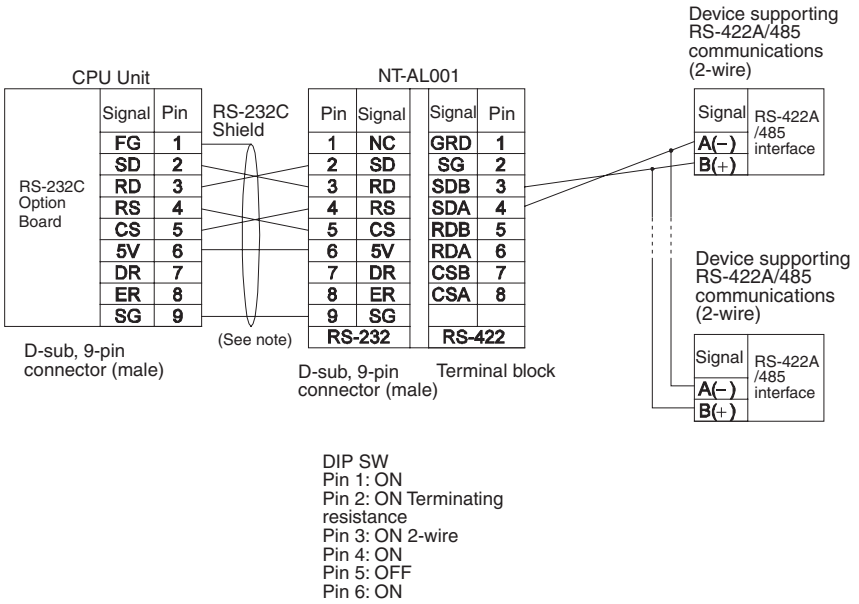

Note We recommend using the following NT-AL001 Link Adapter Connecting Cables to connect to NT-AL001 Link Adapters.
XW2Z-070T-1: 0.7 m
XW2Z-200T-1: 2 m

1:1 Connections Using RS-422A/485 Ports

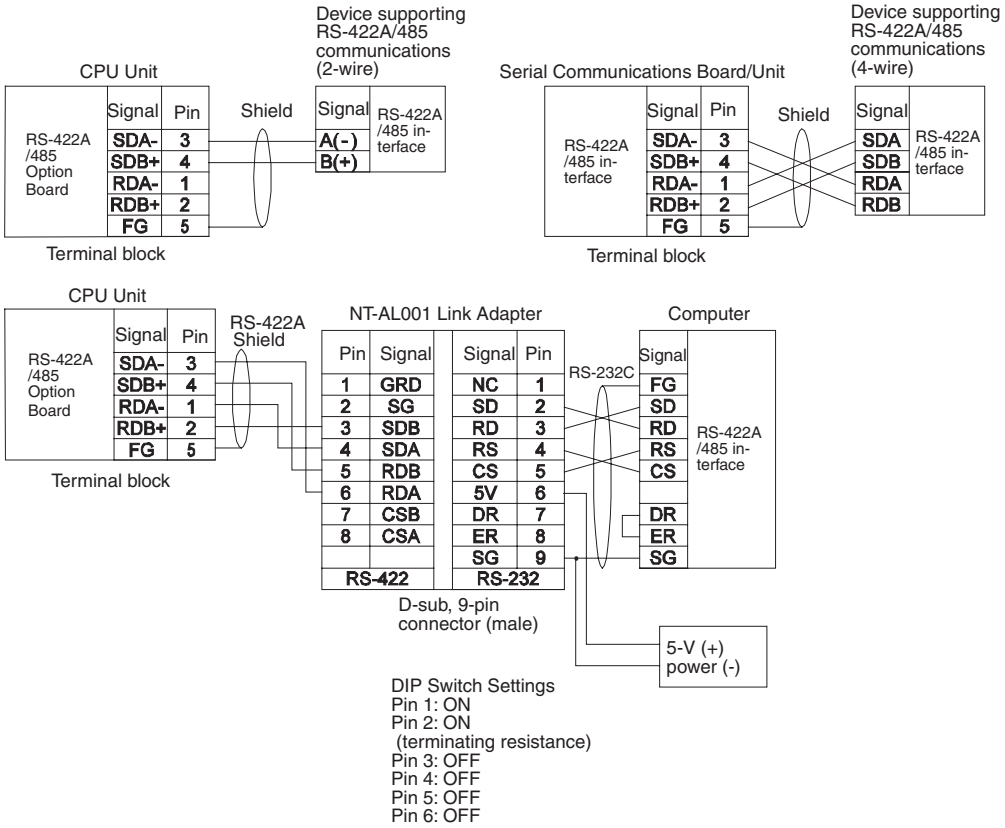

1:N Connections Using RS-422A/485 Ports

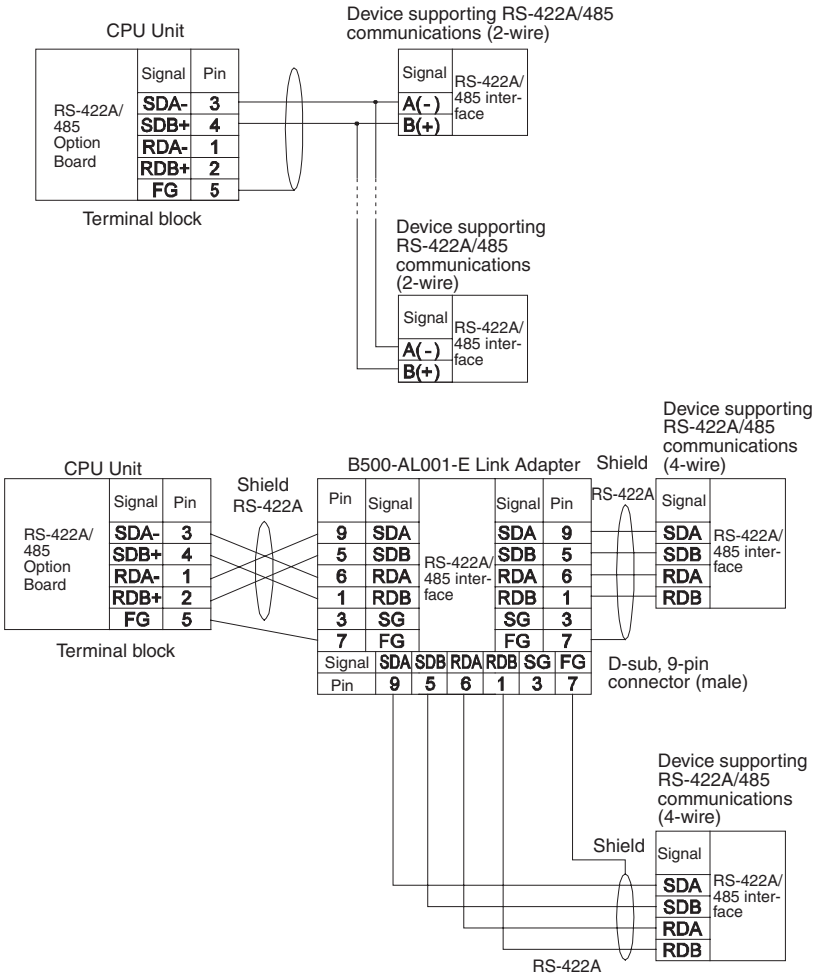

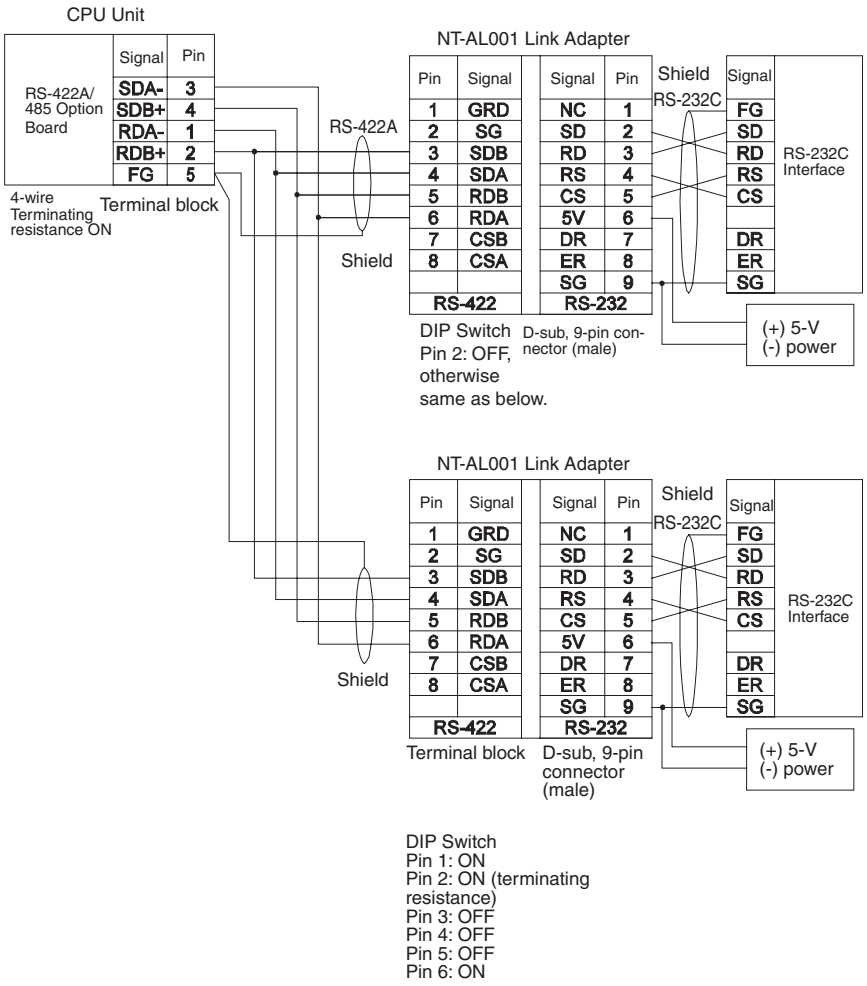

1:N NT Link Connections with Programmable Terminals

Direct Connections from RS-232C to RS-232C Ports

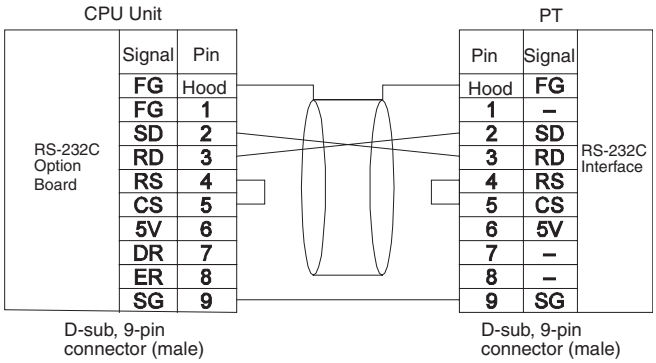

- Communications Mode: Host Link (unit number 0 only for Host Link)
  NT Link (1:N, N = 1 Unit only)
- OMRON Cables with Connectors:
  XW2Z-070T-1: 0.7 m
  XW2Z-200T-1: 2 m

1:N, 4-wire Connections from RS-422A/485 to RS-422A/485 Ports

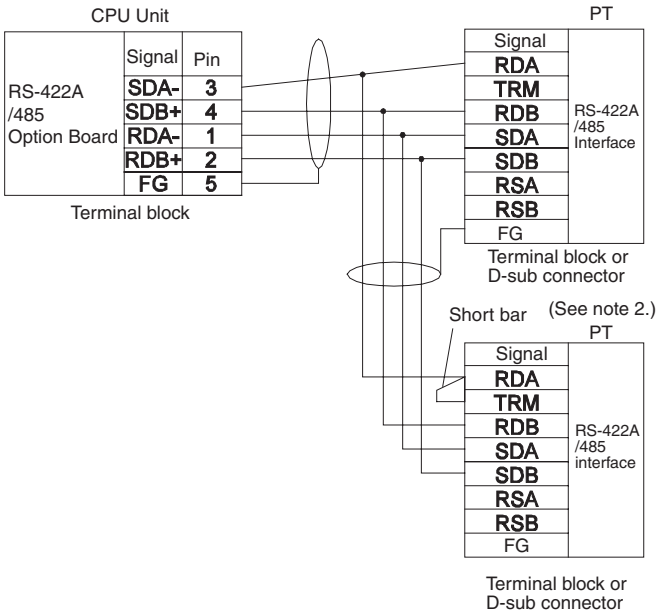

- Communications Mode: 1:N NT Link

Note (1) RS-422A/485 Option Board settings:
Terminating resistance ON, 4-wire.

(2) The terminating resistant setting shown above is an example for the NT631/NT631C. The setting method varies with the PT. Refer to the manual for you PT for details.

1:N, 2-wire Connections from RS-422A/485 to RS-422A/485 Ports

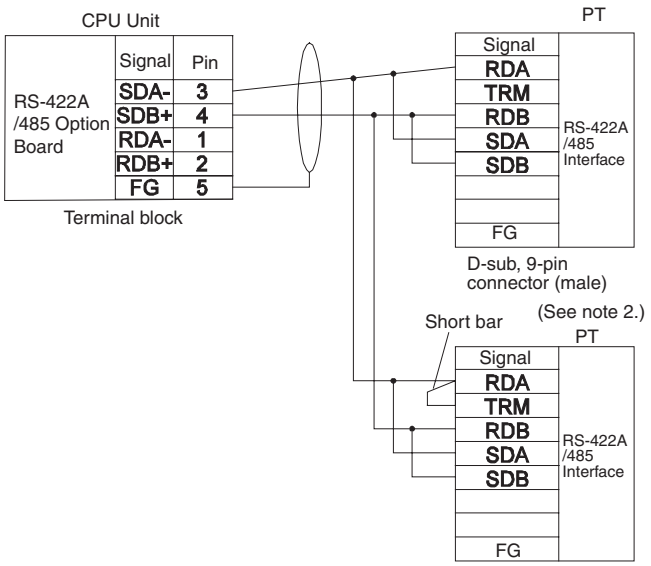

- Communications Mode: 1:N NT Link

Note (1) RS-422A/485 Option Board settings:
Terminating resistance ON, 2-wire.

(2) The terminating resistant setting shown above is an example for the NT631/NT631C. The setting method varies with the PT. Refer to the manual for you PT for details.

Serial PLC Link Connection Examples

This section provides connection examples for using Serial PLC Link. The communications mode used here is Serial PLC Link.

Connecting an RS-422A Converter

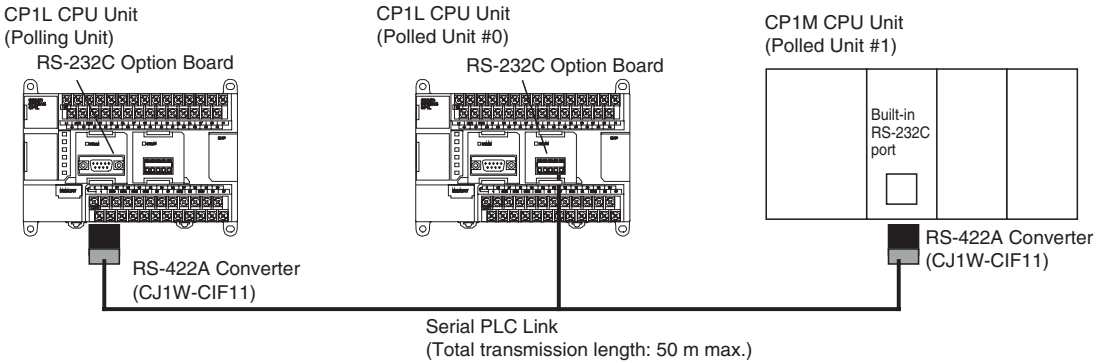

Note The CP1W-CIF11 is not insulated, so the total transmission distance for the whole transmission path is 50 m max. If the total transmission distance is greater than 50 m, use the RS-422A/485 port on the CP1W-CIF12 directly, or the insulated NT-AL001, and do not use the CP1W-CIF11. If the CP1W-CIF12 or NT-AL001 is used, the total transmission distance for the whole transmission path is 500 m max.

Connection with an RS-232C Port

RS-232C connection is also possible when using a Serial PLC Link to connect two CP1L CPU Units.

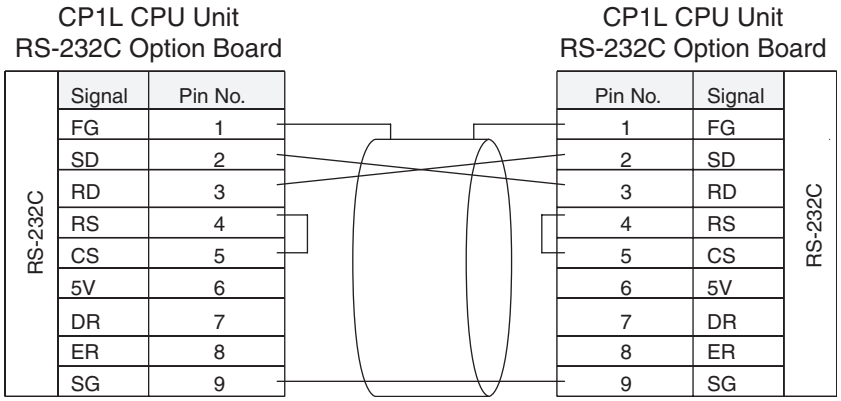

Connection Examples

CP1L CPU Unit (Master)
CP1W-CIF01
RS-232C Option Board
DIP switch
Pin No. 1: ON
(With termination resistance.)
Pin No. 2: OFF (4-wire type)
Pin No. 3: OFF (4-wire type)
Pin No. 4: OFF
Pin No. 5: OFF (No RS control for RD.)
Pin No. 6: OFF (No RS control for SD.)

CP1L CPU Unit (Slave No. 0)
CP1W-CIF11/CIF12
RS-422A/485 Option Board
DIP switch
Pin No. 1: OFF
(No termination resistance.)
Pin No. 2: OFF (4-wire type)
Pin No. 3: OFF (4-wire type)
Pin No. 4: OFF
Pin No. 5: OFF (No RS control for RD.)
Pin No. 6: ON (With RS control for SD.)

CJ1M CPU Unit (Slave No. 1)
CJ1W-CIF11
DIP switch
Pin No. 1: ON
(With termination resistance.)
Pin No. 2: OFF (4-wire type)
Pin No. 3: OFF (4-wire type)
Pin No. 4: OFF
Pin No. 5: OFF (No RS control for RD.)
Pin No. 6: ON (With RS control for SD.)

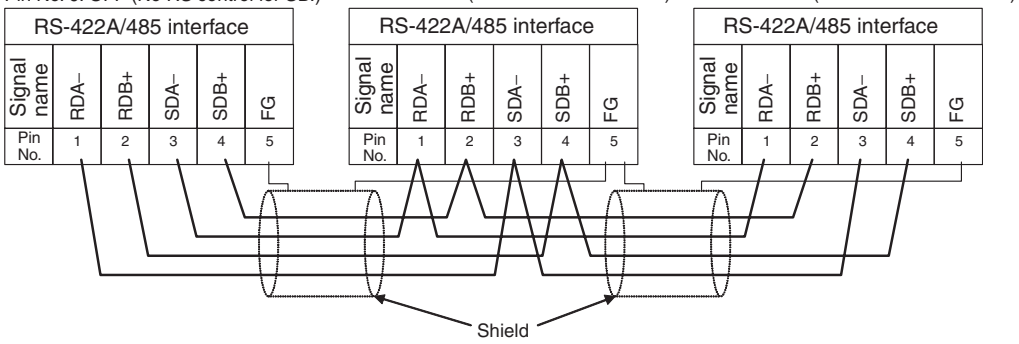

CP1L CPU Unit (Master)
CP1W-CIF01
RS-232C Option Board
DIP switch
Pin No. 1: ON
(With termination resistance.)
Pin No. 2: ON (2-wire type)
Pin No. 3: ON (2-wire type)
Pin No. 4: OFF
Pin No. 5: OFF (No RS control for RD.)
Pin No. 6: ON (With RS control for SD.)

CP1L CPU Unit (Slave No. 0)
CP1W-CIF11/CIF12
RS-422A/485 Option Board
DIP switch
Pin No. 1: OFF
(No termination resistance.)
Pin No. 2: ON (2-wire type)
Pin No. 3: ON (2-wire type)
Pin No. 4: OFF
Pin No. 5: OFF (No RS control for RD.)
Pin No. 6: ON (With RS control for SD.)

CJ1M CPU Unit (Slave No. 1)
CJ1W-CIF11
DIP switch
Pin No. 1: ON
(With termination resistance.)
Pin No. 2: ON (2-wire type)
Pin No. 3: ON (2-wire type)
Pin No. 4: OFF
Pin No. 5: OFF (No RS control for RD.)
Pin No. 6: ON (With RS control for SD.)

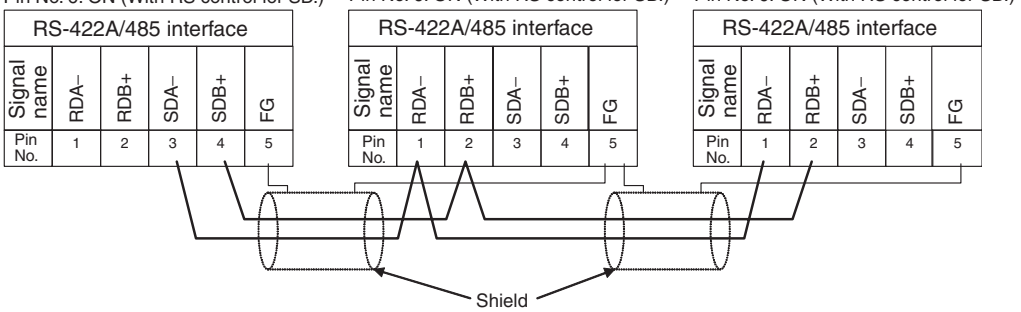

Connections in Loopback Test

Connect the communications ports as shown below.

RS-232C port

Pin	Signal
2	SD
3	RD
4	RS
5	CS
1	FG
8	ER
7	DR

RS-422A/485 port

Pin	Signal
3	SDA-
4	SDB+
1	RDA-
2	RDB+
5	FG

RS-232C and RS-422A/485 Wiring

Recommended RS-232C Wiring Examples

It is recommended that RS-232C cables be connected as described below especially when the Option Board is used in an environment where it is likely to be subject to electrical noise.

1. Always use shielded twisted-pair cables as communications cables.

Model	Manufacturer
UL2464 AWG28x5P IFS-RVV-SB (UL product) AWG28x5P IFVV-SB (non-UL product)	Fujikura Ltd.
UL2464-SB (MA) 5Px28AWG (7/0.127) (UL product) CO-MA-VV-SB 5Px28AWG (7/0.127) (non-UL product)	Hitachi Cable, Ltd.

2. Combine signal wires and SG (signal ground) wires in a twisted-pair cable. At the same time, bundle the SG wires to the connectors on Option Board and the remote device.
3. Connect the shield of the communications cable to the Hood (FG) terminal of the RS-232C connector on the Option Board. At the same time, ground the ground (GR) terminal of the CPU Unit to 100 Ω or less.
4. A connection example is shown below.

Example: Twisted-pair Cable Connecting SD-SG, RD-SG, RTS-SG, and CTS-SG Terminals in Toolbus Mode

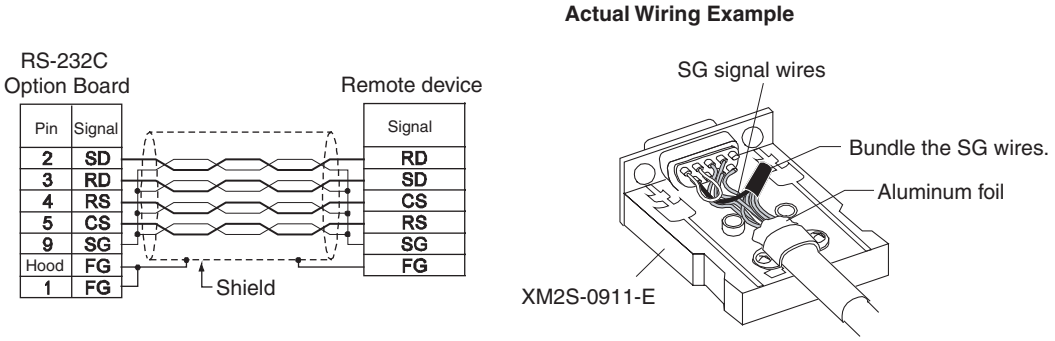

Note The Hood (FG) is internally connected to the ground terminal (GR) on the CPU Unit. Therefore, FG is grounded by grounding the ground terminal (GR) on the power supply terminal block. Although there is conductivity between the Hood (FG) and pin 1 (FG), connect the Hood (FG) to the shield because the Hood (FG) has smaller contact resistance with the shield than pin 1 (FG), and thus provides better noise resistance.

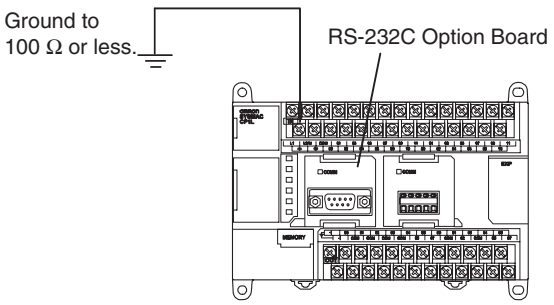

Recommended RS-422A/485 Wiring Examples

Use the following wiring methods for RS-422A/485 to maintain transmission quality.

1. Always use shielded twisted-pair cables as communications cables.

Model	Manufacturer
CO-HC-ESV-3Px7/0.2	Hirakawa Hewtech Corp.

2. Connect the shield of the communications cable to the FG terminal on the RS-422A/485 Option Board. At the same time, ground the ground (GR) terminal of the CPU Unit to 100 Ω or less.

Note Always ground the shield only at the RS-422A/485 Option Board end. Grounding both ends of the shield may damage the device due to the potential difference between the ground terminals.

Connection examples are shown below.

- 2-Wire Connections

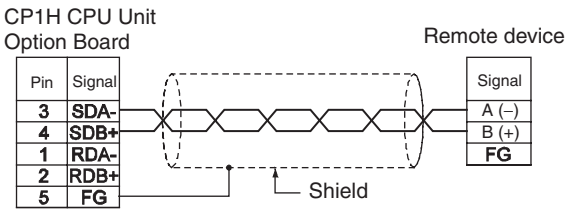

- 4-Wire Connections

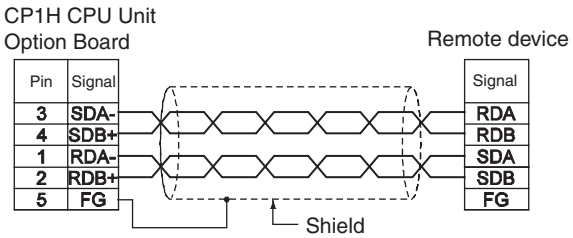

- Using a B500-AL001-E Link Adapter

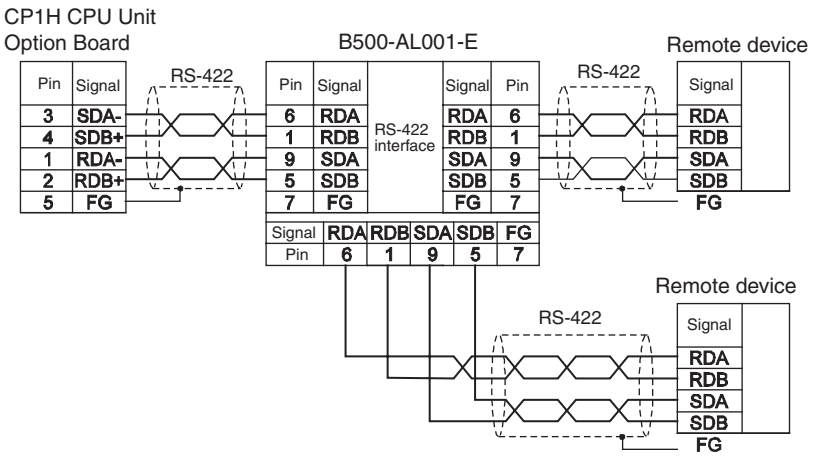

• With NT-AL001 RS-232C/RS-422 Link Adapter

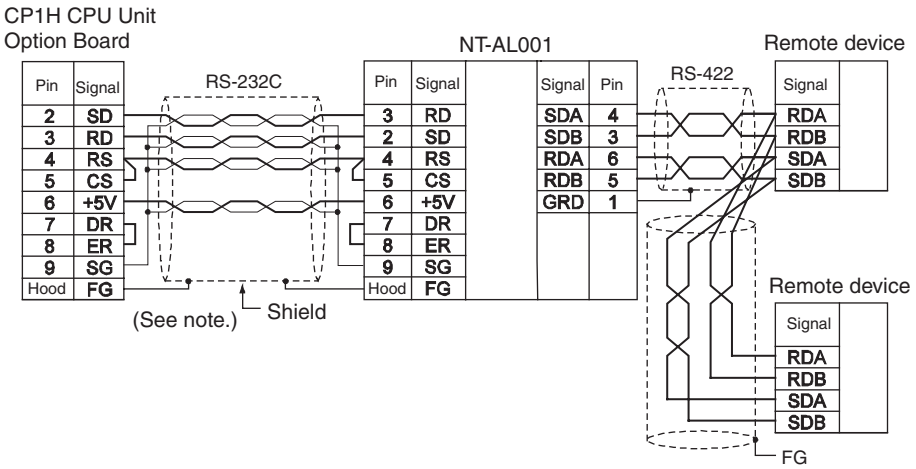

Note (1) The following cables are available for this connection.

Length	Model
70 cm	XW2Z-070T-1
2 m	XW2Z-200T-1

It is recommended that one of these cables be used to connect the RS-232C port on the Option Board to the NT-AL001 RS-232C/RS-422 Link Adapter. The recommended wiring for these cables is shown below.

• Wiring for the Recommended Cables (XW2Z-070T-1 and XW2Z-200T-1, 10-conductor Cables)

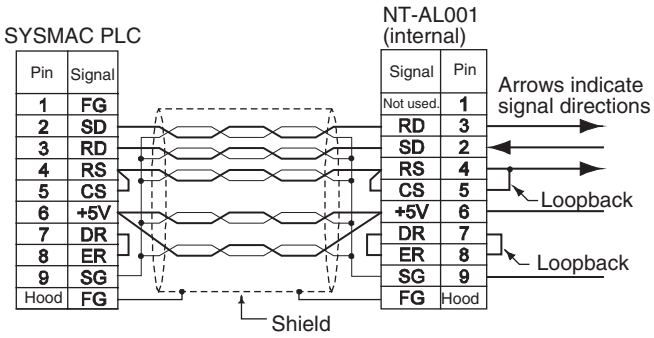

(2) The XW2Z-070T-1 and XW2Z-200T-1 Connecting Cables for the NT-AL001 Link Adapter uses special wiring for the DTS and RTS signals. Do not use these signals with other devices; they may be damaged.

(3) The Hood (FG) is internally connected to the ground terminal (GR) on the CPU Unit. Therefore, FG is grounded by grounding the ground terminal (GR) on the power supply terminal block.

Wiring Connectors

Use the following steps to wire connectors.

See the following diagrams for the length of the cable portion to be cut in each step.

Shield Connected to Hood (FG)

1. Cut the cable to the required length.
2. Remove the specified length of the sheath from the cable using a knife. Be careful not to scratch the braided shield.

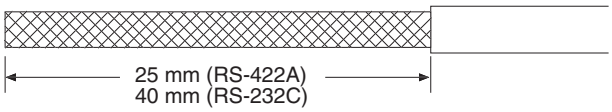

3. Trim off the braided shield using scissors so that the remaining shield length is 10 mm.

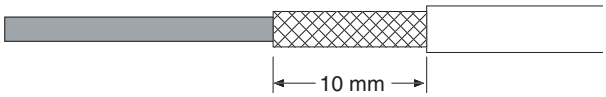

4. Remove the insulation from each conductor using a stripper so that the exposed conductor length is 5 mm.

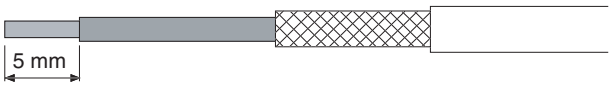

5. Fold back the braided shield.

6. Wrap aluminum foil tape around the folded shield.

Shield Not Connected to Hood (FG)

1. Cut the cable to the required length.
2. Remove the specified length of the sheath from the cable using a knife. Be careful not to scratch the braided shield.

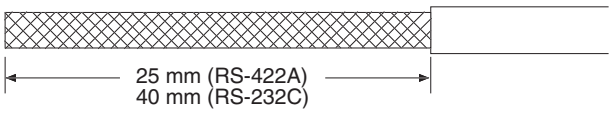

3. Trim off all the braided shield using scissors.

4. Remove the insulation from each conductor using a stripper so that the exposed conductor length is 5 mm.

5. Wrap adhesive tape around the conductor from which the braided shield was removed.

Soldering

1. Thread a heat-shrinking tube through each conductor.
2. Temporarily solder each conductor to the corresponding connector terminals.
3. Completely solder each conductor.

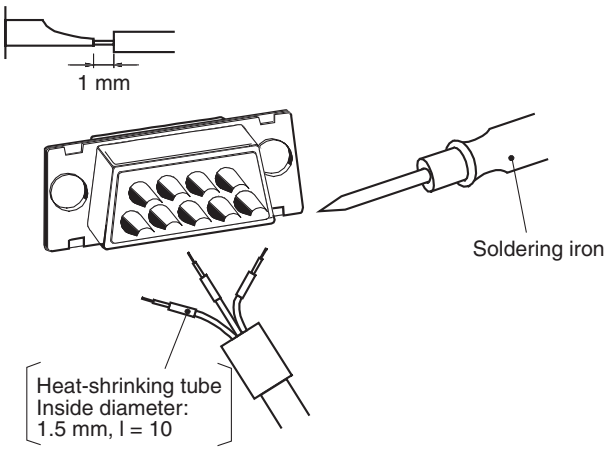

4. Return the heat-shrinking tube to the soldered portion, then heat the tube to shrink it in place.

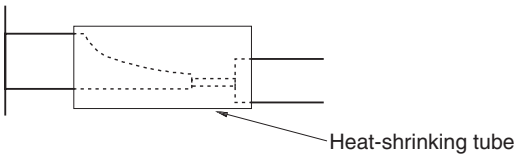

Assembling Connector Hood

Assemble the connector hood as shown below.

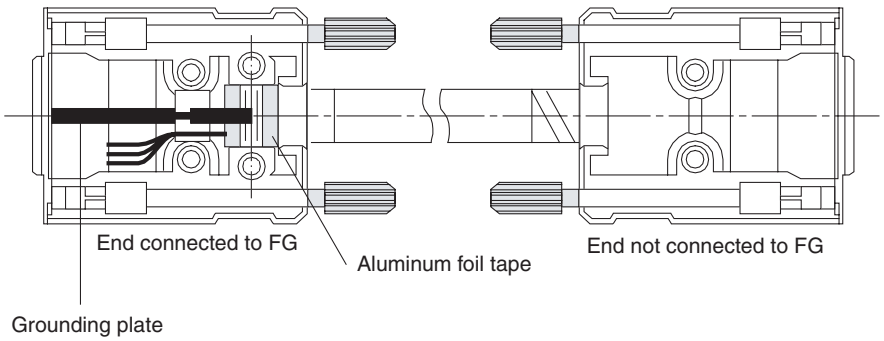

Connecting to Unit

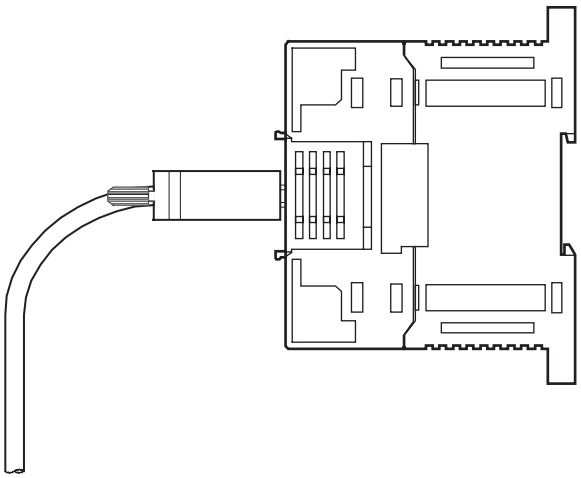

Appendix G
PLC Setup

Startup Settings

Startup Hold Settings

	Name	Default	Settings	When setting is read by CPU Unit	Internal address	Bits	Settings
1	Force Status Hold Bit	Not held.	Not held.	When power is turned ON	80	14	0
			Held.				1
2	IOM Hold Bit	Not held.	Not held.	When power is turned ON	80	15	0
			Held.				1

Startup Data Read Setting

	Name	Default	Settings	When setting is read by CPU Unit	Internal address	Bits	Settings
1	Read DM from flash memory	Do not read.	Do not read.	When power is turned ON	82	15	0
			Read.				1

Mode: CPU Unit Operating Mode

	Name	Default	Settings	When setting is read by CPU Unit	Internal address	Bits	Settings
1	Use programming console (RUN mode)	Use programming console (RUN mode) (See note.)	Use programming console: RUN mode	When power is turned ON	81	00 to 15	0000 hex
			Program: PROGRAM mode				8000 hex
			Monitor: MONITOR mode				8001 hex
			Run: RUN mode				8002 hex

Note A Programming Console cannot be connected to the CP1L. If the default setting, “Use programming console,” is set, the CPU Unit will start in RUN mode.

Settings: CPU Unit Settings

Execute Process Settings

	Name	Default	Settings	When setting is read by CPU Unit	Internal address	Bits	Settings
1	Do not detect Low Battery (run without battery)	Detect.	Detect	Every cycle	128	15	0
			Do not detect.				1
2	Detect Interrupt Task Error	Detect.	Detect	Every cycle	128	14	0
			Do not detect.				1
3	Stop CPU on Instruction Error	Do not stop.	Do not stop.	At start of operation	197	15	0
			Stop				1
4	Don't resister FAL to error log	Register.	Register.	Every cycle	129	15	0
			Do not register.				1

Comms Instructions Settings in FB: Settings for Communications Instructions in Function Blocks

	Name	Default	Settings	When setting is read by CPU Unit	Internal address	Bits	Settings
1	Retry Counts: Number of retries	0	0 to 15	At start of operation	200	00 to 03	0 hex : F hex
2	Response Timeout (default 2s), Comms Instructions in FB	2 s	2 s	At start of operation	201	00 to 15	0000 hex
			1: 1 × 0.1 s				0001 hex
			:				:
			65535: 65,535 × 0.1 s				FFFF hex
3	Response Timeout (default 2s), DeviceNet Comms Instruction in FB	2 s	2 s	At start of operation	202	00 to 15	0000 hex
			1: 1 × 0.1 s				0001 hex
			:				:
			65535: 65,535 × 0.1 s				FFFF hex

Timings: Time and Interrupt Settings

Cycle Time Settings

	Name		Default	Settings	When setting is read by CPU Unit	Internal address	Bits	Settings
1	Watch Cycle Time (default 1000 ms)		Use default.	Use default. (Default: 1 s)	At start of operation	209	15	0
				Use user setting.				1
	1-1	Watch Cycle Time (default 1000 ms)	1,000 ms	1: 1 × 10 ms	At start of operation	209	00 to 14	001 hex
				:				:
				40,000: 40,000 × 10 ms				FA0 hex
2	Cycle Time (No Setting)		No minimum cycle time	No minimum cycle time	At start of operation	208	00 to 15	0000 hex
				1 ms				0001 hex
				:				:
				32,000 ms				7D00 hex

Interrupt Setting

	Name	Default	Settings	When setting is read by CPU Unit	Internal address	Bits	Settings
1	Scheduled Interrupt Interval	10 ms	10 ms	At start of operation	195	00 to 03	0 hex
			1 ms				1 hex
			0.1 ms				2 hex

Input Constant Settings

	Name	Default	Settings	When setting is read by CPU Unit	Internal address	Bits	Settings
1	0CH: CIO 0	8 ms Default (8ms)	No filter (0 ms)	When power is turned ON	10	00 to 07	10 hex
			0.5 ms				11 hex
			1 ms				12 hex
			2 ms				13 hex
			4 ms				14 hex
			8 ms				15 hex
			16 ms				16 hex
			32 ms				17 hex
2	1 CH: CIO 1	Same as above.	Same as above.	Same as above.	10	08 to 15	Same as above.
3	2 CH: CIO 2				11	00 to 07	
4	3 CH: CIO 3				11	08 to 15	
5	4 CH: CIO 4				12	00 to 07	
6	5 CH: CIO 5				12	08 to 15	
7	6 CH: CIO 6				13	00 to 07	
8	7 CH: CIO 7				13	08 to 15	
9	8 CH: CIO 8				14	00 to 07	
10	9 CH: CIO 9				14	08 to 15	
11	10 CH: CIO 10				15	00 to 07	
12	11 CH: CIO 11				15	08 to 15	
13	12 CH: CIO 12				16	00 to 07	
14	13 CH: CIO 13				16	08 to 15	
15	14 CH: CIO 14				17	00 to 07	
16	15 CH: CIO 15				17	08 to 15	
17	16 CH: CIO 16				18	00 to 07	
18	17 CH: CIO 17				18	08 to 15	

Serial Port 1 Settings

Serial Communications Settings

	Name			Default	Settings	When setting is read by CPU Unit	Internal address	Bits	Settings
1	Communications Settings			Standard (9600; 1,7,2,E)	Standard (9600; 1,7,2,E) (The standard settings are as follows: 9,600 baud, 1 start bit, 7-bit data, even parity, and 2 stop bits.)	Every cycle	144 (CP1L M-type CPU Unit)	15	0
							160 (CP1L L-type CPU Unit)		
					Custom				1
2	Mode			Host Link	Host Link	Every cycle	144 (CP1L M-type CPU Unit)	08 to 11	0 hex 5 hex
					NT Link (1:N)				2 hex
					RS-232C		160 (CP1L L-type CPU Unit)		3 hex
					ToolBus (peripheral bus)				4 hex
					Serial Gateway				9 hex
					PC Link (Slave)				7 hex
					PC Link (Master)				8 hex
	2-1	Host Link							
		2-1-1	Baud	9,600 bps	300 bps	Every cycle	145 (CP1L M-type CPU Unit)	00 to 07	01 hex
					600 bps				02 hex
					1,200 bps				03 hex
					2,400 bps		161 (CP1L L-type CPU Unit)		04 hex
					4,800 bps				05 hex
					9,600 bps				00 or 06 hex
					19,200 bps				07 hex
					38,400 bps				08 hex
					57,600 bps				09 hex
					115,200 bps				0A hex
		2-1-2	Format (data length, stop bits, parity)	7,2,E: 7-bit data, 2 stop bits, even parity	7,2,E: 7-bit data, 2 stop bits, even parity	Every cycle	144 (CP1L M-type CPU Unit)	00 to 03	0 hex
					7,2,O: 7-bit data, 2 stop bits, odd parity				1 hex
					7,2,N: 7-bit data, 2 stop bits, no parity				2 hex
					7,1,E: 7-bit data, 2 stop bits, even parity		160 (CP1L L-type CPU Unit)		4 hex
					7,1,O: 7-bit data, 1 stop bit, odd parity				5 hex
					7,1,N: 7-bit data, 1 stop bit, no parity				6 hex
					8,2,E: 8-bit data, 2 stop bits, even parity				8 hex
					8,2,O: 8-bit data, 2 stop bits, odd parity				9 hex
					8,2,N: 8-bit data, 2 stop bits, no parity				A hex
					8,1,E: 8-bit data, 1 stop bit, even parity				C hex
					8,1,O: 8-bit data, 1 stop bit, odd parity				D hex
					8,1,N: 8-bit data, 1 stop bit, no parity				E hex

	Name			Default	Settings	When setting is read by CPU Unit	Internal address	Bits	Settings
2	2-1	2-1-3	Unit Number	0	0	Every cycle	147 (CP1L M-type CPU Unit)	00 to 07	00 hex
					:				:
					31		161 (CP1L L-type CPU Unit)		1F hex
	2-2	NT Link (1:N): 1:N NT Links							
		2-2-1	Baud	9,600 (disabled)	38,400 (standard)	Every cycle	145 (CP1L M-type CPU Unit)	00 to 07	00 hex
					115,200 (high speed)				0A hex
							161 (CP1L L-type CPU Unit)		
		2-2-2	NT/PC Link Max: Highest unit number	0	0	Every cycle	150 (CP1L M-type CPU Unit)	00 to 03	0 hex
					:				:
					7		166 (CP1L L-type CPU Unit)		7 hex
	2-3	RS-232C							
		2-3-1	Baud	9600 bps	300 bps	Every cycle	145 (CP1L M-type CPU Unit)	00 to 07	01 hex
					600 bps				02 hex
					1,200 bps				03 hex
					2,400 bps		161 (CP1L L-type CPU Unit)		04 hex
					4,800 bps				05 hex
					9,600 bps				00 or 06 hex
					19,200 bps				07 hex
					38,400 bps				08 hex
					57,600 bps				09 hex
					115,200 bps				0A hex
		2-3-2	Format (data length, stop bits, parity)	7,2,E: 7-bit data, 2 stop bits, even parity	7,2,E: 7-bit data, 2 stop bits, even parity	Every cycle	144 (CP1L M-type CPU Unit)	00 to 03	0 hex
					7,2,O: 7-bit data, 2 stop bits, odd parity				1 hex
					7,2,N: 7-bit data, 2 stop bits, no parity				2 hex
					7,1,E: 7-bit data, 2 stop bits, even parity		160 (CP1L L-type CPU Unit)		4 hex
					7,1,O: 7-bit data, 1 stop bit, odd parity				5 hex
					7,1,N: 7-bit data, 1 stop bit, no parity				6 hex
					8,2,E: 8-bit data, 2 stop bits, even parity				8 hex
					8,2,O: 8-bit data, 2 stop bits, odd parity				9 hex
					8,2,N: 8-bit data, 2 stop bits, no parity				A hex
					8,1,E: 8-bit data, 1 stop bit, even parity				C hex
					8,1,O: 8-bit data, 1 stop bit, odd parity				D hex
					8,1,N: 8-bit data, 1 stop bit, no parity				E hex

	Name			Default	Settings	When setting is read by CPU Unit	Internal address	Bits	Settings
2	2-3	2-3-3	Start Code	Disable.	Disable.	Every cycle	149 (CP1L M-type CPU Unit)	12	0
					Set.		165 (CP1L L-type CPU Unit)		1
		2-3-4	Start Code	00 hex0x0000	0x0000	Every cycle	148 (CP1L M-type CPU Unit)	08 to 15	00 hex
					:				:
					0x00FF		164 (CP1L L-type CPU Unit)		FF hex
		2-3-5	End Code	Received Bytes: Receive specified number of bytes.	Received Bytes: Receive specified number of bytes.	Every cycle	149 (CP1L M-type CPU Unit)	08 and 09	00
					CR,LF				10
					Set End Code		165 (CP1L L-type CPU Unit)		01
		2-3-6	Received Bytes	256 bytes	256 bytes	Every cycle	149 (CP1L M-type CPU Unit)	00 to 07	00 hex
					1 byte				01 hex
					:				:
					255 bytes		165 (CP1L L-type CPU Unit)		FF hex
		2-3-7	Set End Code	0x0000	1 byte	Every cycle	148 (CP1L M-type CPU Unit)	00 to 07	00 hex
					:				:
					255 bytes		164 (CP1L L-type CPU Unit)		FF hex
		2-3-8	Delay	0 ms	0: 0 × 10 ms	Every cycle	146 (CP1L M-type CPU Unit)	00 to 15	0000 hex
					:				:
					9999: 9999 × 10 ms		162 (CP1L L-type CPU Unit)		270F hex
	2-4	ToolBus (peripheral bus)							
		2-4-1	Baud	9,600 bps	9,600 bps	Every cycle	145 (CP1L M-type CPU Unit)	00 to 07	00 or 06 hex
					19,200 bps				07 hex
					38,400 bps		161 (CP1L L-type CPU Unit)		08 hex
					57,600 bps				09 hex
					115,200 bps				0A hex

	Name		Default	Settings	When setting is read by CPU Unit	Internal address	Bits	Settings
2	2-5	Serial Gateway						
	2-5-1	Baud	9,600 bps	300 bps	Every cycle	145 (CP1L M-type CPU Unit)	00 to 07	01 hex
				600 bps				02 hex
				1,200 bps				03 hex
				2,400 bps		161 (CP1L L-type CPU Unit)		04 hex
				4,800 bps				05 hex
				9,600 bps				00 or 06 hex
				19,200 bps				07 hex
				38,400 bps				08 hex
				57,600 bps				09 hex
				115,200 bps				0A hex
	2-5-2	Format (data length, stop bits, parity)	7,2,E: 7-bit data, 2 stop bits, even parity	7,2,E: 7-bit data, 2 stop bits, even parity	Every cycle	144 (CP1L M-type CPU Unit)	00 to 03	0 hex
				7,2,O: 7-bit data, 2 stop bits, odd parity				1 hex
				7,2,N: 7-bit data, 2 stop bits, no parity				2 hex
				7,1,E: 7-bit data, 2 stop bits, even parity		160 (CP1L L-type CPU Unit)		4 hex
				7,1,O: 7-bit data, 1 stop bit, odd parity				5 hex
				7,1,N: 7-bit data, 1 stop bit, no parity				6 hex
				8,2,E: 8-bit data, 2 stop bits, even parity				8 hex
				8,2,O: 8-bit data, 2 stop bits, odd parity				9 hex
				8,2,N: 8-bit data, 2 stop bits, no parity				A hex
				8,1,E: 8-bit data, 1 stop bit, even parity				C hex
				8,1,O: 8-bit data, 1 stop bit, odd parity				D hex
				8,1,N: 8-bit data, 1 stop bit, no parity				E hex
	2-5-3	Response Timeout	50: 50 × 100 ms = 5 s	50: 50 × 100 ms = 5 s	Every cycle	151 (CP1L M-type CPU Unit)	08 to 15	00 hex
				1: 1 × 100 ms				01 hex
				:				:
				255: 255 × 100 ms		167 (CP1L L-type CPU Unit)		FF hex
	2-6	PC Link (Slave)						
	2-6-1	Baud	9,600 bps (disabled)	38,400 (standard)	Every cycle	145 (CP1L M-type CPU Unit)	00 to 07	00 hex
				115,200 (high speed)		161 (CP1L L-type CPU Unit)		0A hex
	2-6-2	PC Link Unit No.	0	0	Every cycle	151 (CP1L M-type CPU Unit)	00 to 03	0 hex
				:				:
				7		167 (CP1L L-type CPU Unit)		7 hex

	Name			Default	Settings	When setting is read by CPU Unit	Internal address	Bits	Settings
2	2-7	PC Link (Master)							
		2-7-1	Baud	9,600 bps (disabled)	38,400 (standard)	Every cycle	145 (CP1L M-type CPU Unit)	00 to 07	00 hex
					115,200 (high speed)		161 (CP1L L-type CPU Unit)		0A hex
		2-7-2	Link Words	10 (default)	1 : 10 (default)	Every cycle	150 (CP1L M-type CPU Unit)	04 to 07	1 hex : 0 or A hex
							166 (CP1L L-type CPU Unit)		
		2-7-3	PC Link Mode	ALL	ALL	Every cycle	150 (CP1L M-type CPU Unit)	15	0
					Masters		166 (CP1L L-type CPU Unit)		1

Serial Port 2 Settings

Serial Communications Settings

	Name			Default	Settings	When setting is read by CPU Unit	Internal address	Bits	Settings
1	Communications Settings			Standard (9600 ; 1,7,2,E)	Standard (9600; 1,7,2,E) (The standard settings are as follows: 9,600 baud, 1 start bit, 7-bit data, even parity, and 2 stop bits.)	Every cycle	160 (CP1L M-type CPU Unit)	15	0
					Custom				1
2	Mode			Host Link	Host Link	Every cycle	160 (CP1L M-type CPU Unit)	08 to 11	0 hex 5 hex
					NT Link (1:N): 1:N NT Links				2 hex
					RS-232C				3 hex
					ToolBus (peripheral bus)				4 hex
					Serial Gateway				9 hex
					PC Link (Slave)				7 hex
					PC Link (Master)				8 hex
	2-1	Host Link							
		2-1-1	Baud	9,600 bps	300 bps	Every cycle	161 (CP1L M-type CPU Unit)	00 to 07	01 hex
					600 bps				02 hex
					1,200 bps				03 hex
					2,400 bps				04 hex
					4,800 bps				05 hex
					9,600 bps				00 or 06 hex
					19,200 bps				07 hex
					38,400 bps				08 hex
					57,600 bps				09 hex
					115,200 bps				0A hex
		2-1-2	Format (data length, stop bits, parity)	7,2,E: 7-bit data, 2 stop bits, even parity	7,2,E: 7-bit data, 2 stop bits, even parity	Every cycle	160 (CP1L M-type CPU Unit)	00 to 03	0 hex
					7,2,O: 7-bit data, 2 stop bits, odd parity				1 hex
					7,2,N: 7-bit data, 2 stop bits, no parity				2 hex
					7,1,E: 7-bit data, 2 stop bits, even parity				4 hex
					7,1,O: 7-bit data, 1 stop bit, odd parity				5 hex
					7,1,N: 7-bit data, 1 stop bit, no parity				6 hex
					8,2,E: 8-bit data, 2 stop bits, even parity				8 hex
					8,2,O: 8-bit data, 2 stop bits, odd parity				9 hex
					8,2,N: 8-bit data, 2 stop bits, no parity				A hex
					8,1,E: 8-bit data, 1 stop bit, even parity				C hex
					8,1,O: 8-bit data, 1 stop bit, odd parity				D hex
					8,1,N: 8-bit data, 1 stop bit, no parity				E hex
		2-1-3	Unit Number	0	0	Every cycle	161 (CP1L M-type CPU Unit)	00 to 07	00 hex
					:				:
					31				1F hex

	Name			Default	Settings	When setting is read by CPU Unit	Internal address	Bits	Settings
2	2-2	NT Link (1:N)							
		2-2-1	Baud	9,600 (disabled)	38,400 (standard)	Every cycle	161 (CP1L M-type CPU Unit)	00 to 07	00 hex
					115,200 (high speed)				0A hex
		2-2-2	NT/PC Link Max: Highest unit number	0	0	Every cycle	166 (CP1L M-type CPU Unit)	00 to 03	0 hex
					:				:
					7				7 hex
	2-3	RS-232C							
		2-3-1	Baud	9600 bps	300 bps	Every cycle	161 (CP1L M-type CPU Unit)	00 to 07	01 hex
					600 bps				02 hex
					1,200 bps				03 hex
					2,400 bps				04 hex
					4,800 bps				05 hex
					9,600 bps				00 or 06 hex
					19,200 bps				07 hex
					38,400 bps				08 hex
					57,600 bps				09 hex
					115,200 bps				0A hex
		2-3-2	Format (data length, stop bits, parity)	7,2,E: 7-bit data, 2 stop bits, even parity	7,2,E: 7-bit data, 2 stop bits, even parity	Every cycle	160 (CP1L M-type CPU Unit)	00 to 03	0 hex
					7,2,O: 7-bit data, 2 stop bits, odd parity				1 hex
					7,2,N: 7-bit data, 2 stop bits, no parity				2 hex
					7,1,E: 7-bit data, 2 stop bits, even parity				4 hex
					7,1,O: 7-bit data, 1 stop bit, odd parity				5 hex
					7,1,N: 7-bit data, 1 stop bit, no parity				6 hex
					8,2,E: 8-bit data, 2 stop bits, even parity				8 hex
					8,2,O: 8-bit data, 2 stop bits, odd parity				9 hex
					8,2,N: 8-bit data, 2 stop bits, no parity				A hex
					8,1,E: 8-bit data, 1 stop bit, even parity				C hex
					8,1,O: 8-bit data, 1 stop bit, odd parity				D hex
					8,1,N: 8-bit data, 1 stop bit, no parity				E hex
		2-3-3	Start Code	Disable.	Disable.	Every cycle	165 (CP1L M-type CPU Unit)	12	0
					Set.				1
		2-3-4	Start Code	00 hex0x0000	0x0000	Every cycle	164 (CP1L M-type CPU Unit)	08 to 15	00 hex
					:				:
					0x00FF				FF hex
		2-3-5	End Code	Received Bytes: Receive specified number of bytes.	Received Bytes: Receive specified number of bytes.	Every cycle	165 (CP1L M-type CPU Unit)	08 and 09	00
					CR,LF				10
					Set End Code				01

	Name			Default	Settings	When setting is read by CPU Unit	Internal address	Bits	Settings
2	2-3	2-3-6	Received Bytes	256 bytes	256 bytes	Every cycle	165 (CP1L M-type CPU Unit)	00 to 07	00 hex
					1 byte				01 hex
					:				:
					255 bytes				FF hex
		2-3-7	Set End Code	0x0000	0x0000	Every cycle	164 (CP1L M-type CPU Unit)	00 to 07	00 hex
					:				:
					0x00FF				FF hex
		2-3-8	Delay	0: 0 × 10 ms	0: 0 × 10 ms	Every cycle	162 (CP1L M-type CPU Unit)	00 to 15	0000 hex
					:				:
					9999: 9999 × 10 ms				270F hex
	2-4	ToolBus (peripheral bus)							
		2-4-1	Baud	9,600 bps	9,600 bps	Every cycle	161 (CP1L M-type CPU Unit)	00 to 07	00 or 06 hex
					19,200 bps				07 hex
					38,400 bps				08 hex
					57,600 bps				09 hex
					115,200 bps				0A hex
	2-5	Serial Gateway							
		2-5-1	Baud	9,600 bps	300 bps	Every cycle	161 (CP1L M-type CPU Unit)	00 to 07	01 hex
					600 bps				02 hex
					1,200 bps				03 hex
					2,400 bps				04 hex
					4,800 bps				05 hex
					9,600 bps				00 or 06 hex
					19,200 bps				07 hex
					38,400 bps				08 hex
					57,600 bps				09 hex
					115,200 bps				0A hex
		2-5-2	Format (data length, stop bits, parity)	7,2,E: 7-bit data, 2 stop bits, even parity	7,2,E: 7-bit data, 2 stop bits, even parity	Every cycle	160 (CP1L M-type CPU Unit)	00 to 03	0 hex
					7,2,O: 7-bit data, 2 stop bits, odd parity				1 hex
					7,2,N: 7-bit data, 2 stop bits, no parity				2 hex
					7,1,E: 7-bit data, 2 stop bits, even parity				4 hex
					7,1,O: 7-bit data, 1 stop bit, odd parity				5 hex
					7,1,N: 7-bit data, 1 stop bit, no parity				6 hex
					8,2,E: 8-bit data, 2 stop bits, even parity				8 hex
					8,2,O: 8-bit data, 2 stop bits, odd parity				9 hex
					8,2,N: 8-bit data, 2 stop bits, no parity				A hex
					8,1,E: 8-bit data, 1 stop bit, even parity				C hex
					8,1,O: 8-bit data, 1 stop bit, odd parity				D hex
					8,1,N: 8-bit data, 1 stop bit, no parity				E hex
		2-5-3	Response Timeout	50: 50 × 100 ms = 5 s	50: 50 × 100 ms = 5 s	Every cycle	167 (CP1L M-type CPU Unit)	08 to 15	00 hex
					1: 1 × 100 ms				01 hex
					:				:
					255: 255 × 100 ms				FF hex

	Name		Default	Settings	When setting is read by CPU Unit	Internal address	Bits	Settings
2	2-6	PC Link (Slave)						
	2-6-1	Baud	9,600 bps (disabled)	38,400 (standard)	Every cycle	161 (CP1L M-type CPU Unit)	00 to 07	00 hex
				115,200 (high speed)				0A hex
	2-6-2	PC Link Unit No.	0	0	Every cycle	167 (CP1L M-type CPU Unit)	00 to 03	0 hex
				:				:
				7				7 hex
	2-7	PC Link (Master)						
	2-7-1	Baud	9,600 bps (disabled)	38,400 (standard)	Every cycle	161 (CP1L M-type CPU Unit)	00 to 07	00 hex
				115,200 (high speed)				0A hex
	2-7-2	Link Words	10 (default)	1 : 10 (default)	Every cycle	166 (CP1L M-type CPU Unit)	04 to 07	1 hex : 0 or A hex
	2-7-3	PC Link Mode	ALL	ALL	Every cycle	166 (CP1L M-type CPU Unit)	15	0
				Masters				1

Peripheral Service Settings

Set Time to All Events: Time Setting for Services

	Name		Default	Settings	When setting is read by CPU Unit	Internal address	Bits	Settings
1	Set time to all events		Default	Default (4% of cycle time)	At start of operation	218	15	0
				Use user setting.				1
	1-1	Time allocated to services	0: 0 × 0.1 ms = 0 ms	0: 0 × 0.1 ms = 0 ms	At start of operation	218	00 to 07	00 hex
				:				:
				255: 255 × 0.1 ms				FF hex

Built-in Input Settings

High Speed Counter Settings

	Name			Default	Settings	When setting is read by CPU Unit	Internal address	Bits	Settings
1	Use high speed counter 0			Do not use.	Do not use.	When power is turned ON	50	12 to 15	0 hex
					Use.				1 hex
	1-1	Counting mode		Linear mode	Linear mode	At start of operation	50	08 to 11	0 hex
					Circular mode				1 hex
		1-1-1	Circular Max. Count	0	0	At start of operation	52 and 51	00 to 15	0000 0000 hex
					:				:
					4,294,967,295				FFFF FFFF hex
	1-2	Reset		Z phase, software reset	Z phase, software reset	When power is turned ON	50	04 to 07	0 hex
					Software reset				1 hex
					Z phase, software reset (comparing)				2 hex
					Software reset (comparing)				3 hex
	1-3	Input Setting		Differential phase input	Differential phase input	When power is turned ON	50	00 to 03	0 hex
					Pulse + direction input				1 hex
					Up/Down input				2 hex
					Increment pulse input				3 hex
2	Use high speed counter 1			Do not use.	Do not use.	When power is turned ON	53	12 to 15	0 hex
					Use.				1 hex
	2-1	Counting mode		Linear mode	Linear mode	At start of operation	53	08 to 11	0 hex
					Circular mode				1 hex
		2-1-1	Circular Max. Count	0	0	At start of operation	55 and 54	00 to 15	0000 0000 hex
					:				:
					4,294,967,295				FFFF FFFF hex
	2-2	Reset		Z phase, software reset	Z phase, software reset	When power is turned ON	53	04 to 07	0 hex
					Software reset				1 hex
					Z phase, software reset (comparing)				2 hex
					Software reset (comparing)				3 hex
	2-3	Input Setting		Differential phase input	Differential phase input	When power is turned ON	53	00 to 03	0 hex
					Pulse + direction input				1 hex
					Up/Down input				2 hex
					Increment pulse input				3 hex

	Name			Default	Settings	When setting is read by CPU Unit	Internal address	Bits	Settings
3	Use high speed counter 2			Do not use.	Do not use.	When power is turned ON	95	12 to 15	0 hex
					Use.				1 hex
	3-1	Counting mode		Linear mode	Linear mode	At start of operation	95	08 to 11	0 hex
					Circular mode				1 hex
		3-1-1	Circular Max. Count	0	0	At start of operation	97 and 96	00 to 15	0000 0000 hex
					:				:
					4,294,967,295				FFFF FFFF hex
	3-2	Reset		Z phase, software reset	Z phase, software reset	When power is turned ON	95	04 to 07	0 hex
					Software reset				1 hex
					Z phase, software reset (comparing)				2 hex
					Software reset (comparing)				3 hex
	3-3	Input Setting		Differential phase input	Differential phase input	When power is turned ON	95	00 to 03	0 hex
					Pulse + direction input				1 hex
					Up/Down input				2 hex
					Increment pulse input				3 hex
4	Use high speed counter 3			Do not use.	Do not use.	When power is turned ON	98	12 to 15	0 hex
					Use.				1 hex
	4-1	Counting mode		Linear mode	Linear mode	At start of operation	98	08 to 11	0 hex
					Circular mode				1 hex
		4-1-1	Circular Max. Count	0	0	At start of operation	100 and 99	00 to 15	0000 0000 hex
					:				:
					4,294,967,295				FFFF FFFF hex
	4-2	Reset		Z phase, software reset	Z phase, software reset	When power is turned ON	98	04 to 07	0 hex
					Software reset				1 hex
					Z phase, software reset (comparing)				2 hex
					Software reset (comparing)				3 hex
	4-3	Input Setting		Differential phase input	Differential phase input	When power is turned ON	98	00 to 03	0 hex
					Pulse + direction input				1 hex
					Up/Down input				2 hex
					Increment pulse input				3 hex

Interrupt Input Settings

	Name	Default	Settings	When setting is read by CPU Unit	Internal address	Bits	Settings
1	IN0 (CIO 0.04)	Normal	Normal	When power is turned ON	60	00 to 03	0 hex
			Interrupt				1 hex
			Quick				2 hex
2	IN1 (CIO 0.05)	Normal	Normal	When power is turned ON	60	04 to 07	0 hex
			Interrupt				1 hex
			Quick				2 hex
3	IN2 (CIO 0.06)	Normal	Normal	When power is turned ON	60	08 to 11	0 hex
			Interrupt				1 hex
			Quick				2 hex
4	IN3 (CIO 0.07)	Normal	Normal	When power is turned ON	60	12 to 15	0 hex
			Interrupt				1 hex
			Quick				2 hex
5	IN4 (CIO 0.08)	Normal	Normal	When power is turned ON	59	00 to 03	0 hex
			Interrupt				1 hex
			Quick				2 hex
6	IN5 (CIO 0.09)	Normal	Normal	When power is turned ON	59	04 to 07	0 hex
			Interrupt				1 hex
			Quick				2 hex

Pulse Output 0 Settings

Base Settings

	Name	Default	Settings	When setting is read by CPU Unit	Internal address	Bits	Settings
1	Undefined Origin (operation for limit signal turning ON)	Hold	Hold	At start of operation	268	12 to 15	0 hex
			Undefined				1 hex
2	Limited Input Signal Operation	Search Only	Search Only	When power is turned ON	256	04 to 07	0 hex
			Always				1 hex
3	Limit Input Signal	NC	NC	At start of operation	268	00 to 03	0 hex
			NO				1 hex
4	Search/Return Initial Speed	0 pps	0 pps	At start of operation	259 and 258	00 to 15	0000 0000 hex
			:				:
			100,000 pps				0001 86A0 hex 000F 4240 hex
5	Speed Curve	Trapezium	Trapezium	When power is turned ON	256	12 to 15	0 hex
			S-shaped				1 hex

Define Origin Operation Settings: Origin Search Settings

	Name		Default	Settings	When setting is read by CPU Unit	Internal address	Bits	Settings
1	Use define origin operation		Do not use.	Do not use.	When power is turned ON	256	00 to 03	0 hex
				Use.				1 hex
	1-1	Search Direction	CW	CW	At start of operation	257	12 to 15	0 hex
				CCW				1 hex
	1-2	Detection Method	Method 0	Method 0	At start of operation	257	08 to 11	0 hex
				Method 1				1 hex
				Method 2				2 hex
	1-3	Search Operation	Inverse 1	Inverse 1	At start of operation	257	04 to 07	0 hex
				Inverse 2				1 hex
	1-4	Operation Mode	Mode 0	Mode 0	At start of operation	257	00 to 03	0 hex
				Mode 1				1 hex
				Mode 2				2 hex
	1-5	Origin Input Signal (X/XA CPU Units)	NC	NC	Unit version 1.0 and earlier: At start of operation Unit version 1.1 and later: When power is turned ON	268	08 to 11	0 hex
				NO				1 hex
		Origin Input Signal (Y CPU Units)		NC (line driver)	At start of operation			2 hex
				NO (line driver)				3 hex
	1-6	Proximity Input Signal	NC	NC	At start of operation	268	04 to 07	0 hex
				NO				1 hex
	1-7	Search High Speed	0 pps (disabled)	1 pps	At start of operation	261 and 260	00 to 15	0000 0001 hex
				:				:
				100,000 pps				0001 86A0 hex 000F 4240 hex
	1-8	Search Proximity Speed	0 pps (disabled)	1 pps	At start of operation	263 and 262	00 to 15	0000 0001 hex
				:				:
				100,000 pps				0001 86A0 hex 000F 4240 hex
	1-9	Search Compensation Value	0 pps	−2,147,483,648	At start of operation	265 and 264	00 to 15	8000 0000 hex
				:				:
				0				0000 0000 hex
				:				:
				+2,147,483,647				7FFF FFFF hex
	1-10	Search Acceleration Ratio	0 (disabled)	1 (pulses/4 ms)	At start of operation	266	00 to 15	0001 hex
				:				:
				65,535 (pulses/4 ms)				FFFF hex
	1-11	Search Deceleration Ratio	0 (disabled)	1 (pulses/4 ms)	At start of operation	267	00 to 15	0001 hex
				:				:
				65,535 (pulses/4 ms)				FFFF hex
	1-12	Positioning Monitor Time	0 ms	0 ms	At start of operation	269	00 to 15	0000 hex
				:				:
				9,999 ms				270F hex

Origin Return Settings

	Name	Default	Settings	When setting is read by CPU Unit	Internal address	Bits	Settings
1	Speed	0 pps (disabled)	1 pps	At start of operation	271 and 270	00 to 15	0000 0001 hex
			:				:
			100,000 pps				0001 86A0 hex 000F 4240 hex
2	Acceleration Ratio	0 (disabled)	1 (pulses/4 ms)	At start of operation	272	00 to 15	0001Hex
			:				:
			65535 (pulses/4 ms)				FFFF hex
3	Deceleration Ratio	0 (disabled)	1 (pulses/4 ms)	At start of operation	273	00 to 15	0001 hex
			:				:
			65535 (pulses/4 ms)				FFFF hex

Pulse Output 1 Settings

Base Settings

	Name	Default	Settings	When setting is read by CPU Unit	Internal address	Bits	Settings
1	Undefined Origin (operation for limit signal turning ON)	Hold	Hold	At start of operation	286	12 to 15	0 hex
			Undefined				1 hex
2	Limited Input Signal Operation	Search Only	Search Only	When power is turned ON	274	04 to 07	0 hex
			Always				1 hex
3	Limit Input Signal	NC	NC	At start of operation	286	00 to 03	0 hex
			NO				1 hex
4	Search/Return Initial Speed	0 pps	0 pps	At start of operation	277 and 276	00 to 15	0000 0000 hex
			:				:
			100,000 pps				0001 86A0 hex 000F 4240 hex
5	Speed Curve	Trapezium	Trapezium	When power is turned ON	274	12 to 15	0 hex
			S-shaped				1 hex

Define Origin Operation Settings: Origin Search Settings

	Name		Default	Settings	When setting is read by CPU Unit	Internal address	Bits	Settings
1	Use define origin operation		Do not use.	Do not use.	When power is turned ON	274	00 to 03	0 hex
				Use.				1 hex
	1-1	Search Direction	CW	CW	At start of operation	275	12 to 15	0 hex
				CCW				1 hex
	1-2	Detection Method	Method 0	Method 0	At start of operation	275	08 to 11	0 hex
				Method 1				1 hex
				Method 2				2 hex
	1-3	Search Operation	Inverse 1	Inverse 1	At start of operation	275	04 to 07	0 hex
				Inverse 2				1 hex
	1-4	Operation Mode	Mode 0	Mode 0	At start of operation	275	00 to 03	0 hex
				Mode 1				1 hex
				Mode 2				2 hex
	1-5	Origin Input Signal (X/XA CPU Units)	NC	NC	Unit version 1.0 and earlier: At start of operation Unit version 1.1 and later: When power is turned ON	286	08 to 11	0 hex
				NO				1 hex
		Origin Input Signal (Y CPU Units)		NC (line driver)	At start of operation			2 hex
				NO (line driver)				3 hex
	1-6	Proximity Input Signal	NC	NC	At start of operation	286	04 to 07	0 hex
				NO				1 hex
	1-7	Search High Speed	0 pps (disabled)	1 pps	At start of operation	279 and 278	00 to 15	0000 0001 hex
				:				:
				100,000 pps				0001 86A0 hex 000F 4240 hex
	1-8	Search Proximity Speed	0 pps (disabled)	1 pps	At start of operation	281 and 280	00 to 15	0000 0001 hex
				:				:
				100,000 pps				0001 86A0 hex 000F 4240 hex
	1-9	Search Compensation Value	0 pps	−2,147,483,648	At start of operation	283 and 282	00 to 15	8000 0000 hex
				:				:
				0				0000 0000 hex
				:				:
				+2,147,483,647				7FFF FFFF hex
	1-10	Search Acceleration Ratio	0 (disabled)	1 (pulses/4 ms)	At start of operation	284	00 to 15	0001 hex
				:				:
				65,535 (pulses/4 ms)				FFFF hex
	1-11	Search Deceleration Ratio	0 (disabled)	1 (pulses/4 ms)	At start of operation	285	00 to 15	0001 hex
				:				:
				65,535 (pulses/4 ms)				FFFF hex
	1-12	Positioning Monitor Time	0 ms	0 ms	At start of operation	287	00 to 15	0000 hex
				:				:
				9,999 ms				270F hex

Origin Return Settings

	Name	Default	Settings	When setting is read by CPU Unit	Internal address	Bits	Settings
1	Speed	0 pps (disabled)	1 pps	At start of operation	289 and 288	00 to 15	0000 0001 hex
			:				:
			100,000 pps				0001 86A0 hex 000F 4240 hex
2	Acceleration Ratio	0 (disabled)	1 (pulses/4 ms)	At start of operation	290	00 to 15	0001Hex
			:				:
			65535 (pulses/4 ms)				FFFF hex
3	Deceleration Ratio	0 (disabled)	1 (pulses/4 ms)	At start of operation	291	00 to 15	0001 hex
			:				:
			65535 (pulses/4 ms)				FFFF hex

Inverter Positioning 0

Basic Settings

	Name	Default	Settings	When setting is read by CPU Unit	Internal address	Bits	Settings
1	Use inverter positioning	Do not use	Use	When power is turned ON	416	00 to 03	0 hex
			Do not use				1 hex
2	Gain	0: 10 (0.1 increments)	0: 10 (0.1 increments)	When power is turned ON	418	00 to 15	0000 hex
			1 (0.1 increments)				0001 hex
			:				:
			65,535 (0.1 increments)				FFFF hex
3	In-position range	0: 1	0: 1	When power is turned ON	419	00 to 15	0000 hex
			1				0001 hex
			:				:
			65,535				FFFF hex
4	Min. output value	0: 1	0: 1	When power is turned ON	420	00 to 15	0000 hex
			1				0001 hex
			:				:
			65,535				FFFF hex
5	Max. output value	0: 2,000,000	0: 2,000,000	When power is turned ON	421, 422	00 to 15	00000000 hex
			1				00000001 hex
			:				:
			4,294,967,295				FFFFFFFF hex
6	Error counter overflow detection value	0: 10,000	0: 10,000	When power is turned ON	423	00 to 15	0000 hex
			1				0001 hex
			:				:
			32,767				7FFF hex
7	Error counter alarm detection value	0: 10,000	0: 10,000	When power is turned ON	424	00 to 15	0000 hex
			1				0001 hex
			:				:
			32,767				7FFF hex

	Name	Default	Settings	When setting is read by CPU Unit	Internal address	Bits	Settings
8	Error counter cycle	0: 3 (4-ms increments)	0: 3 (4-ms increments)	When power is turned ON	417	00 to 07	00 hex
			1 (4-ms increments)				01 hex
			:				:
			255 (4-ms increments)				FF hex
9	Power Supply Freq. for One Motor Revolution per Sec.	0 (0.1-Hz increments)	0 (0.1-Hz increments)	When power is turned ON	436	00 to 15	0000 hex
			:				:
			65,535 Hz (0.1-Hz increments)				FFFF hex
10	Number of Encoder Pulses for One Motor Revolution	0	0	When power is turned ON	437	00 to 15	0000 hex
			:				:
			65,535				FFFF hex

Operation Adjustment Settings

	Name	Default	Settings	When setting is read by CPU Unit	Internal address	Bits	Settings
1	Limit output during acceleration and constant speed	Do not use	Use	When power is turned ON	432	00 to 03	0 hex
			Do not use				1 hex
2	Limit output during deceleration and when stopped	Do not use	Use	When power is turned ON	432	04 to 07	0 hex
			Do not use				1 hex
3	Output coefficient during acceleration and constant speed	0: 6 (0.01 increments)	0: 6 (0.01 increments)	When power is turned ON	433	00 to 07	0 hex
			1 (0.01 increments)				1 hex
			:				:
			255 (0.01 increments)				FF hex
4	Output coefficient during deceleration	0: 96 (0.01 increments)	0: 96 (0.01 increments)	When power is turned ON	434	00 to 07	0 hex
			1 (0.01 increments)				1 hex
			:				:
			255 (0.01 increments)				FF hex
5	Output coefficient after pulse output	0: 50 (0.01 increments)	0: 50 (0.01 increments)	When power is turned ON	435	00 to 07	0 hex
			1 (0.01 increments)				1 hex
			:				:
			255 (0.01 increments)				FF hex

Inverter Positioning 1

Basic Settings

	Name	Default	Settings	When setting is read by CPU Unit	Internal address	Bits	Settings
1	Use inverter positioning	Do not use	Use	When power is turned ON	416	08 to 11	0 hex
			Do not use				1 hex
2	Gain	0: 10 (0.1 increments)	0: 10 (0.1 increments)	When power is turned ON	425	00 to 15	0000 hex
			1 (0.1 increments)				0001 hex
			:				:
			65,535 (0.1 increments)				FFFF hex

	Name	Default	Settings	When setting is read by CPU Unit	Internal address	Bits	Settings
3	In-position range	0: 1	0: 1	When power is turned ON	426	00 to 15	0000 hex
			1				0001 hex
			:				:
			65,535				FFFF hex
4	Min. output value	0: 1	0: 1	When power is turned ON	427	00 to 15	0000 hex
			1				0001 hex
			:				:
			65,535				FFFF hex
5	Max. output value	0: 2,000,000	0: 2,000,000	When power is turned ON	429, 428	00 to 15	00000000 hex
			1				00000001 hex
			:				:
			4,294,967,295				FFFFFFFF hex
6	Error counter overflow detection value	0: 10,000	0: 10,000	When power is turned ON	430	00 to 15	0000 hex
			1				0001 hex
			:				:
			32,767				7FFF hex
7	Error counter alarm detection value	0: 10,000	0: 10,000	When power is turned ON	431	00 to 15	0000 hex
			1				0001 hex
			:				:
			32,767				7FFF hex
8	Error counter cycle	0: 3 (4-ms increments)	0: 3 (4-ms increments)	When power is turned ON	417	00 to 07	00 hex
			1 (4-ms increments)				01 hex
			:				:
			255 (4-ms increments)				FF hex
9	Power Supply Freq. for One Motor Revolution per Sec.	0 (0.1-Hz increments)	0 (0.1-Hz increments)	When power is turned ON	438	00 to 15	0000 hex
			:				:
			65,535 Hz (0.1-Hz increments)				FFFF hex
10	Number of Encoder Pulses for One Motor Revolution	0	0	When power is turned ON	439	00 to 15	0000 hex
			:				:
			65,535				FFFF hex

Operation Adjustment Settings

	Name	Default	Settings	When setting is read by CPU Unit	Internal address	Bits	Settings
1	Limit output during acceleration and constant speed	Do not use	Use	When power is turned ON	432	08 to 11	0 hex
			Do not use				1 hex
2	Limit output during deceleration and when stopped	Do not use	Use	When power is turned ON	432	12 to 15	0 hex
			Do not use				1 hex
3	Output coefficient during acceleration and constant speed	0: 6 (0.01 increments)	0: 6 (0.01 increments)	When power is turned ON	433	08 to 15	0 hex
			1 (0.01 increments)				1 hex
			:				:
			255 (0.01 increments)				FF hex

	Name	Default	Settings	When setting is read by CPU Unit	Internal address	Bits	Settings
4	Output coefficient during deceleration	0: 96 (0.01 increments)	0: 96 (0.01 increments)	When power is turned ON	434	08 to 15	0 hex
			1 (0.01 increments)				1 hex
			:				:
			255 (0.01 increments)				FF hex
5	Output coefficient after pulse output	0: 50 (0.01 increments)	0: 50 (0.01 increments)	When power is turned ON	435	08 to 15	0 hex
			1 (0.01 increments)				1 hex
			:				:
			255 (0.01 increments)				FF hex

Appendix H
Specifications for External Power Supply Expansion

When using the external power supply for AC-power-supply CPU Units, the following limitations apply:

- **30-point, 40-point and 60-point AC-power-supply CPU Units (Model CP1L-M□□DR-A)**

  The external power supply for the 30-point, 40-point and 60-point AC-power-supply CPU Units (Model CP1L-M□□DR-A) can be used beyond 300mA within the capacity range of the power supply built in the CPU Units.

Please calculate the usable capacity of external power supply according to the following example.

Calculation example of the capacity limit of external power supply

Example 1

	CPU Units	Expansion (I/O) Units			Total	Limit
		1st unit	2nd unit	3rd unit		
	Model CP1L-M40DR-A	Model CP1W-DA041	Model CP1W-DA041	Model CP1W-DA041		
5V	0.22A	0.08A	0.08A	0.08A	0.46A	≤1.2A
24V	0.08A	0.124A	0.124A	0.124A	0.452A	≤0.7A
Power consumption	5V×0.46A=2.3W 24V×0.452A=10.848W				Total 13.148W	≤18.5W
Usable capacity of external power supply	18.5W (Total of usable power consumption)-13.148W=5.352W 5.352W/24V=0.223A				0.223A	≤0.7A

Example 2

	CPU Units	Expansion (I/O) Units			Total	Limit
		1st unit	2nd unit	3rd unit		
	Model CP1L-M40DR-A	Model CP1W-20EDT	None	None		
5V	0.22A	0.130A	0.0A	0.0A	0.35A	≤1.2A
24V	0.08A	0.0A	0.0A	0.0A	0.08A	≤0.7A
Power consumption	5V×0.35A=1.75W 24V×0.08A=1.92W				Total 3.67W	≤18.5W
Usable capacity of external power supply	18.5W (Total of usable power consumption)-3.67W=14.83W 14.83W/24V=0.618A				0.618A	≤0.7A

- **10-point, 14-point and 20-point AC-power-supply CPU Units (Model CP1L-L□□DR-A)**
  The external power supply for 10-point AC-power-supply CPU Units (Model CP1L-L□□DR-A) as well as 14-point and 20-point power-supply CPU Units manufactured since May 2008 (Model CP1L-L□□DR-A) can be used beyond 200mA within the capacity range of the power supply built in the CPU Units.

Please calculate the usable capacity of external power supply according to the following example.

Calculation example of the capacity limit of external power supply

Example 1

	CPU Units	Expansion (I/O) Units			Total	Limit
		1st unit	2nd unit	3rd unit		
	Model CP1L-M20DR-A	Model CP1W-DA041	Disabled	Disabled		
5V	0.20A	0.08A	0.0A	0.0A	0.28A	≤0.85A
24V	0.05A	0.124A	0.0A	0.0A	0.174A	≤0.35A
Power consumption	5V×0.28A=1.4W 24V×0.174A=4.176W				Total 5.576W	≤9.5W
Usable capacity of external power supply	18.5W (Total of usable power consumption)-5.576W=3.924W 3.924W/24V=0.163A				0.163A	≤0.35A

Example 2

	CPU Units	Expansion (I/O) Units			Total	Limit
		1st unit	2nd unit	3rd unit		
	Model CP1L-M14DR-A	None	Disabled	Disabled		
5V	0.18A	0.0A	0.0A	0.0A	0.18A	≤0.85A
24V	0.04A	0.0A	0.0A	0.0A	0.04A	≤0.35A
Power consumption	5V×0.18A=0.9W 24V×0.04A=0.96W				Total 1.860W	≤9.5W
Usable capacity of external power supply	18.5W (Total of usable power consumption)-1.860W=7.64W 7.64W/24V=0.318A				0.318A	≤0.35A

For 14-point and 20-point AC-power-supply CPU Units manufactured before May 2008, the specifications are as written in the section *1-2-3 Restrictions on System Configuration*.

Index

A

absolute coordinates
  selecting, 214
absolute pulse outputs, 214
Access Error Flag, 171
addresses
  memory map, 713
Always OFF Flag, 172
Always ON Flag, 172
applications
  precautions, xxvii
Auxiliary Area, 155
  read/write section, 695, 707
  read-only section, 665

B

background execution
  special flags, 662
backup
  precautions, xxvi
Basic I/O Units
  error information, 654
battery
  error flag, 654, 691
  precautions, xxix
  service life, 624
Battery Error Flag, xxvi, 691
bit allocations
  PWM(891) outputs, 250

C

Carry Flag, 172
CIO Area, 139
clock
  clock data, 655, 686
clock pulses
  flags, 173
communications
  Communications Port Enabled Flags, 710
  flags, 659
  no-protocol, 369
Communications Port Enabled Flags, 710
complete link method, 378
Condition Flag
  saving and loading status, 173
Condition Flags, 171
connectors
  recommended models, 567
coordinate systems (absolute or relative), 215
Counter Area, 157
countermeasures
  noise, xxxi
CPU Unit
  initialization, 84
cycle time
  flags, 650
  maximum cycle time, 92, 650, 674
  present cycle time, 92, 650, 674
  setting, 92
Cycle Time Too Long Flag, 654, 690

D

data areas
  overview, 139
data links, 153
Data Registers, 169
data registers
  sharing, 142
data tracing, 602
  related flags/bits, 651
dates
  program and parameters, 411
debugging, 598
  flags, 651
DeviceNet
  precaution, 417
differential phase mode
  details, 178
DIP switch
  pin 6 status, 643
direction
  automatic direction selection, 217

E

EC Directives, xxx
electromagnetic fields, xxvi
EMC Directives, xxx
Equals Flag, 172

error codes, 709
  pulse output stop error codes, 233
Error Flag, 171
error log, 708
Error Log Area, 617, 652, 672, 708
errors
  basic I/O errors, 662
  communications error flags, 659
  error codes, 709
  error log, 652, 708
  failure point detection, 415
  FAL/FALS flags, 653
  flags, 171
  flash memory, 652
  Input Units, 618
  memory error flags, 652
  Output Units, 619
  PLC Setup errors, 662
  programming error flags, 662
  Special I/O Units, 662
  troubleshooting, 605

F

failure point detection, 415
FAL Error Flag, 653
FAL errors
  flag, 692
FAL/FALS Number for System Error Simulation, 653
FALS Error Flag, 653
FALS errors
  flag, 653, 655, 690, 691
FALS instruction, xxv, xxix
FINS commands
  list, 393
First Cycle Flag, 650, 672, 709
flash memory
  data dates, 656
  errors, 652
Flash Memory Error, 652
flowchart
  overall CPU operation, 81
Forced Status Hold Bit, 643, 695
force-resetting bits
  debugging, 598
force-setting bits
  debugging, 598
frequency
  frequency measurement, 196

G

Gate Bit
  high-speed counters, 195
Greater Than Flag, 172
Greater Than or Equals Flag, 172

H

High-speed Counter Gate Bit, 195
high-speed counter inputs
  reset methods, 181
  restrictions, 193
Holding Area, 152, 154
Host Link
  ports, 715
Host Link commands, 391
Host Link communications, 389
hot starting, 143
hot stopping, 143

I

I/O Hold Bit, xxix
I/O interrupts
  response time, 96
I/O memory
  addresses, 713
  areas, 714
  effects of operating mode changes, 86
I/O response time
  calculating, 95
immediate refreshing
  input bits and words, 83
increment mode
  details, 179
index register
  sharing, 168
index registers, 161
  sharing, 142
indirect addressing
  DM Area, 160
  index registers, 161

Initial Task Execution Flag, 650
Initial Task Flag, 709
Initial Task Startup Flag, 672
initialization
  CPU Unit, 84
Input Units
  troubleshooting, 618
inspection
  procedures, 622
installation
  location, xxvi
interrupt feeding
  ladder program, 279
Interrupt Input Units
  response time, 96
interrupts
  processing times, 651
IOM Hold Bit, 144, 643, 695
IORF(097) refreshing
  input bits and words, 83
IR/DR Operation between Tasks, 651

L

Less Than Flag, 172
Less Than or Equals Flag, 172
Limit Input Signal Type, 232
linear mode counting
  details, 180
Low Voltage Directive, xxx

M

maintenance
  procedures, 624
memory
  memory map, 714
  See also data areas
Memory Error Flag, 652, 691
momentary power interruption, 87
MONITOR mode, 85
monitoring
  differential monitoring, 599
multiple progressive positioning
  ladder program, 264
  wiring example, 261

N

Negative Flag, 172
networks
  related flags/bits, 659
noise, xxvi
  reducing, xxx
no-protocol communications, 369
Not Equal Flag, 172
NT Link
  ports, 715

O

online editing, 600
  effect on cycle time, 94
  Online Editing Flags, 672
  Online Editing Wait Flag, 710
  related flags/bits, 651
operating environment, xxvi
  precautions, xxvi
operating modes
  description, 85
  effects of mode changes on counters, 158
operation
  debugging, 598
  trial operation, 598
Origin Compensation, 231
Origin Detection Method, 227
Origin Input Signal Type, 232
Origin Proximity Input Signal Type, 232
origin return function
  details, 220
  examples, 237
Origin Return Parameters, 238
origin search
  executing, 232
Origin Search Acceleration Rate, 231
Origin Search Deceleration Rate, 231
Origin Search Direction
  specifying, 231
origin search function
  details, 220
Origin Search High Speed, 231
Origin Search Operation Setting, 227
Origin Search Parameters, 224
Origin Search Proximity Speed, 231
Origin Search/Return Initial Speed, 231

origin status
operations affecting, 216
Output, 218
Output OFF Bit, 651, 695
Output Units
troubleshooting, 619
outputs
precautions, xxv, xxix
Overflow Flag, 172

P

Parameter Date, 411, 419, 656
parts
replacing parts, 624
peripheral port
related flags/bits, 689
PLC Setup
error information, 654
Polled Units
settings, 382
Polling Unit
setting, 382
Polling Unit link method, 378
positioning
vertically conveying PCBs, 260
Positioning Monitor Time, 232
power interruptions
information, 656, 696
momentary interruptions, 87
power OFF processing, 87
power supply, xxvi
precautions, xxix
precautions, xxiii
applications, xxvii
general, xxiv
handling precautions, 623
operating environment, xxvi
periodic inspections, 622
safety, xxiv
Program Error Flag, 690
program errors, 711
PROGRAM mode, 85
program transfer, 598
programming
error flag, 690
program error information, 653
program errors, 711
program protection, 411
protecting the program, 411
transferring the program, 598
pulse + direction mode
details, 178
pulse frequency conversion, 197
pulse input modes
details, 178
Pulse Output 0 settings
speed curve, 219
pulse output modes, 200
pulse output stop error codes, 233
pulse outputs, 198
PWM(891) outputs
bit allocations, 250
details, 250

Q

quick-response inputs
details, 362

R

radioactivity, xxvi
read/write-protection, 412
refreshing
immediate refreshing, 83
IORF(097), 83
refreshing data, 378
relative coordinates
selecting, 214
reset methods, 181
Restart Bits
peripheral port, 659
RS-232C port, 660
ring mode counting
details, 180
RS-232C port
related flags/bits, 659, 660, 687, 688
RUN mode, 85

S

safety precautions, xxiv
scheduled interrupts
response time, 97

S-curve acceleration/deceleration
output pattern, 218
restrictions, 219
self-maintaining bits, 154
serial communications
functions, 366
Serial PLC Links, 378
allocated words, 381
PLC Setup, 382
related flags, 383, 385
simulating system errors, 653
software reset, 181
Special I/O Units
error information, 662
specifications
PWM(891) output, 250
startup
hot starting and stopping, 143
static electricity, xxvi
Step Flag, 672
stocker, 260

T

target value comparison
for interrupt tasks, 194
Task Error Flag, 681
Task Flags, 171
Task Started Flag, 650
tasks
related flags/bits, 651
See also interrupt tasks
Task Flags, 171
Timer Area, 156
TR Area, 155
tracing
See also data tracing
trial operation, 598
troubleshooting, 605
twisted-pair cables
recommended models, 567
two-axis multipoint positioning
ladder program, 272
wiring example, 267

U

Underflow Flag, 172
up/down mode
details, 179
User Program Date, 411, 419, 656

V

variable duty ratio pulse outputs
details, 250
vertical conveyor, 260

W

Work Area, 153
work bits, 153
work words, 153
write-protection, 411

Revision History

A manual revision code appears as a suffix to the catalog number on the front cover of the manual.

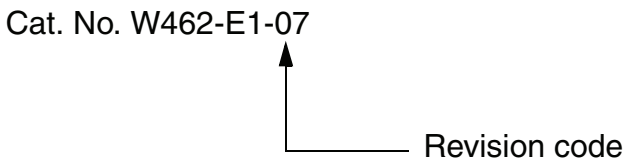

The following table outlines the changes made to the manual during each revision. Page numbers refer to the previous version.

Revision code	Date	Revised content
01	May 2007	Original production
02	June 2007	Errors were corrected.
03	April 2008	Information on CP1L CPU Units with 10 or 60 I/O points, CP1W Expansion I/O Units with 16 or 32 I/O points and LCD Option Board were added.
04	June 2008	Errors were corrected.
05	August 2008	CP1W-CIF12 added for Serial Communications Option Board. Errors were corrected.
06	March 2009	Information added on Ethernet Option Board.
07	May 2010	CP1W-DA021 added for CP-series Expansion Units. Unit version 2.0 added for CP1W-CIF41 Ethernet Option Board. Errors were corrected.

OMRON Corporation **Industrial Automation Company**
Tokyo, JAPAN
Contact: www.ia.omron.com

Regional Headquarters
OMRON EUROPE B.V.
Wegalaan 67-69-2132 JD Hoofddorp
The Netherlands
Tel: (31)2356-81-300/Fax: (31)2356-81-388

OMRON ELECTRONICS LLC
One Commerce Drive Schaumburg,
IL 60173-5302 U.S.A.
Tel: (1) 847-843-7900/Fax: (1) 847-843-7787

OMRON ASIA PACIFIC PTE. LTD.
No. 438A Alexandra Road # 05-05/08 (Lobby 2),
Alexandra Technopark,
Singapore 119967
Tel: (65) 6835-3011/Fax: (65) 6835-2711

OMRON (CHINA) CO., LTD.
Room 2211, Bank of China Tower,
200 Yin Cheng Zhong Road,
PuDong New Area, Shanghai, 200120, China
Tel: (86) 21-5037-2222/Fax: (86) 21-5037-2200

Authorized Distributor:

© OMRON Corporation 2009 All Rights Reserved.
In the interest of product improvement,
specifications are subject to change without notice.

Cat. No. W462-E1-07 0510